F.A.U. RTE.	SECTION	COUNTY	TOTAL SHEETS	SHEET NO.
0085	00-00246-02-FP	MCHENRY	292	072
STA.		TO STA.		
FED. ROAD DIST. NO. 1	ILLINOIS	FED. AID PROJECT		

CONTRACT NO: 63522

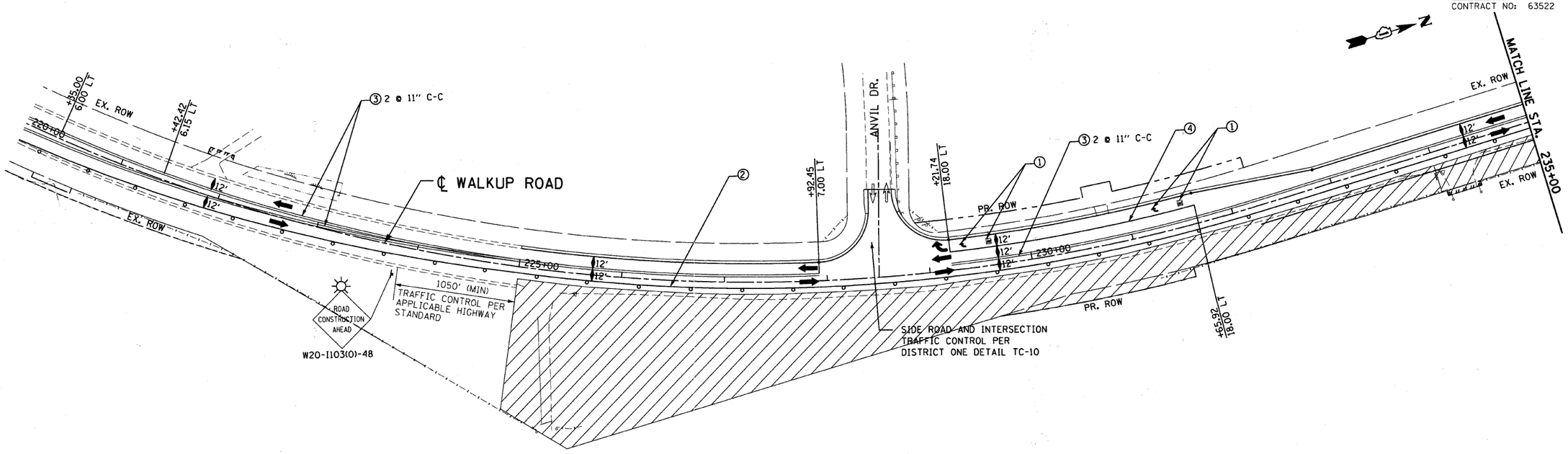

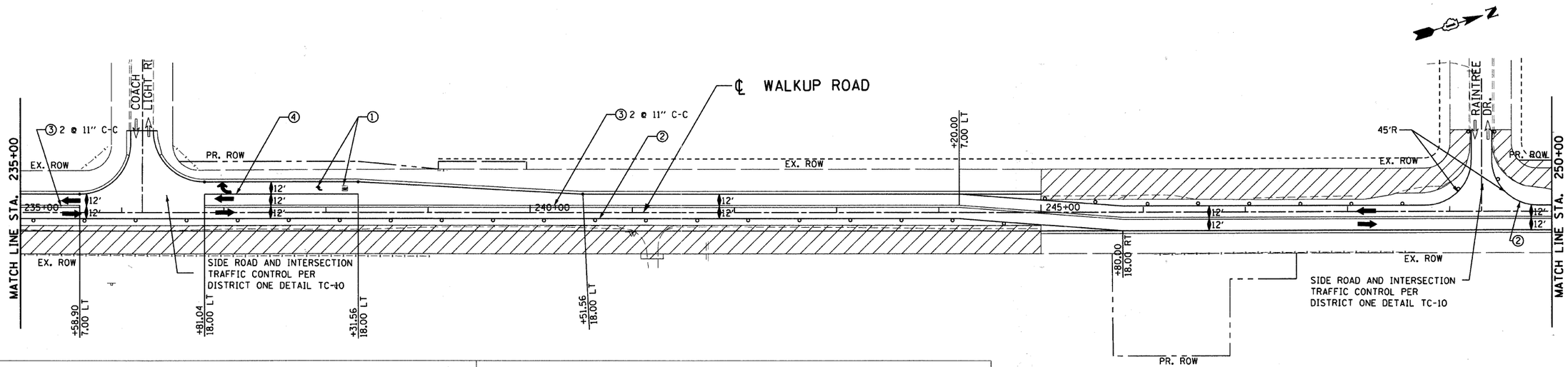

LEGEND

- WORK AREA
- TEMPORARY PAVEMENT
- TEMPORARY PAVEMENT FROM PREVIOUS STAGE
- BARRICADE, TYPE III, W/ TY A FLASHER
- PREVIOUS TRAFFIC PATTERN
- PR TRAFFIC PATTERN
- SIGN
- VERTICAL PANEL W/ STEADY BURNING LIGHT
- DRUMS WITH STEADY BURNING LIGHT @ 50' C-C
- TYPE B MONODIRECTIONAL FLASHING LIGHT

PAVEMENT MARKING LEGEND

1. TEMPORARY PAVEMENT MARKING LETTERS AND SYMBOLS
2. TEMPORARY PAVEMENT MARKING -LINE 4 Inch (WHITE)
3. TEMPORARY PAVEMENT MARKING -LINE 4 Inch (YELLOW)
4. TEMPORARY PAVEMENT MARKING -LINE 6 Inch (WHITE)
5. TEMPORARY PAVEMENT MARKING -LINE 8 Inch (YELLOW)
6. TEMPORARY PAVEMENT MARKING -LINE 12 Inch (YELLOW)
7. TEMPORARY PAVEMENT MARKING -LINE 24 Inch (WHITE)

REVISIONS	
NAME	DATE

MCHENRY COUNTY DIVISION OF TRANSPORTATION
WALKUP ROAD F.A.U. 0085

MOT & STAGE 2 CONSTRUCTION WALKUP ROAD STA 220+00 TO STA 250+00

SCALE: 1" = 50'
DRAWN BY: CC
DATE: 04/15/11
CHECKED BY: KA

TENG

TENG & ASSOCIATES, INC
ENGINEERS&ARCHITECTS&PLANNERS
205 N. MICHIGAN AVE. CHICAGO, IL 60601
TELEPHONE 312/616-0000

..\AL02A002.DGN, ..\PL02A002.DGN, ..\RW02A00LDGN, ..\MT02A002.DGN, ..\RW02A002.DGN, ..\MT02A002.DGN, ..\VR02A00LDGN, ..\B99IA00LDGN, ..\AL02A002.DGN
4:44:20AM,15JUL23 \\FS-0044\AMYVAULT\D-TRANS_DT\2223\300-03\CIVIL\CADD\2 CONTRACT\A TENG\SHEET\MT02A020.SHT STANKERJ
1 2 3 4 5 6 7 8 9 10 11 12 13 14 15 16 17 18 19 20 21 22 23 24 25 26 27 28 29 30 31 32 33 34 35 36 37 38 39 40 41 42 43 44 45 46 47 48 49 50 51 52 53 54 55 56 57 58 59 60 61 62 63