F.A.U. RTE.	SECTION	COUNTY	TOTAL SHEETS	SHEET NO.
0085	00-00246-02-FP	MCHENRY	292	186
STA.		TO STA.		
FED. ROAD DIST. NO. 1	ILLINOIS	FED. AID PROJECT		

CONTRACT NO: 63522

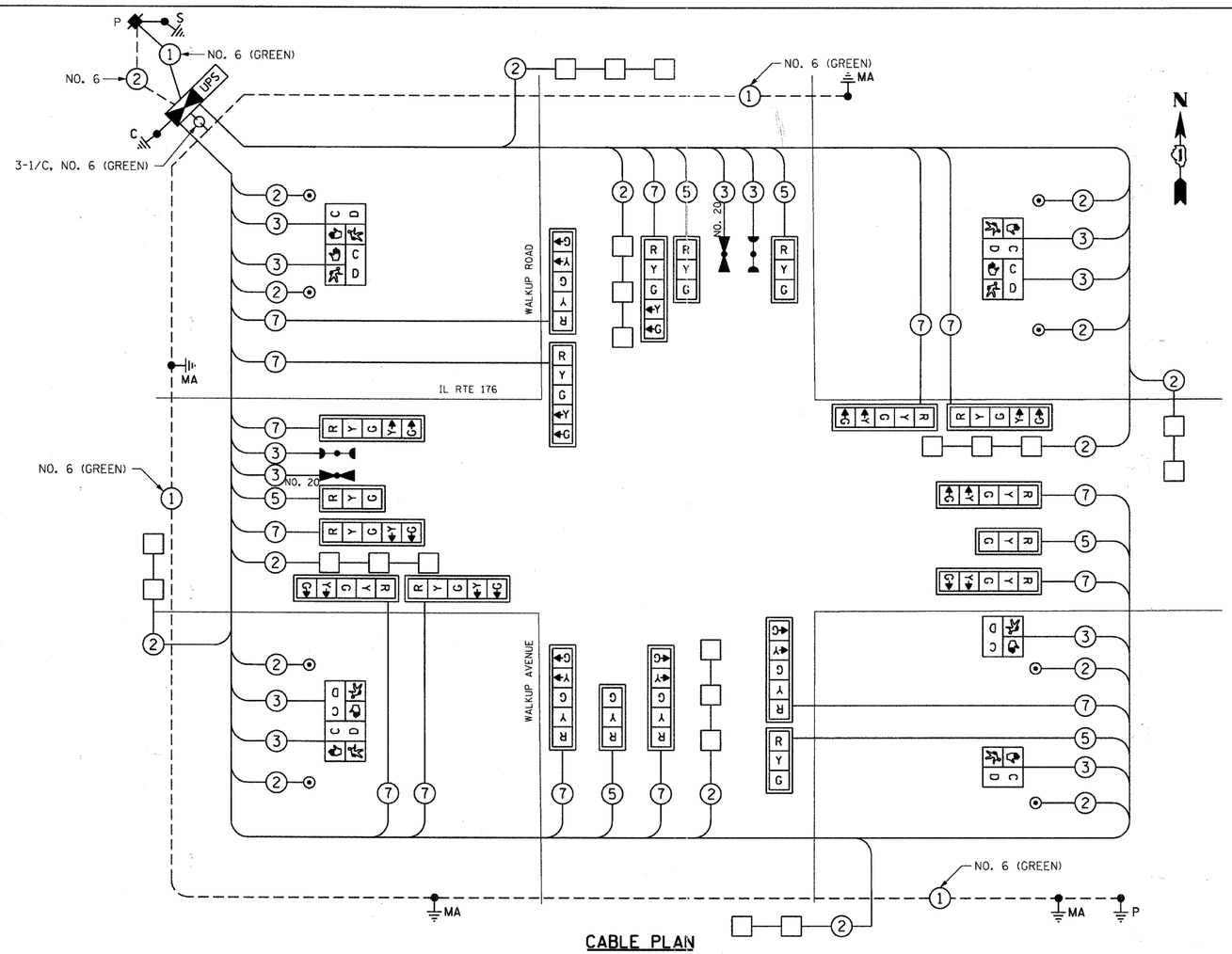

CABLE PLAN

SCHEDULE OF QUANTITIES		
PAY ITEM	UNIT	QUANTITY
SIGN PANEL-TYPE I	SQ. FT.	31.5
CONDUIT IN TRENCH, 2" DIA., GALVANIZED STEEL	FOOT	1038
CONDUIT IN TRENCH, 2 1/2" DIA., GALVANIZED STEEL	FOOT	28
CONDUIT IN TRENCH, 3" DIA., GALVANIZED STEEL	FOOT	20
CONDUIT IN TRENCH, 3 1/2" DIA., GALVANIZED STEEL	FOOT	65
CONDUIT IN TRENCH, 4" DIA., GALVANIZED STEEL	FOOT	90
CONDUIT PUSHED, 2" DIA., GALVANIZED STEEL	FOOT	242
CONDUIT PUSHED, 4" DIA., GALVANIZED STEEL	FOOT	472
HANDHOLE	EACH	6
HEAVY-DUTY HANDHOLE	EACH	4
DOUBLE HANDHOLE	EACH	2
TRENCH AND BACKFILL FOR ELECTRICAL WORK	FOOT	1193
FULL-ACTUATED CONTROLLER AND TYPE IV CABINET	EACH	1
ELECTRIC CABLE IN CONDUIT, SIGNAL NO. 14 2C	FOOT	1602
ELECTRIC CABLE IN CONDUIT, SIGNAL NO. 14 3C	FOOT	2078
ELECTRIC CABLE IN CONDUIT, SIGNAL NO. 14 5C	FOOT	1364
ELECTRIC CABLE IN CONDUIT, SIGNAL NO. 14 7C	FOOT	3566
ELECTRIC CABLE IN CONDUIT, LEAD-IN, NO. 14 1 PAIR	FOOT	2368
ELECTRIC CABLE IN CONDUIT, SERVICE, NO. 6 2C	FOOT	36
ELECTRIC CABLE IN CONDUIT, EQUIPMENT, GROUNDING CONDUCTOR, NO. 6 1C	FOOT	689
ELECTRICAL CABLE IN CONDUIT NO. 20 3/C, TWISTED, SHIELDED	FOOT	445
STEEL MAST ARM ASSEMBLY AND POLE WITH DUAL MAST ARMS, 14 FT. AND 58 FT.	EACH	1
STEEL MAST ARM ASSEMBLY AND POLE WITH DUAL MAST ARMS, 28 FT. AND 58 FT.	EACH	1
STEEL MAST ARM ASSEMBLY AND POLE WITH DUAL MAST ARMS, 28 FT. AND 62 FT.	EACH	1
STEEL MAST ARM ASSEMBLY AND POLE WITH DUAL MAST ARMS, 30 FT. AND 60 FT.	EACH	1
TRAFFIC SIGNAL POST, GALVANIZED STEEL, 10 FT	EACH	1
CONCRETE FOUNDATION, TYPE A	FOOT	4
CONCRETE FOUNDATION, TYPE C	FOOT	4
CONCRETE FOUNDATION, TYPE E 42-INCH DIAMETER	FOOT	84
TRAFFIC SIGNAL BACKPLATE, LOUVERED, ALUMINUM	EACH	20
INDUCTIVE LOOP DETECTOR	EACH	8
DETECTOR LOOP, TYPE 1	FOOT	773
LIGHT DETECTOR	EACH	2
LIGHT DETECTOR AMPLIFIER	EACH	1
PEDESTRIAN PUSH-BUTTON	EACH	8
TEMPORARY TRAFFIC SIGNAL INSTALLATION	EACH	1
REMOVE EXISTING TRAFFIC SIGNAL EQUIPMENT	EACH	1
REMOVE EXISTING HANDHOLE	EACH	14
REMOVE EXISTING CONCRETE FOUNDATION	EACH	9
SIGNAL HEAD, L.E.D., 1-FACE, 3-SECTION, MAST ARM MOUNTED	EACH	6
SIGNAL HEAD, L.E.D., 1-FACE, 5-SECTION, MAST ARM MOUNTED	EACH	14
PEDESTRIAN SIGNAL HEAD, L.E.D., 1-FACE, BRACKET MOUNTED WITH COUNT DOWN TIMER	EACH	2
PEDESTRIAN SIGNAL HEAD, L.E.D., 2-FACE, BRACKET MOUNTED WITH COUNTDOWN TIMER	EACH	3
SERVICE INSTALLATION, POLE MOUNT	EACH	1
UNINTERRUPTIBLE POWER SUPPLY	EACH	1
TEMPORARY TRAFFIC SIGNAL TIMING	EACH	1

EMERGENCY VEHICLE PREEMPTION SEQUENCE

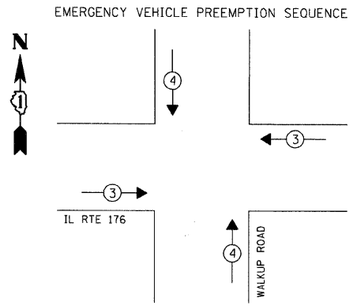

PROPOSED EMERGENCY VEHICLE PREEMPTORS		
EMERGENCY VEHICLE PREEMPTOR	3	4
MOVEMENT	← →	↓ ↑

CONTROLLER SEQUENCE

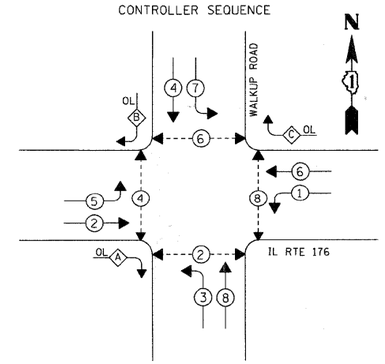

PHASE DESIGNATION DIAGRAM

LEGEND

- DUAL ENTRY PHASE
- PEDESTRIAN PHASE
- OVERLAP
- * NUMBER REFERS TO ASSOCIATED PHASE

TRAFFIC SIGNAL INSTALLATION ELECTRICAL SERVICE REQUIREMENTS					TOTAL WATTAGE
TYPE	NO. OF LAMPS	WATTAGE X INCAND.	LED X	% OPERATION	
SIGNAL (RED)	20	X	17	0.50	170.0
(YELLOW)	20	X	25	0.25	125.0
(GREEN)	20	X	15	0.25	75.0
ARROW	28	X	12	0.10	33.6
PED. SIGNAL	8	X	25	1.00	200.0
CONTROLLER	1	X	100	1.00	100.0
ILLUM. SIGN	--	X	25	0.05	
FLASHER	--	X		0.50	
ENERGY COSTS TO: CITY OF CRYSTAL LAKE				TOTAL =	703.6

MARK STONIKAS 815-356-3700, EXT. 4025
100 W. WOODSTOCK STREET
CRYSTAL LAKE, ILLINOIS 60014
ENERGY SUPPLY: CONTACT: LISA COOK
PHONE: 815-477-5204
COMPANY: COM. ED.

REVISIONS	
NAME	DATE

MCHENRY COUNTY DIVISION OF TRANSPORTATION
WALKUP ROAD F.A.U. 0085

SOQ, CABLE PLAN, PHASE DESIGNATION DIAGRAM, EMERGENCY VEHICLE SEQUENCE

IL ROUTE 176 & WALKUP ROAD

SCALE: N.T.S. DRAWN BY: SNB
DATE: 06/10/11 CHECKED BY: RRM

TENG

TENG & ASSOCIATES, INC.
ENGINEERS/ARCHITECTS/PLANNERS
300 N. MICHIGAN AVE. CHICAGO, IL 60601
TELEPHONE: 312/616-0500

..\AL02A002.DGN, ..\RW02A002.DGN, ..\AL02A002.DGN, ..\AL02A002.DGN, ..\RW02A003.SHT, ..\RW02A002.DGN, ..\AL02A002.DGN, ..\RW02A003.DGN, ..\PL02A002.DGN, ..\PW02A002.DGN, ..\PL02A002.DGN, ..\RW02A002.DGN, ..\RW02A002.DGN, ..\PL02A002.DGN, ..\PL02A002.DGN, ..\RW02A006.DGN, ..\RW02A006.DGN, ..\RW02A006.DGN, ..\TP02A003.SHT, ..\RW02A002.DGN, ..\AL02A002.DGN, ..\B998A006.DGN, ..\AL02A002.DGN, ..\AL02A002.DGN, ..\RW02A002.DGN, ..\RW02A003.DGN, ..\PW02A002.DGN, ..\PW02A002.DGN,
6-24-2011 9:39:45 \\FS-1044\MAN\VAULT\D-TRANS_OT\2202\300-03\CIVIL\CAD\02 CONTRACT\IA TENG\SHEET\TD02A003.SHT STANKIRU
1 2 3 4 5 6 7 8 9 10 11 12 13 14 15 16 17 18 19 20 21 22 23 24 25 26 27 28 29 30 31 32 33 34 35 36 37 38 39 40 41 42 43 44 45 46 47 48 49 50 51 52 53 54 55 56 57 58 59 60 61 62 63