93552

COUNTY	ROUTE	SECTION	TOTAL SHEETS	SHEET NO.
ADAMS	FAS 432	11-00206-01-RS	11	10
STATION 262+00 TO STATION 280+28				

PROJECT NO. RS-0432(125)

50 0 50 100
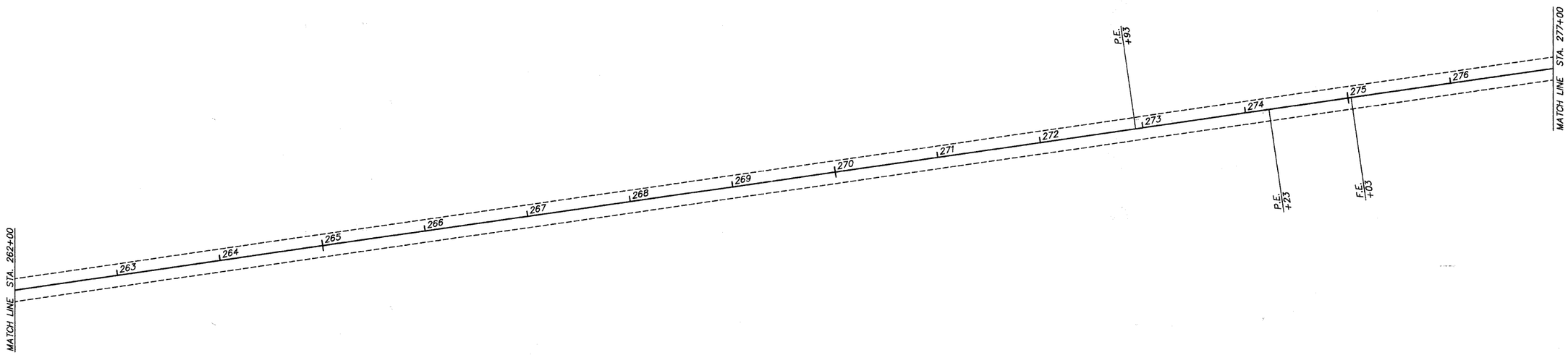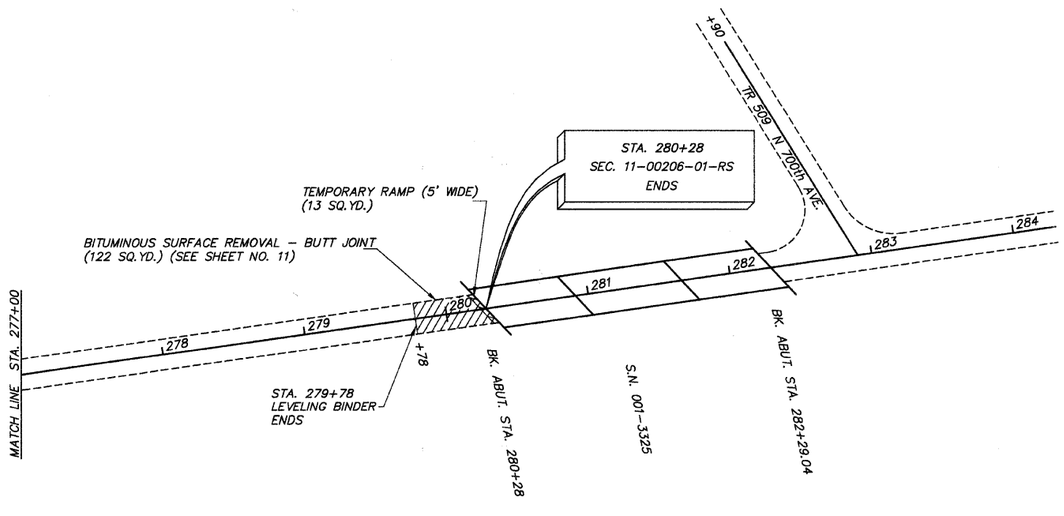
GRAPHIC SCALE IN FEET