STATE OF ILLINOIS
DEPARTMENT OF TRANSPORTATION

ROUTE NO.	SECTION	COUNTY	TOTAL SHEETS	SHEET NO.
FAI 74	(57-22) BR-2	McLEAN	42	19
FED. ROAD DIST. NO. 7		ILLINOIS	FED. AID PROJECT-	

SHEET NO. 8
23 SHEETS

Contract No. 70671

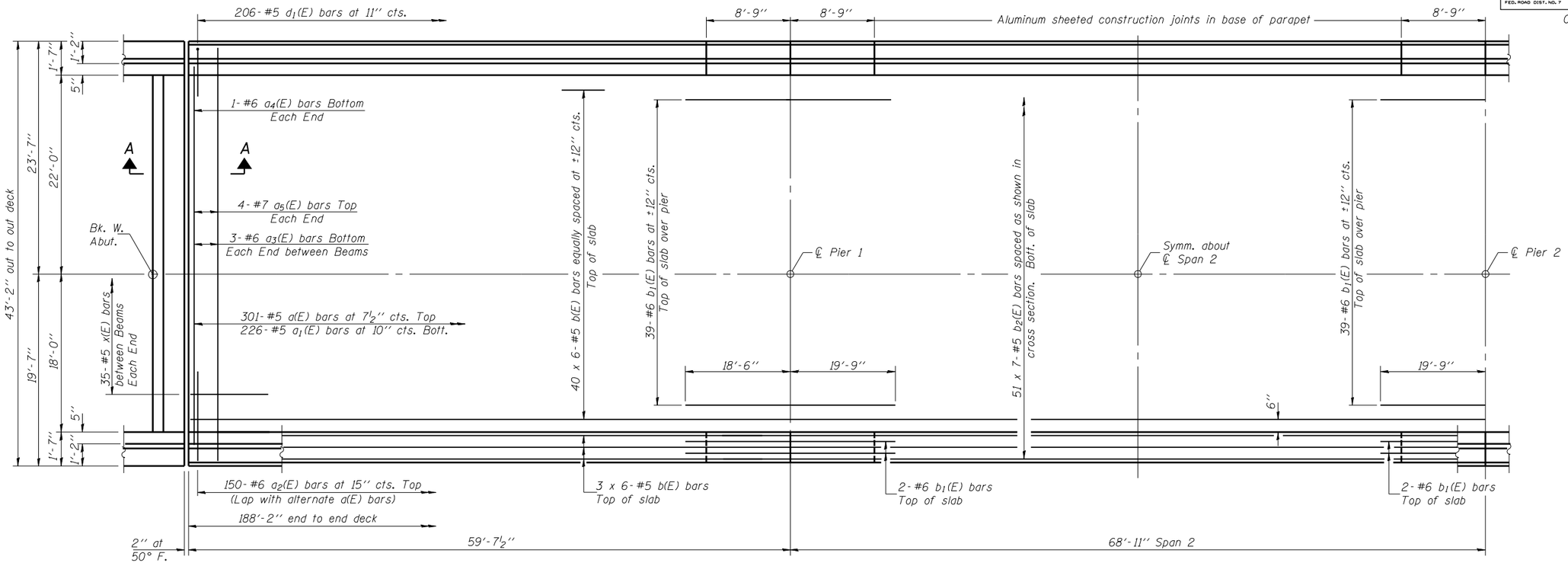

PARTIAL PLAN

MIN. BAR LAP

#5 bar = 1'-8''

Notes:
- See sheet 9 of 23 for superstructure details and Bill of Material.
- Bars indicated thus 40 x 6- #5 etc. indicates 40 lines of bars with 6 lengths per line.
- See sheet 9 of 23 for parapet reinforcement.

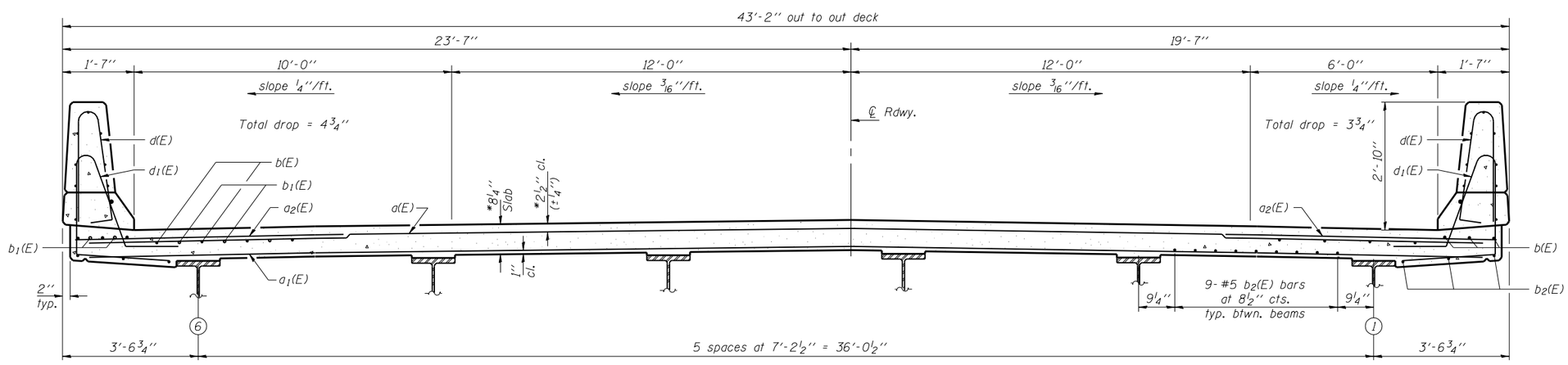

NEAR MIDSPAN

NEAR PIER

CROSS SECTION

(Looking East)

*Prior to Grinding

DESIGNED	Dewey H. Coultas
CHECKED	Chi-Cheung Chau
DRAWN	h.t. duong
CHECKED	DHC/CCC

AUGUST 2, 2007

EXAMINED Thomas J. Domagalski
ENGINEER OF BRIDGE DESIGN

PASSED Ralph E. Anderson
ENGINEER OF BRIDGES AND STRUCTURES

SUPERSTRUCTURE
F.A.I. RT. 74 - SEC. (57-22)BR-2
McLEAN COUNTY
STATION 1039+00
STRUCTURE NO. 057-0126 (W.B.)