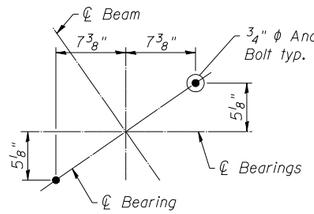

ANCHOR BOLT LAYOUT

(Typical both abutments)

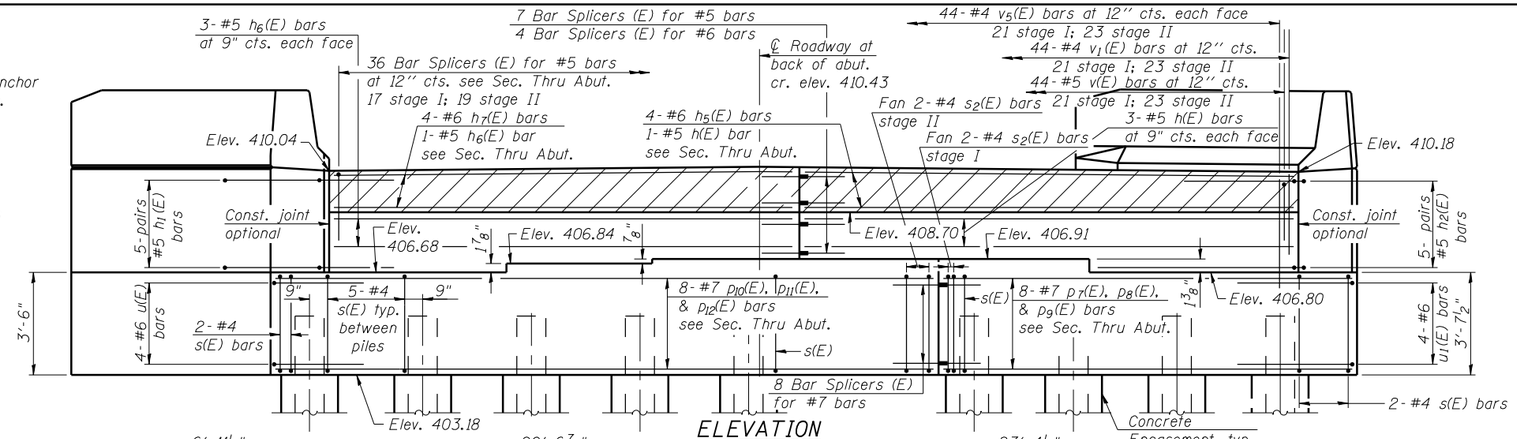

ELEVATION

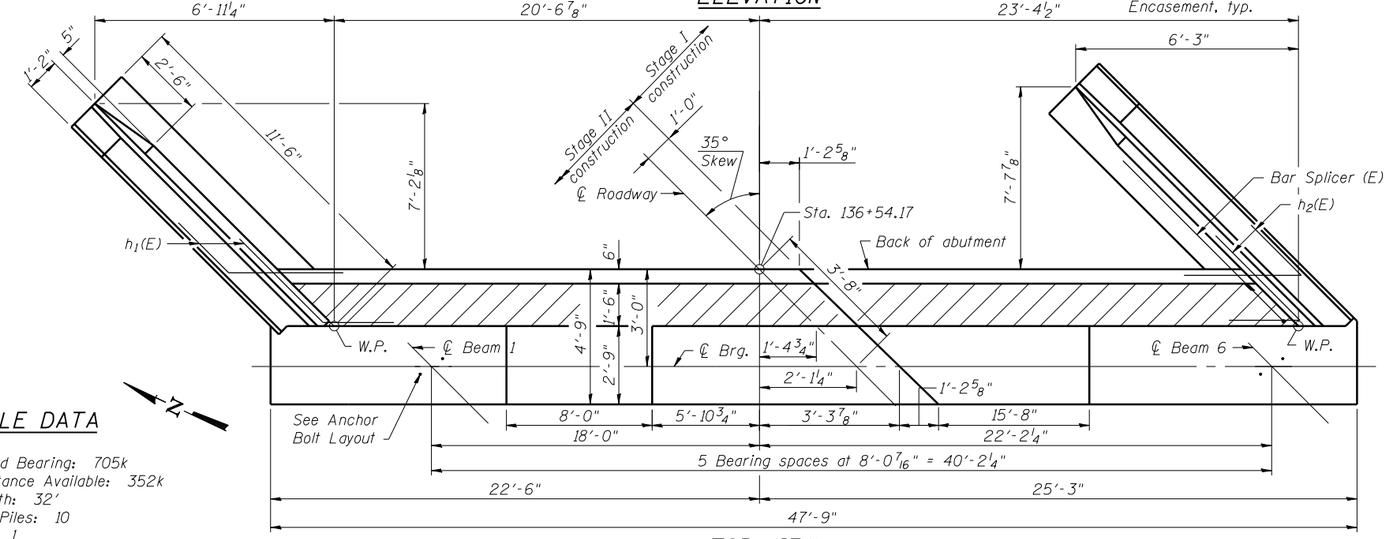

TOP VIEW

PILE DATA

Type: HP14x89
Nominal Required Bearing: 705k
Factored Resistance Available: 352k
Estimated Length: 32'
No. Production Piles: 10
No. Test Piles: 1

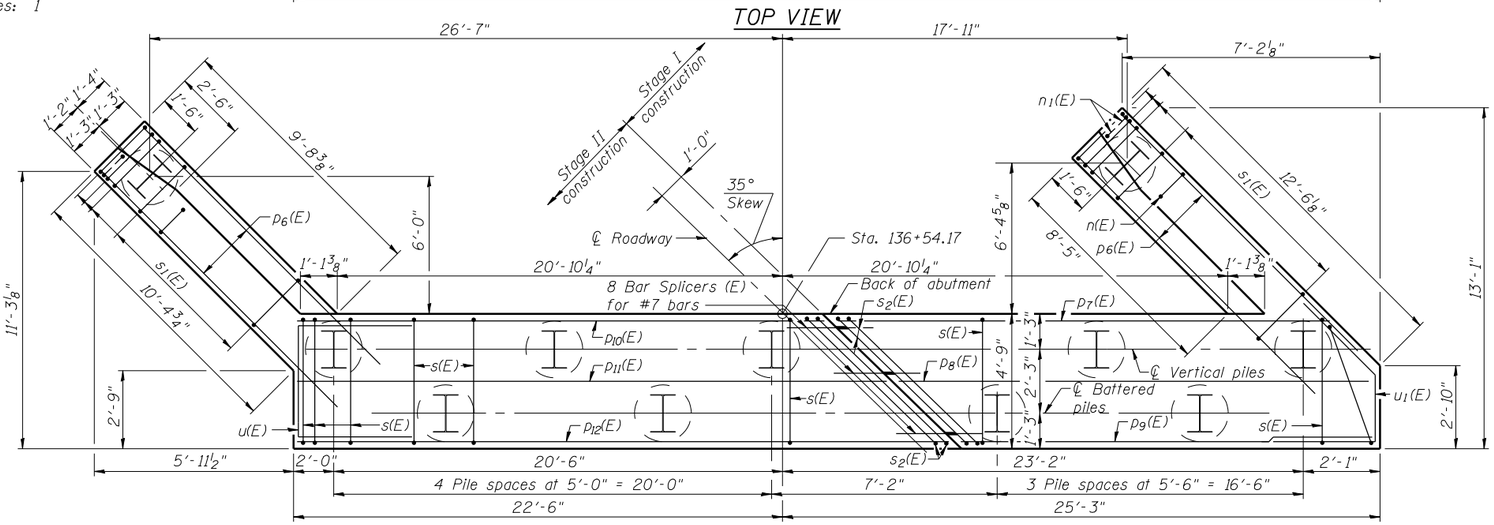

PLAN-PILE CAP

NORTH ABUTMENT BILL OF MATERIAL

Bar	No.	Size	Length	Shape
h(E)	7	#5	20'-4"	
h1(E)	10	#5	5'-0'	
h2(E)	10	#5	5'-0"	
h3(E)	11	#4	11'-11"	
h4(E)	12	#4	11'-2"	
h5(E)	4	#6	20'-4"	
h6(E)	7	#5	22'-9"	
h7(E)	4	#6	22'-9"	
h8(E)	9	#4	10'-4"	
n(E)	18	#6	11'-2"	
n1(E)	12	#6	5'-7"	
p6(E)	12	#7	12'-2"	
p7(E)	3	#7	22'-2"	
p8(E)	2	#7	22'-0"	
p9(E)	3	#7	20'-6"	
p10(E)	3	#7	23'-6"	
p11(E)	2	#7	25'-0"	
p12(E)	3	#7	26'-6"	
s(E)	41	#4	15'-11"	
s1(E)	24	#4	9'-5"	
s2(E)	4	#4	17'-9"	
u(E)	4	#6	9'-6"	
u1(E)	4	#6	7'-8"	
v(E)	44	#5	3'-9"	
v1(E)	44	#4	3'-3"	
v2(E)	24	#6	5'-11"	
v3(E)	6	#6	5'-9"	
v4(E)	18	#6	6'-0"	
v5(E)	88	#4	4'-6"	
Structure Excavation			Cu. Yd.	170
Concrete Structures			Cu. Yd.	46.6
Reinforcement Bars, Epoxy Coated			Pound	4080
Furnishing Steel Piles, HP14x89			Foot	320
Driving Piles			Foot	320
Test Pile, HP14x89			Each	1
Concrete Encasement			Cu. Yd.	6.0
Concrete Sealer			Sq. Ft.	497
Granular Backfill for Structures			Cu. Yd.	49
Geocomposite Wall Drain			Sq. Yd.	27
Pipe Underdrains for Structures 4"			Foot	90

For details of Bar Splicers, see sheet 25 of 31.
For details of piles and Concrete Encasement, see sheet 24 of 31.
For Sec. Thru Abut. and wing wall details, see sheet 21 of 31.
Concrete Sealer shall be applied to all exposed surfaces of the backwall, bearing seats, and pile cap.
For bar bending details, see sheet 19 of 31.

PRINT DRIVER = LPD.E.B.dpl1
PIN TABLE = DOT-16B0ZTBL
PLOT STYLE = ESCA.stb
FILE NAME = R933025-74219-28-NAbu.dgn

ESCA CONSULTANTS, INC. CIVIL & STRUCTURAL ENGINEERS

USER NAME = has	DESIGNED - ELH	03/13	REVISED -	STATE OF ILLINOIS DEPARTMENT OF TRANSPORTATION	NORTH ABUTMENT STRUCTURE NO. 093-0025
ESCA PROJECT NO. 933.14	CHECKED - RDP	04/13	REVISED -		
PLOT SCALE = 0:2 ':' / IN.	DRAWN - HAS	03/13	REVISED -		
PLOT DATE = 6/10/2014 8:52:52 AM	CHECKED - ELH	01/14	REVISED -		SHEET NO. 20 OF 31 SHEETS

F.A.P. RTE.	SECTION	COUNTY	TOTAL SHEETS	SHEET NO.
332	(12,B2)B-1	WABASH	68	40
		CONTRACT NO. 74219		
		ILLINOIS FED. AID PROJECT		