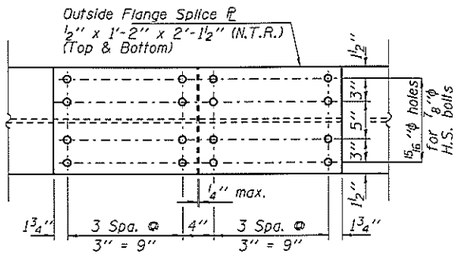

PLAN
(Top & Bottom Outside Plate)

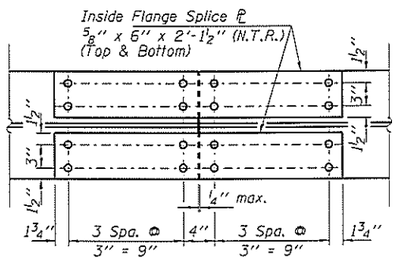

PLAN
(Top & Bottom Inside Plates)

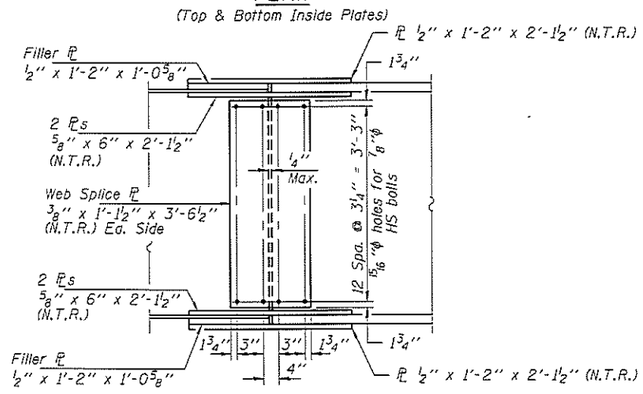

ELEVATION

SPLICE #1 & #4 DETAIL
(12 required)

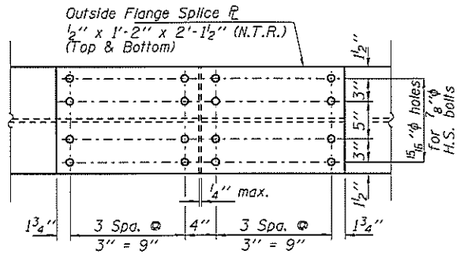

PLAN
(Top & Bottom Outside Plate)

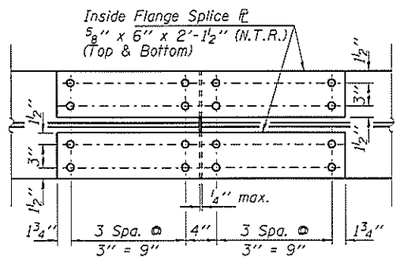

PLAN
(Top & Bottom Inside Plates)

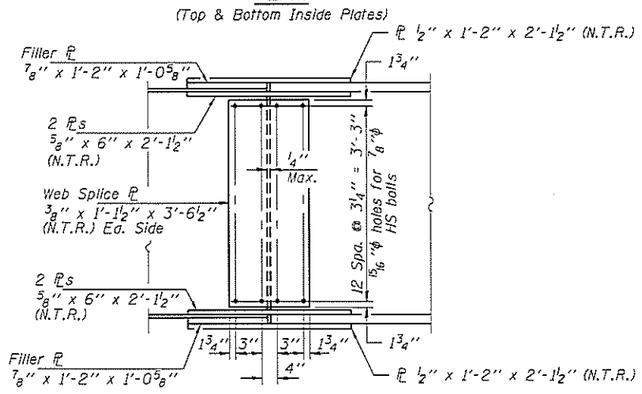

ELEVATION

SPLICE #2 & #3 DETAIL
(12 required)

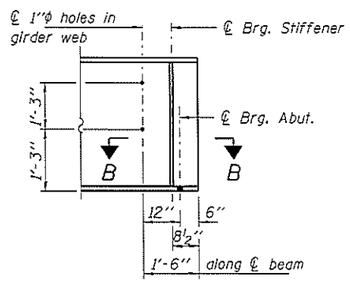

TYP. END OF
GIRDER ELEVATION

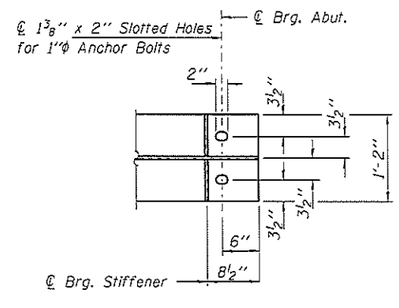

SECTION B-B

Notes:
For additional structural steel details see sheets 16, 18 and 19 of 32.
All cross frames or diaphragms shall be installed as steel is erected and secured with erection pins and bolts except as otherwise noted. Individual cross frames or diaphragms at supports may be temporarily disconnected to install bearing anchor rods.
Load carrying components designated "NTR" shall conform to the Impact Testing Requirement, Zone 2.
All splices and diaphragms, including stiffeners, shall be AASHTO M270, Grade 50W.

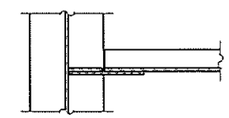

SECTION A-A

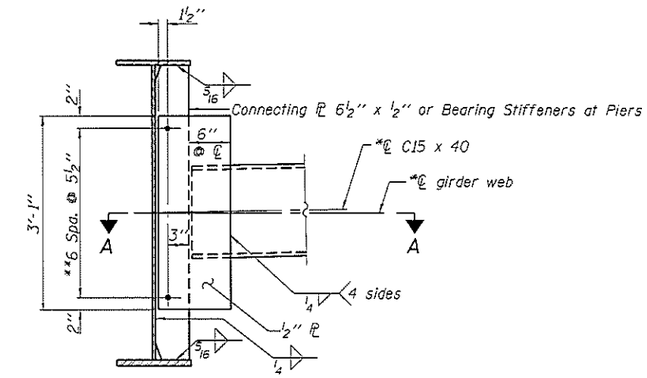

INTERIOR DIAPHRAGM D
(95 required)

Note:
Two hardened washers required for each set of oversized holes.
*Alternate channels C15X50 are permitted to facilitate material acquisition. Calculated weight of structural steel is based on C15x40 section. The alternate, if utilized, shall be provided at no additional cost to the Department.
**3/4" φ HS bolts, 15/16" φ holes

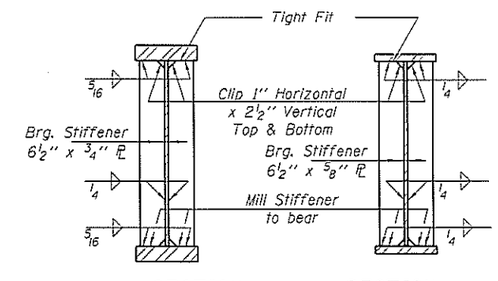

SECTION AT PIERS

SECTION AT ABUTMENT

BEARING STIFFNER PL'S

FILE NAME = $FILE$	USER NAME =	DESIGNED - S.M.S. -	REVISED -	STATE OF ILLINOIS DEPARTMENT OF TRANSPORTATION	STRUCTURAL STEEL DETAILS STRUCTURE NO. 039-0077	FAP	SECTION	COUNTY	TOTAL SHEETS / SHEET NO.
3085 STEVENSON DRIVE, SUITE 201 SPRINGFIELD, ILLINOIS 62703 217.546.3400 www.hlrengineering.com		CHECKED - C.C.S.	REVISED -			42	13B-1	JACKSON	112 / 51
H&L 184.001.010 ILLINOIS PROFESSIONAL DESIGN FIRM 131/PE-SE CORPORATION	PLOT SCALE =	DRAWN - D.A.B.	REVISED -		SHEET NO. 17 OF 32 SHEETS	IL 13/127 OVER BEAUCOUP CR.		CONTRACT NO. 78215	
	PLOT DATE = 7/17/2014	CHECKED - M.D.C.	REVISED -			ILLINOIS FED. AID PROJECT			