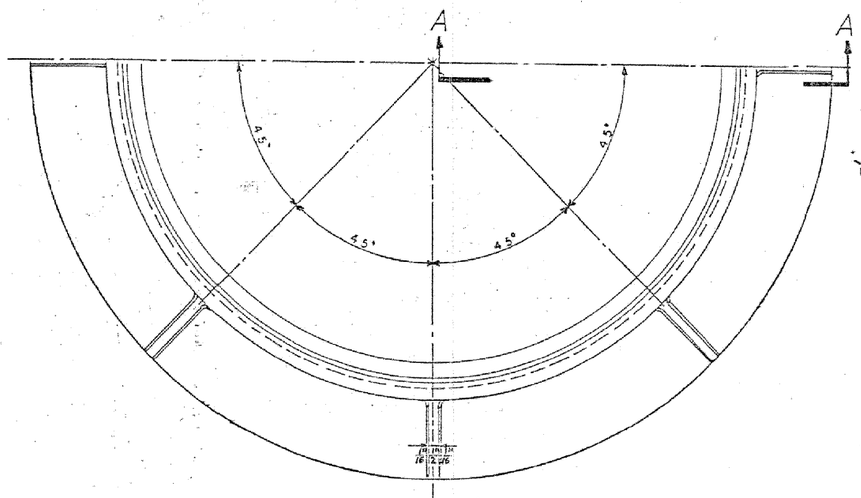

HALF PLAN

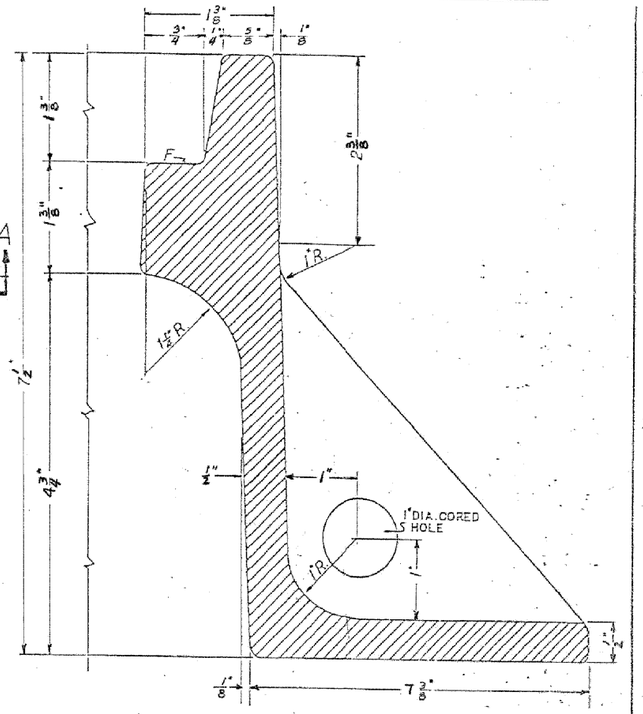

MATERIAL - CAST IRON
ESTIMATED WEIGHT APP. 250 LB.

F - DENOTES BEARING SURFACE SHALL BE MACHINED SMOOTH.

TYPICAL SECTION THRU FRAME

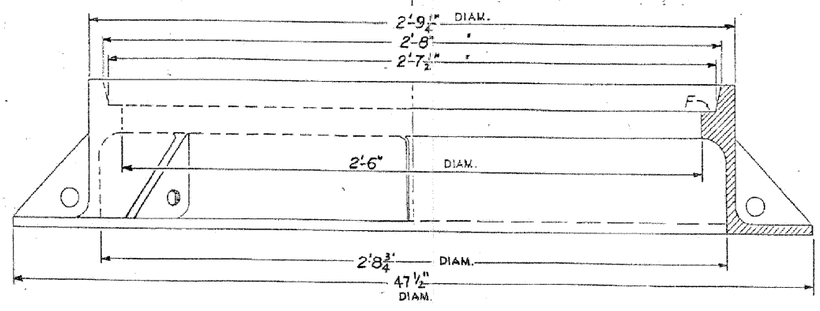

HALF ELEVATION

HALF SECTION A-A

COMMODITY CODE NO.

SUPERSEDES DRG. # 10926 DATED 4-6-35

30" CIRCULAR STREET MANHOLE FRAME

	REVISED	
REDRAWN	A	
WEIGHT REVISED	B	
O.D. OF FRAME INCREASED TO 47 1/2"	C	5-5-'92
	D	
	E	
	F	
	G	

CITY OF CHICAGO
DEPT. OF STREETS AND SANITATION
BUREAU OF ELECTRICITY
DIVISION OF ELECTRICAL ENGINEERING

DRAWN: [signature] CHECKED: R. SYCKOWSKI ENGINEER: M. SHINE

[signature] ENGINEER OF ELECTRICITY

[signature] DEPUTY DIRECTOR

DRG. NO. 874

SIZE: 15 x 21" SCALE: 3" = 1'-0" DATE: 5-5-'92

FILE NAME = $FILEL$	USER NAME = $USER$	DESIGNED -	REVISED -	STATE OF ILLINOIS DEPARTMENT OF TRANSPORTATION	LIGHTING DETAILS	F.A.I. RTE. 94	SECTION 0101.8B	COUNTY COOK	TOTAL SHEETS 139	SHEET NO. 70
		DRAWN -	REVISED -					CONTRACT NO. 60C18		
	PLOT SCALE = $SCALE$	CHECKED -	REVISED -							
	PLOT DATE = $DATE$	DATE -	REVISED -		SCALE: 1:20 SHEET NO. OF SHEETS STA. TO STA.		ILLINOIS FED. AID PROJECT			