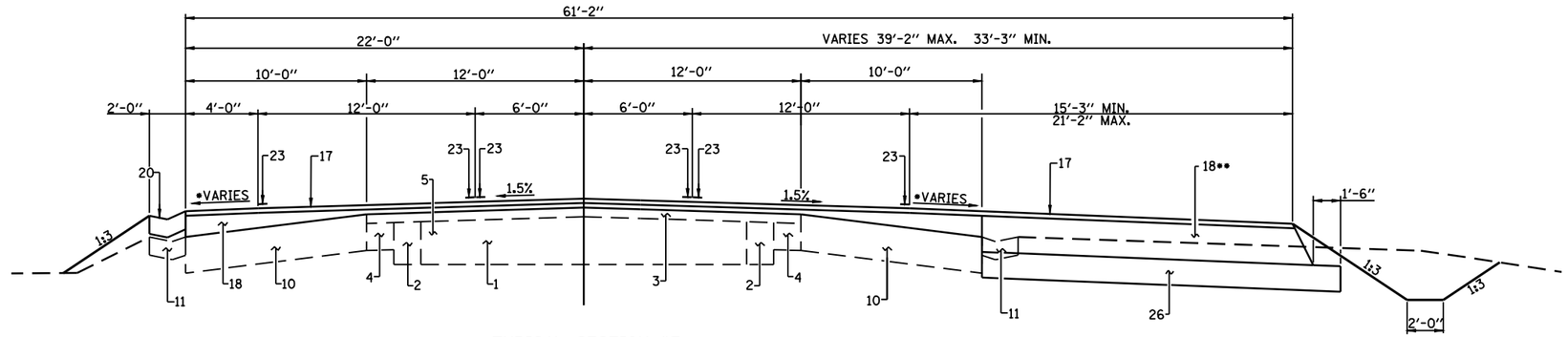

TYPICAL SECTION #7

STA. 71+02.00 TO STA. 72+00.00

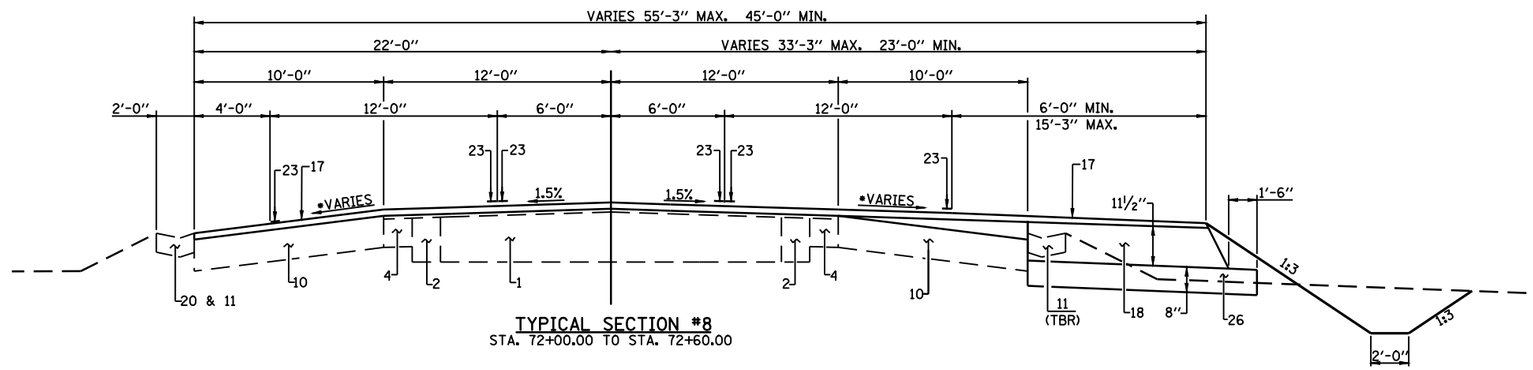

TYPICAL SECTION #8

STA. 72+00.00 TO STA. 72+60.00

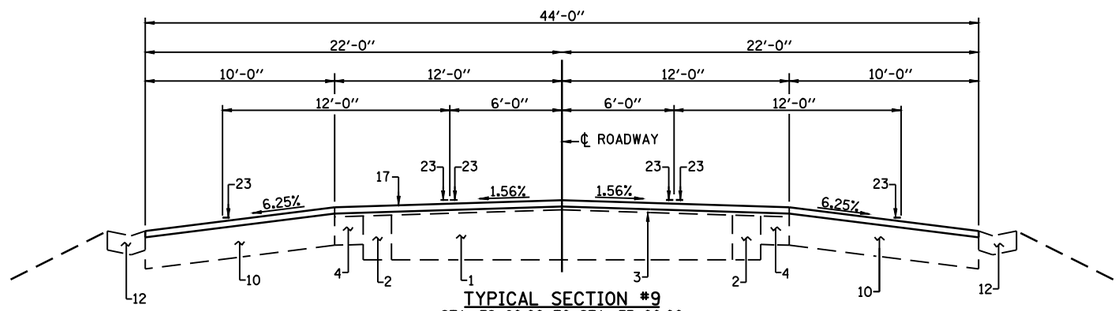

TYPICAL SECTION #9

STA. 72+60.00 TO STA. 73+00.00

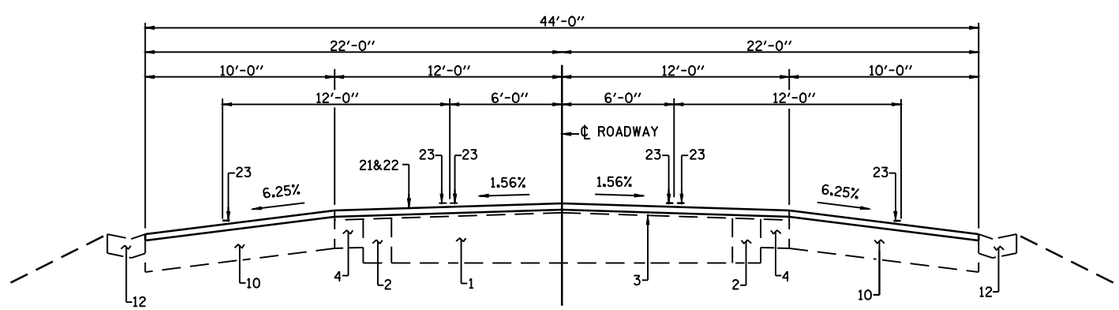

TYPICAL SECTION #10

STA. 73+00.00 TO STA. 75+63.00

STA. 87+90.99 TO STA. 89+50.00

* VARY CROSS SLOPE FROM 2% AT 18' LT. & RT. - STA. 71+50 TO 6.25% AT 12' LT. & RT. - STA. 72+50

** STA. 69+66.65 TO STA. 72+60 RT. 18 - 11½" MIN. THICKNESS

PAVEMENT LEGEND

1. EXISTING CONCRETE PAVEMENT
2. EXISTING CONCRETE WIDENING
3. EXISTING HOT-MIX ASPHALT OVERLAY 5½" & VARIABLE
4. EXISTING HOT-MIX ASPHALT WIDENING 9"
5. EXISTING CONCRETE SURFACE 3"
6. EXISTING HOT-MIX ASPHALT SHOULDER 13½"
7. EXISTING HOT-MIX ASPHALT SHOULDER 8"
8. EXISTING AGGREGATE SHOULDER, TYPE A 6"
9. EXISTING AGGREGATE SUB BASE 6"
10. EXISTING HOT-MIX BASE COURSE 11¾"
11. EXISTING CONCRETE GUTTER, TYPE B (SPECIAL) T.B.R.
12. EXISTING CONCRETE GUTTER, TYPE B (SPECIAL)
13. EXISTING HOT-MIX ASPHALT PAVEMENT 12"
14. EXISTING PAINT PAVEMENT MARKING LINE 5"
15. EXISTING AGGREGATE SHOULDER 8"
16. EXISTING AGGREGATE SHOULDER WEDGE, TYPE A
17. PROPOSED HOT-MIX ASPHALT SURFACE COURSE (1½" MIN.)
18. PROPOSED HOT-MIX ASPHALT BINDER COURSE (2¼" MIN.)
19. PROPOSED BRIDGE APPROACH SLAB 15"
20. PROPOSED CONCRETE GUTTER TYPE B (SPECIAL)
21. PROPOSED HOT-MIX ASPHALT SURFACE COURSE (2")
22. PROPOSED HOT-MIX ASPHALT SURFACE REMOVAL 2"
23. PROPOSED THERMOPLASTIC PAVEMENT MARKING LINE 5"
24. PROPOSED TEMPORARY PAVEMENT MARKING LINE 5"
25. PROPOSED CONCRETE CURB AND GUTTER, B6-18
26. PROPOSED SUB-BASE GRANULAR, TYPE A (8" MIN.)

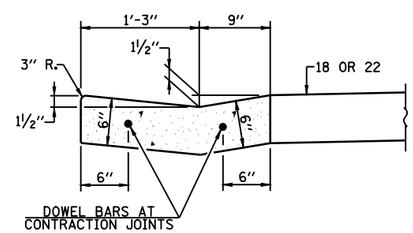

NOTE: SEE STANDARD 606201 FOR DETAILS AND NOTES NOT SHOWN EXCEPT ½"Ø STEEL TIE BARS SHOWN IN STANDARD WILL NOT BE REQUIRED

DETAIL OF CONCRETE GUTTER TYPE B SPECIAL

FILE NAME = c:\pw_work\PWIDOT\LAUGHLINRL\d0213035\D672A73-sht-typicals.dgn	USER NAME = laughlnrl	DESIGNED -	REVISED -	Allen Henderson & Associates, Inc. Civil and Structural Engineers Springfield, IL. 62703 Phone: (217)544-8033 IL. Design Firm No. 184-001907	DETAILS & TYPICAL SECTIONS	F.A.P. RTE. 662	SECTION H(RS-10,B-2)	COUNTY SANGAMON	TOTAL SHEETS 84 / SHEET NO. 10
		DRAWN -	REVISED -					CONTRACT NO. 72A73	
	PLOT SCALE = 8.0000 ' / IN.	CHECKED -	REVISED -						
	PLOT DATE = Jun-28-2010 10:57:29AM	DATE -	REVISED -		SCALE: / SHEET NO. 3 OF 4 SHEETS / STA. / TO STA.	FED. ROAD DIST. NO.	ILLINOIS	FED. AID PROJECT	