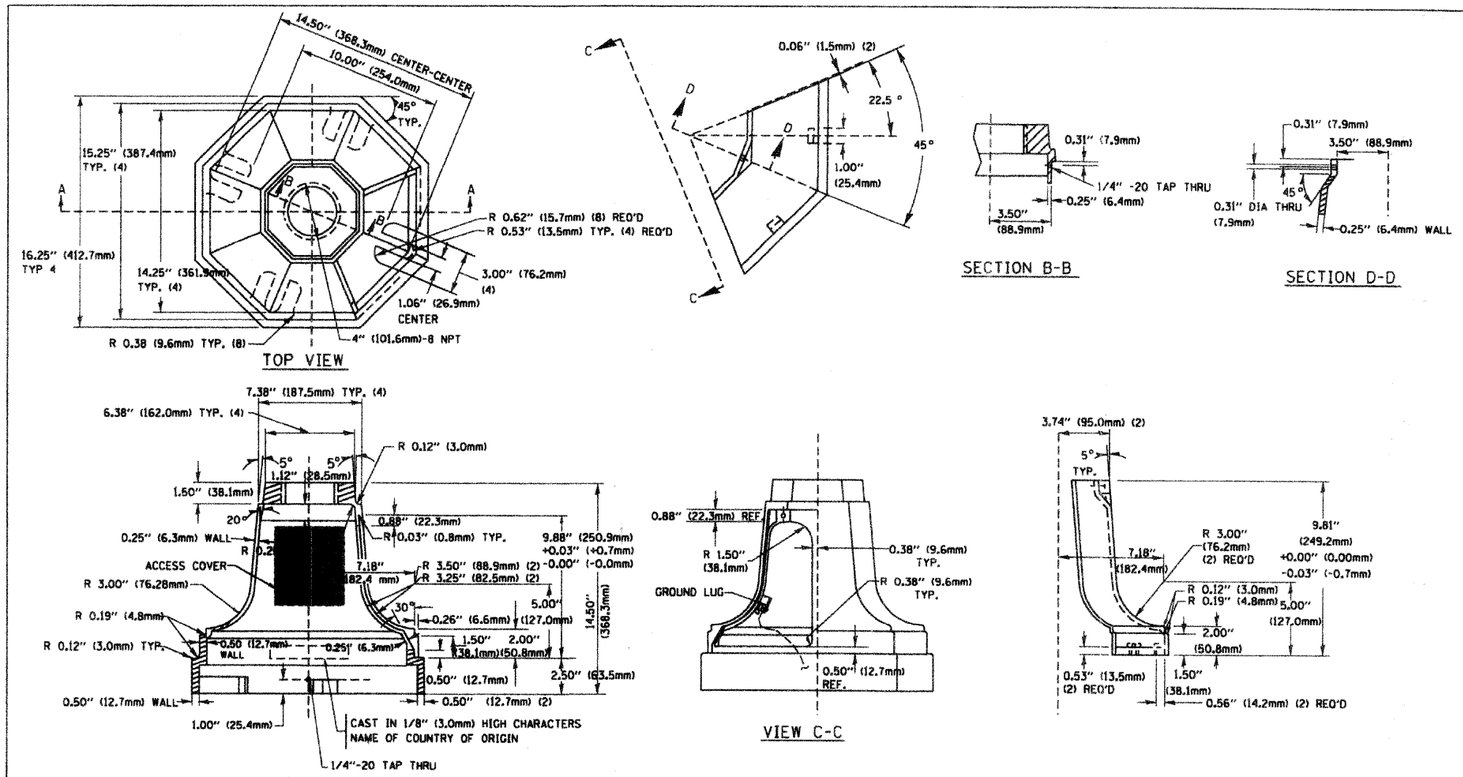

TRAFFIC SIGNAL POST - MOUNTING BASE - TYPE A

MATERIAL:

- ASTM A48 CLASS 30 GREY IRON
- ASTM A123 HOT DIPPED GALVANIZED

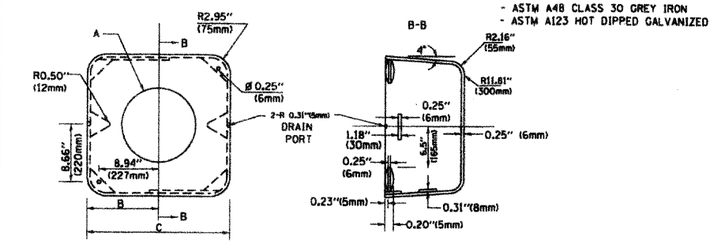

TYPE	A	B	C	HEIGHT	WEIGHT
I	ø 10.125"(257mm)	9.5"(241mm)	19"(483mm)	12" (300mm)	24kg
II	ø 11.125"(283mm)	10.75"(273mm)	21.5"(546mm)	12" (300mm)	26Kg

SHROUD DETAIL

NOTE:
SUPPORT EXISTING CABINET AND CONTROL EQUIPMENT ABOVE FOUNDATION TO KEEP TRAFFFIC SIGNAL FUNCTIONING WHILE FOUNDATION MODIFICATION WORK IS PROCEEDING.

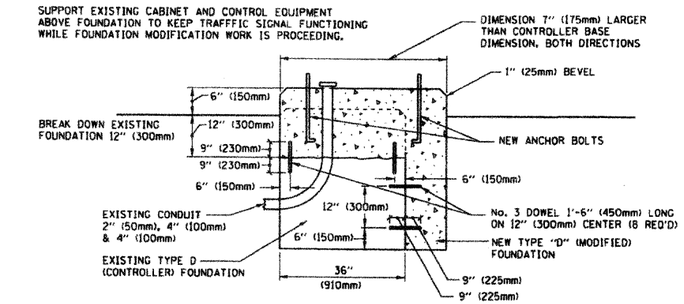

MODIFY EXISTING TYPE "D" FOUNDATION

(NOT TO SCALE)

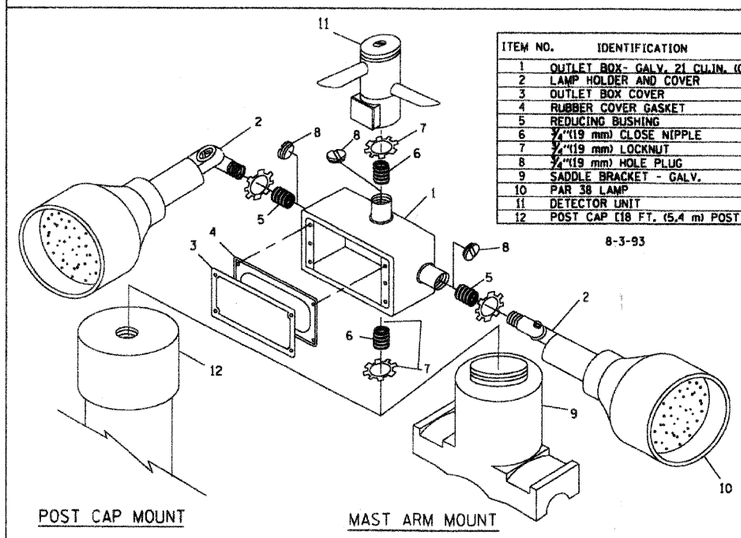

ITEM NO.	IDENTIFICATION
1	OUTLET BOX- GALV. 21 CU.IN. (0.000344 CU-M)
2	LAMP HOLDER AND COVER
3	OUTLET BOX COVER
4	RUBBER COVER GASKET
5	REDUCING BUSHING
6	¾"(19 mm) CLOSE NIPPLE
7	¾"(19 mm) LOCKNUT
8	¾"(19 mm) HOLE PLUG
9	SADDLE BRACKET - GALV.
10	PAR 38 LAMP
11	DETECTOR UNIT
12	POST CAP [18 FT. (5.4 m) POST MIN.]

8-3-93

POST CAP MOUNT

MAST ARM MOUNT

EMERGENCY VEHICLE DETECTOR WITH CONFIRMATION BEACON MOUNTING DETAIL

NOTES:

1. ALL ELECTRICAL ITEMS, EXCEPT ITEMS #2 AND #11 SHALL BE ALUMINUM OR GALVANIZED
2. ITEM #1- OZ/GEDNEY FSX-1-50 OR EQUIVALENT
   ITEM #2- MULBERRY CON-O-SHADE LAMP SHIELD OR EQUIVALENT
   ITEM #9- "BAND-IT" SADDLE BRACKET OR EQUIVALENT
3. WHEN POST MOUNTING IS SPECIFIED, ITEM #9 SHALL NOT BE REQUIRED. THE DETECTION UNIT SHALL BE MOUNTED DIRECTLY ON TOP OF THE CAP BY DRILLING AND TAPPING A ¾"(19 mm) HOLE WITH PIPE THREADS. THE POST CAP SHALL EITHER BE SCREWED TO THE TOP OF THE POST OR A MINIMUM OF 3 TIGHTENING SCREWS SHALL BE REQUIRED ON EACH CAP.

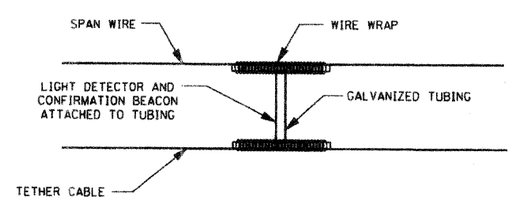

LIGHT DETECTOR AND CONFIRMATION BEACON MOUNTING FOR TEMPORARY TRAFFIC SIGNALS

(NOT TO SCALE)

NOTES:

1. REMOVAL OF EXISTING CONDUIT FROM THE HANDHOLE AND THE INSTALLATION OF THE CONDUIT BUSHING SHALL BE INCIDENTAL TO THE HANDHOLE.

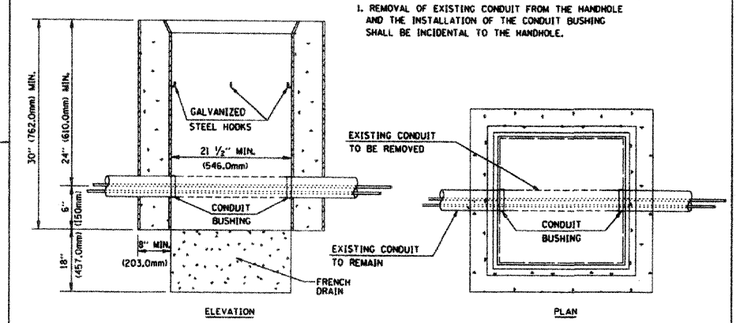

DETAIL
HANDHOLE TO INTERCEPT EXISTING CONDUIT

N.T.S.

FILE NAME = W:\diastd\22x34\ts05.dgn	USER NAME = gaglionobt	DESIGNED - D.A.D.	REVISED - BUR.TRAFFIC 03-15-01
		DRAWN - R.W.P.	REVISED - BUR.TRAFFIC 11-12-01
	PLOT SCALE = 50.0000 ' / IN.	CHECKED - D.A.Z.	REVISED - BUR.TRAFFIC 01-01-02
	PLOT DATE = 1/4/2000	DATE - 05-30-00	REVISED -

STATE OF ILLINOIS
DEPARTMENT OF TRANSPORTATION

DISTRICT ONE
STANDARD TRAFFIC SIGNAL DESIGN DETAILS

SCALE: NONE | SHEET NO. 4 OF 4 SHEETS | STA. | TO STA.

F.A. RTE.	SECTION	COUNTY	TOTAL SHEETS	SHEET NO.
379	08-00187-00-BT	COOK	10	8
	TS-05	CONTRACT NO. 63229		
FED. ROAD DIST. NO. 1	ILLINOIS	FED. AID PROJECT		