NEW CONSTRUCTION

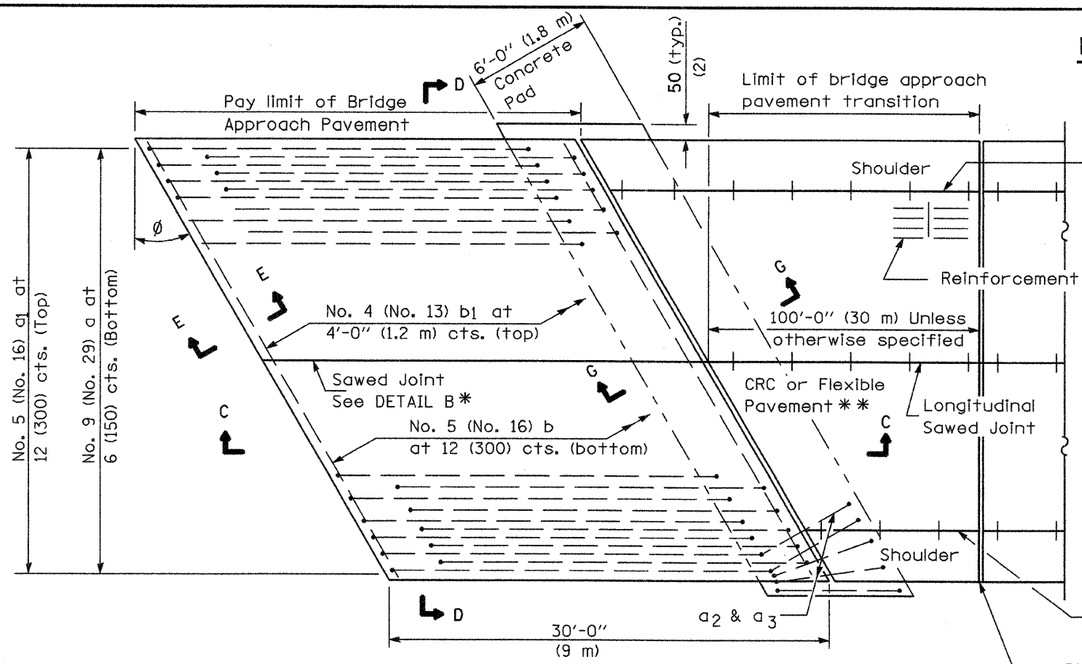

PLAN - WITH SKEW

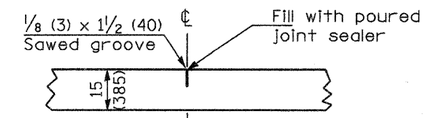

DETAIL B*

(Reinforcement Not Shown)

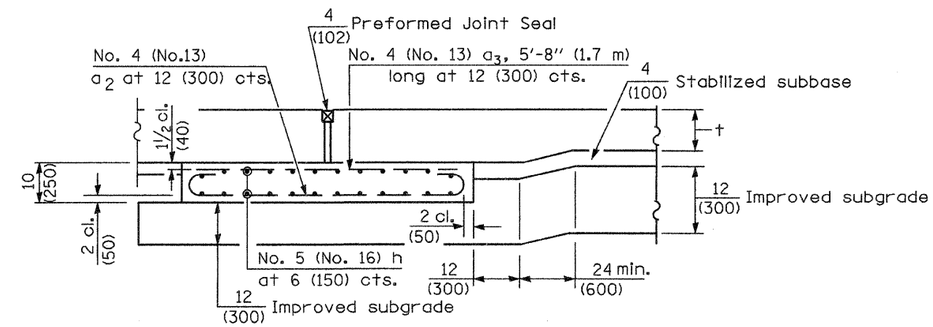

SECTION G-G - RIGID PAVEMENT

(Showing reinforcement)

Rigid Pavement only:

Wide Flange Beam Terminal Joint (See DETAIL AT BEAM - Standard 421101 or 421106) or 2 (50) Trans. Exp. Joint as detailed on Standard 420001.

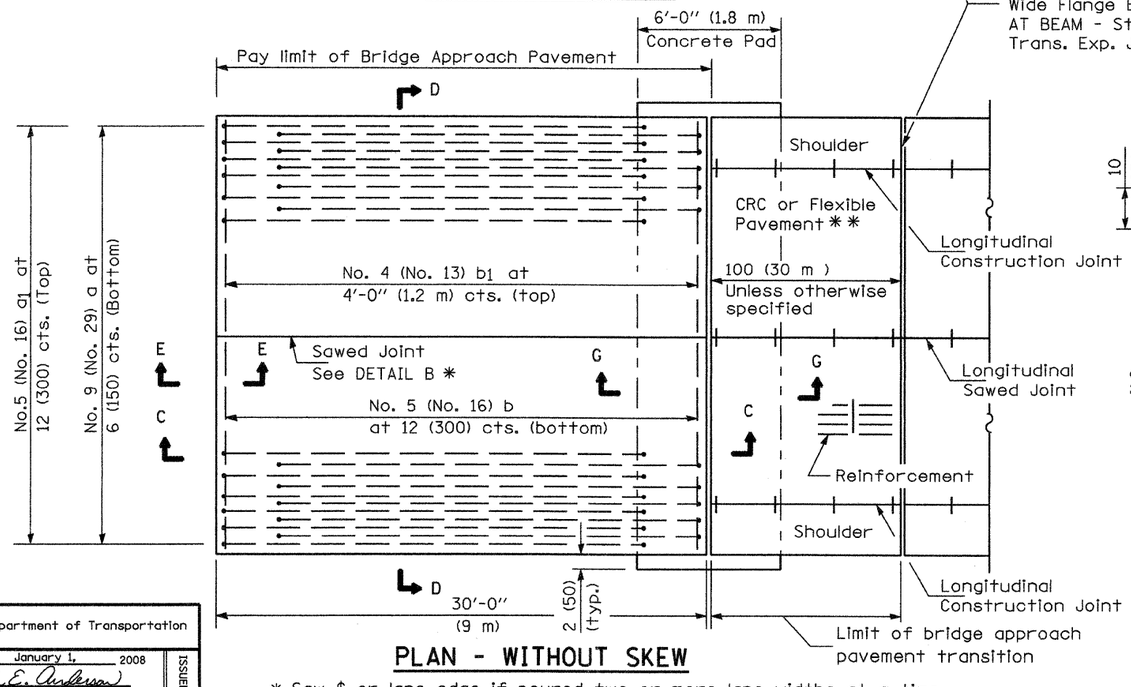

PLAN - WITHOUT SKEW

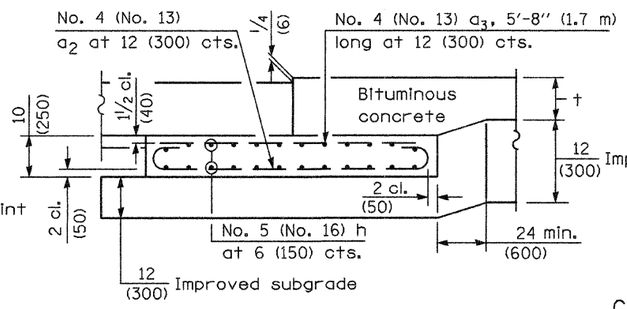

SECTION G-G - FLEXIBLE PAVEMENT

(Showing reinforcement)

* Saw ℄ or lane edge if poured two or more lane widths at a time.

** Omit Reinforcement, tie bars and Long. sawed Jt. for Flexible Pavement.

GENERAL NOTES

THICKNESS-"t"=Thickness of Pavement.

See Standard 421001 for reinforcement details not shown.

See Standard 420001 for joint details not shown.

All dimensions are in inches (millimeters) unless otherwise shown.

Illinois Department of Transportation

APPROVED January 1, 2008
Ralph E. Anderson
ENGINEER OF BRIDGES AND STRUCTURES

APPROVED January 1, 2008
ENGINEER OF DESIGN AND ENVIRONMENT

ISSUED 1-1-97

DATE	REVISIONS
1-1-08	Switched units to English
	(metric). Moved rebar epoxy
	coat note to Standard Spec.
1-1-04	Rev. size of Trans. Exp.
	Jt. and soft converted
	metric reinf.

BRIDGE APPROACH PAVEMENT

(Sheet 1 of 4)

Contract 74238

80A.