ROUTE NO.	SECTION	COUNTY	TOTAL SHEETS	SHEET NO.
	*	DUPAGE	106	39
FED. ROAD DIST. NO. 7		ILLINOIS	FED. AID PROJECT-	

* 00-00116-00-BR

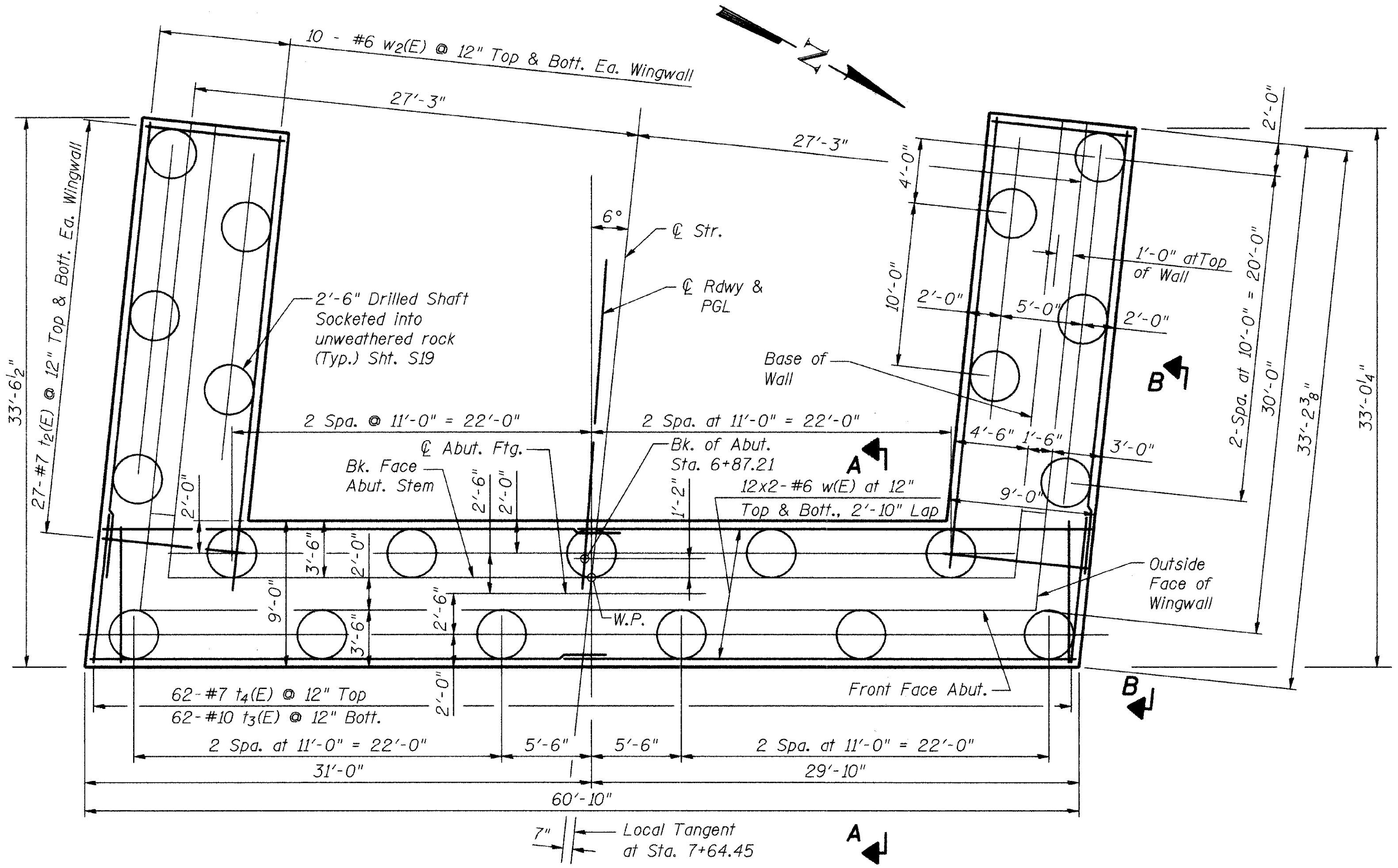

FOOTING PLAN

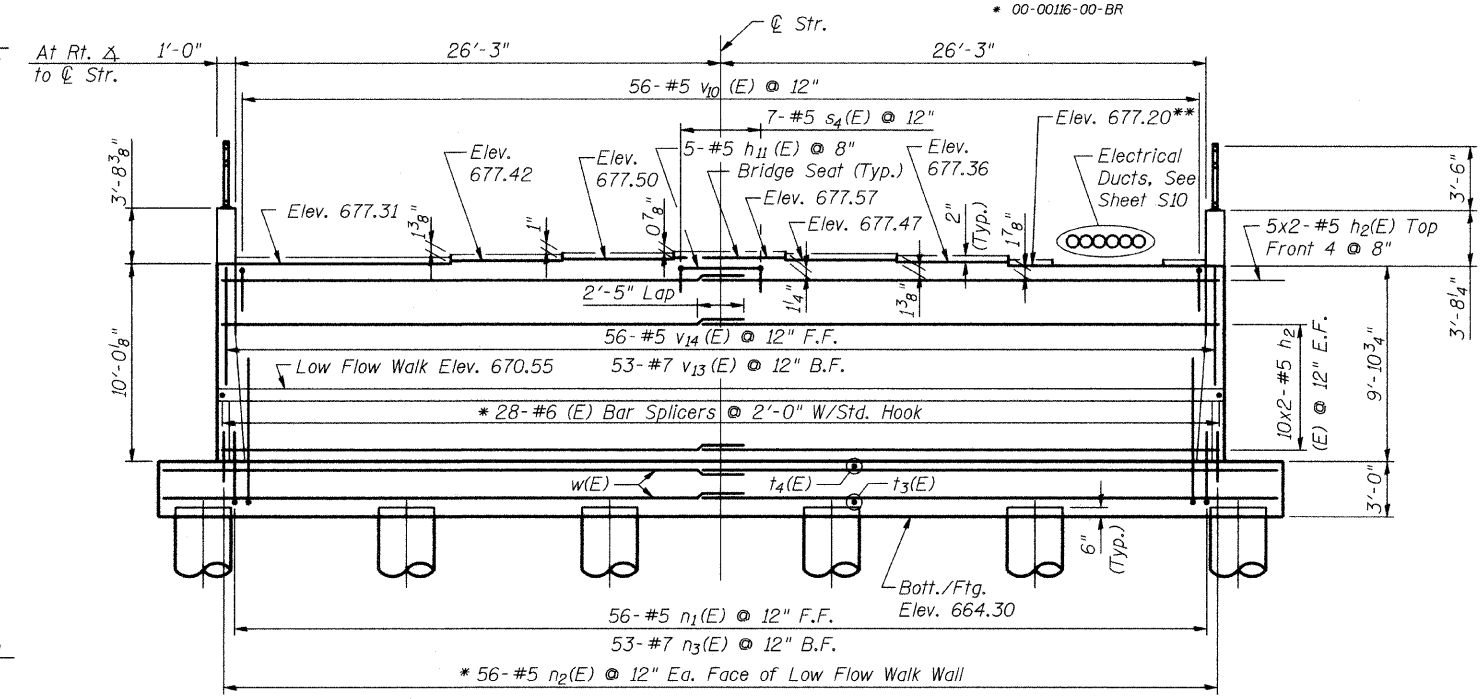

ELEVATION

* See Low-Flow Walkway Sht. S23 for details.

** Rear Haunch to remain level with Bridge Seat between Beams 1 and 2. See Sht. S10 of S34.

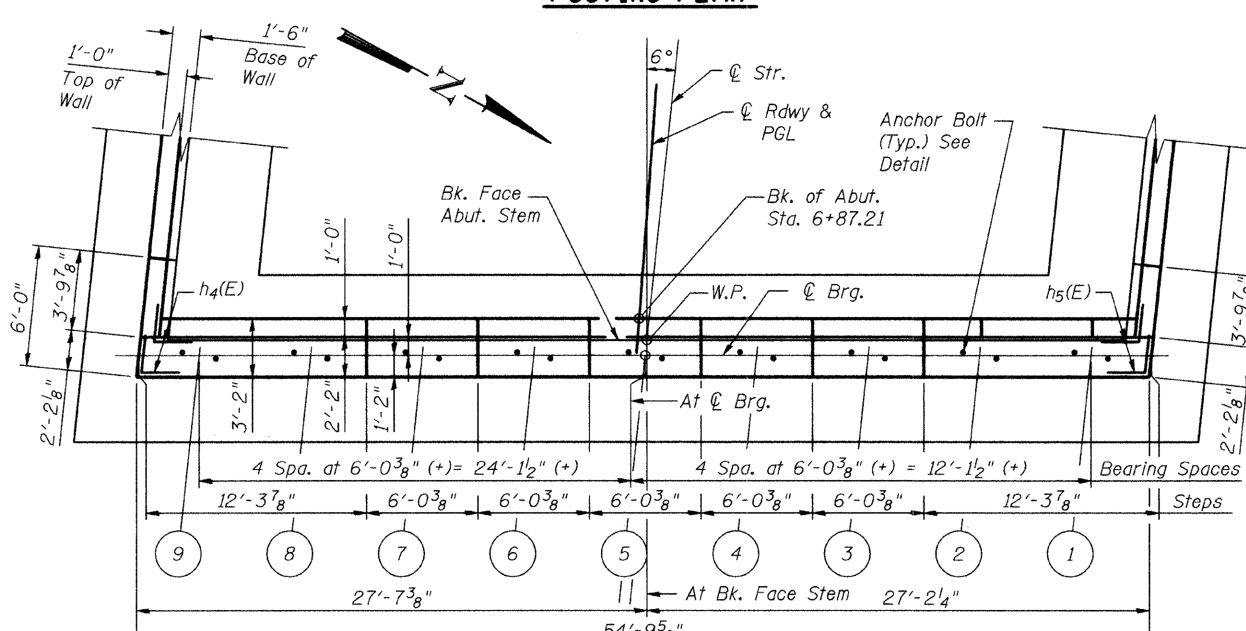

TOP PLAN

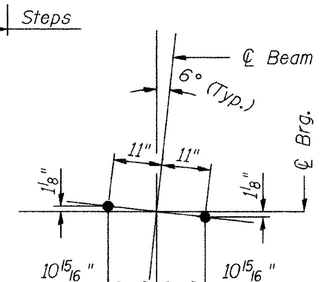

ANCHOR BOLT LOCATION

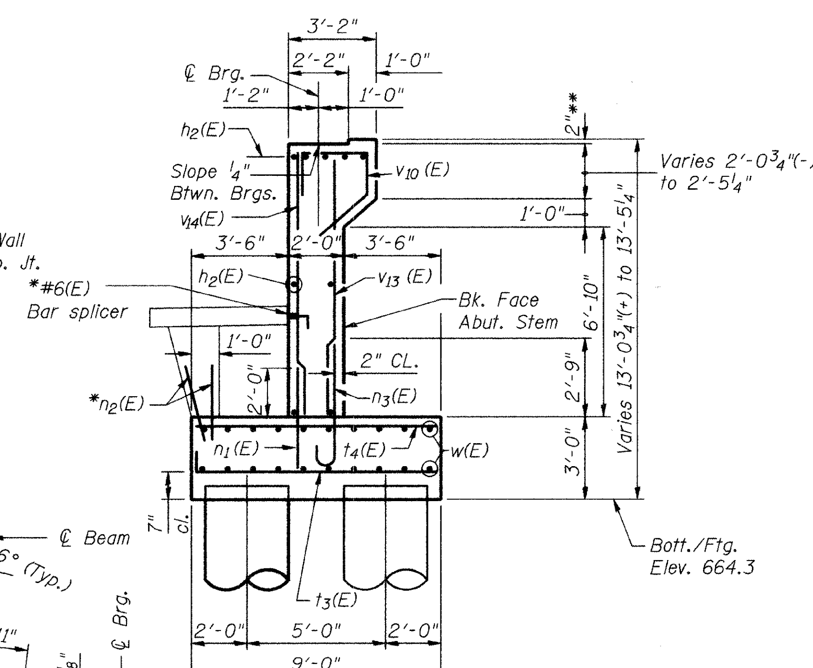

SECTION A-A

Note:
Space cap reinforcement to miss anchor bolts.
Bars indicated thus 12x2-#6w etc. indicates
12 lines of bars with 2 lengths per line.

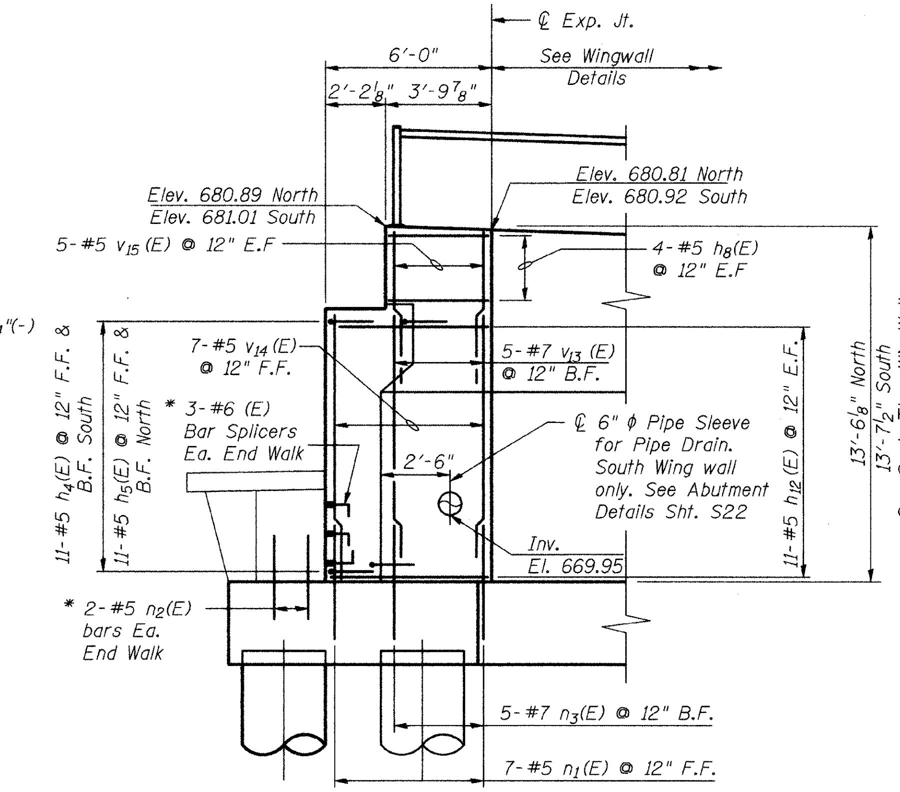

VIEW B-B

DESIGNED	JJI
CHECKED	SRT
DRAWN	GM
CHECKED	SRT

Bellinger, Lach & Associates, Inc.

WEST ABUTMENT PLAN AND ELEVATION

JEFFERSON AVENUE OVER
WEST BRANCH DUPAGE RIVER
FAU 3570 SECTION 00-00116-00-BR
DUPAGE COUNTY
STA. 7+64.45
STRUCTURE NUMBER 022-6756