F.A.U. ROUTE NO.	SECTION	COUNTY	TOTAL SHEETS	SHEET NO.
2552	•	DUPAGE	563	339
FED. ROAD DIST. NO.	ILLINOIS	FED. AID PROJECT-		

SHEET NO. - 25
50 SHEETS

• 00-00114-00-PV CONTRACT NO. 63024

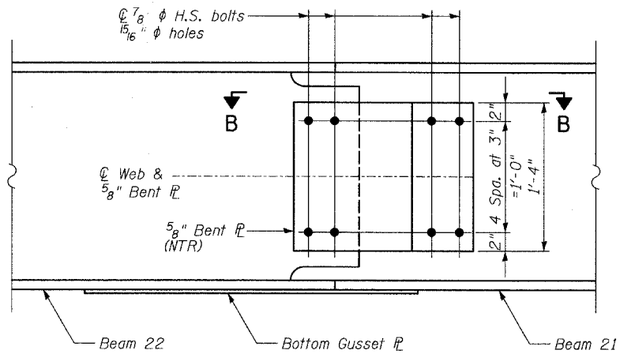

BEAM CONNECTION-ELEVATION

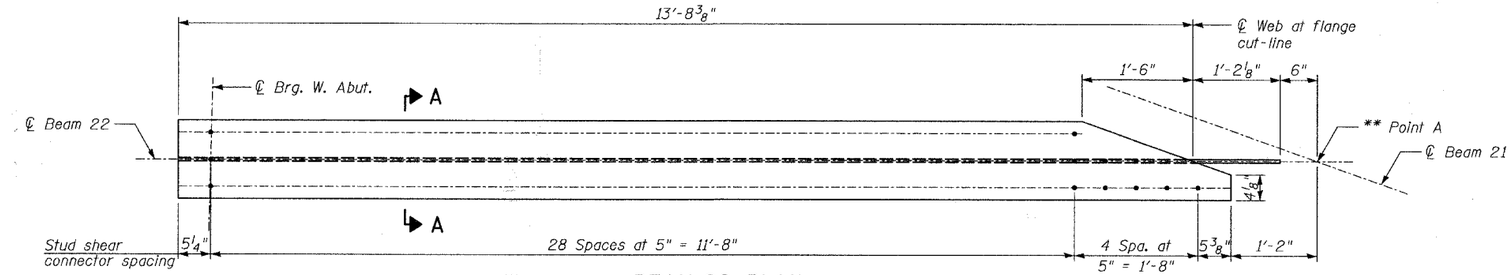

BEAM 22-PLAN

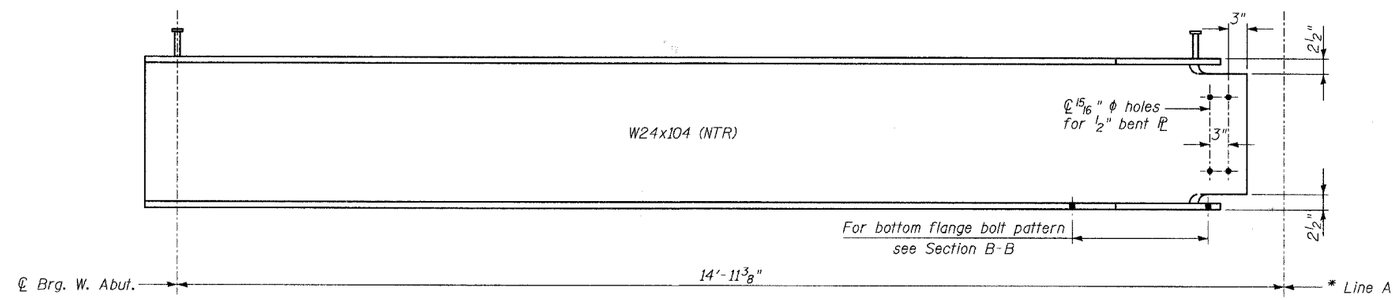

BEAM 22-ELEVATION

* Line A is the intersection of ℄ web planes of Beams 21 & 22.

** Point A is the projection of Line A.

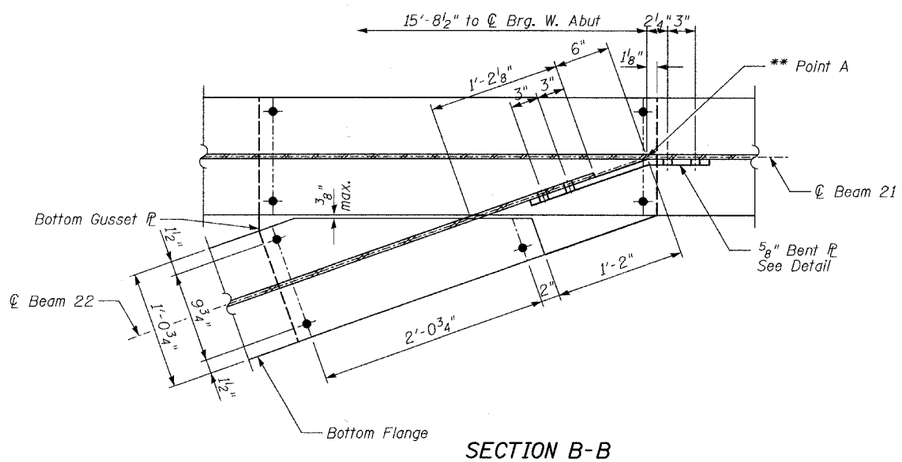

SECTION B-B

Note: Connection between bent plate and the coped web of Beam 22 shall be shop-bolted.

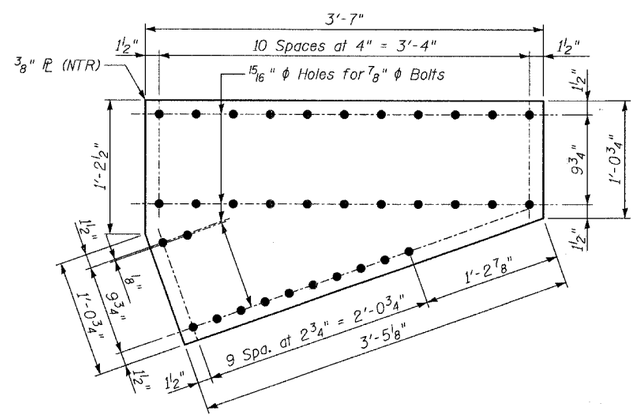

BOTTOM GUSSET PLATE-PLAN

Note: Connection between bottom flange of Beam 22 and bottom gusset plate shall be shop-bolted.

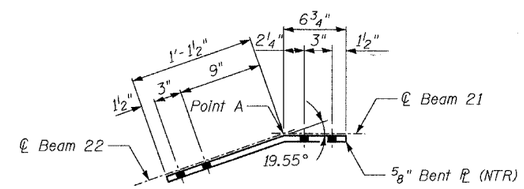

BENT PLATE

℄ 5/8" x 1'-4" x 1'-8 1/4"

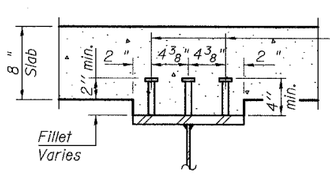

3/4" ϕ Granular or solid flux filled headed studs, automatically end welded to flange. (93 Required)

SECTION A-A

Notes: Bent Plate and Bottom Gusset Plate shall be AASHTO M 270 Grade 50W and NTR.

NTR denotes plates to which Notch Toughness Requirements are applicable

TYLIN INTERNATIONAL

DESIGNED	- PL
CHECKED	- SP
DRAWN	- PL
CHECKED	- SP

REVISIONS	
NAME	DATE

STRUCTURAL STEEL DETAILS

75th STREET OVER THE
WEST BRANCH OF THE DUPAGE RIVER
FAP 369
SECTION 00-00114-00-PV STA. 151+38.03
DUPAGE COUNTY
S.N. 022-3118