F.A.U. ROUTE NO.	SECTION	COUNTY	TOTAL SHEETS	SHEET NO.
2552	*	DUPAGE	563	352
FED. ROAD DIST. NO.	ILLINOIS	FED. AID PROJECT-		

SHEET NO. - 38
50 - SHEETS

* 00-00114-00-PV CONTRACT NO. 63024

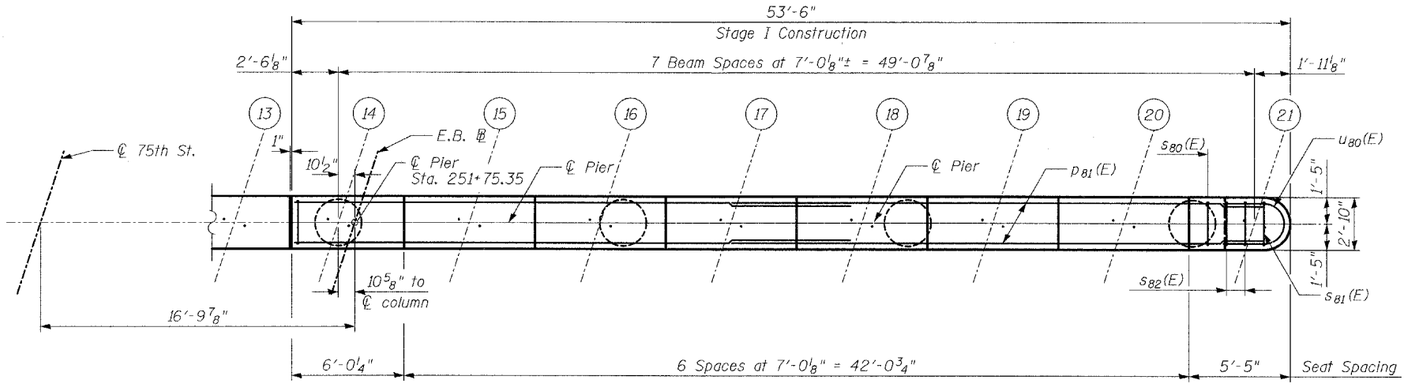

TOP PLAN

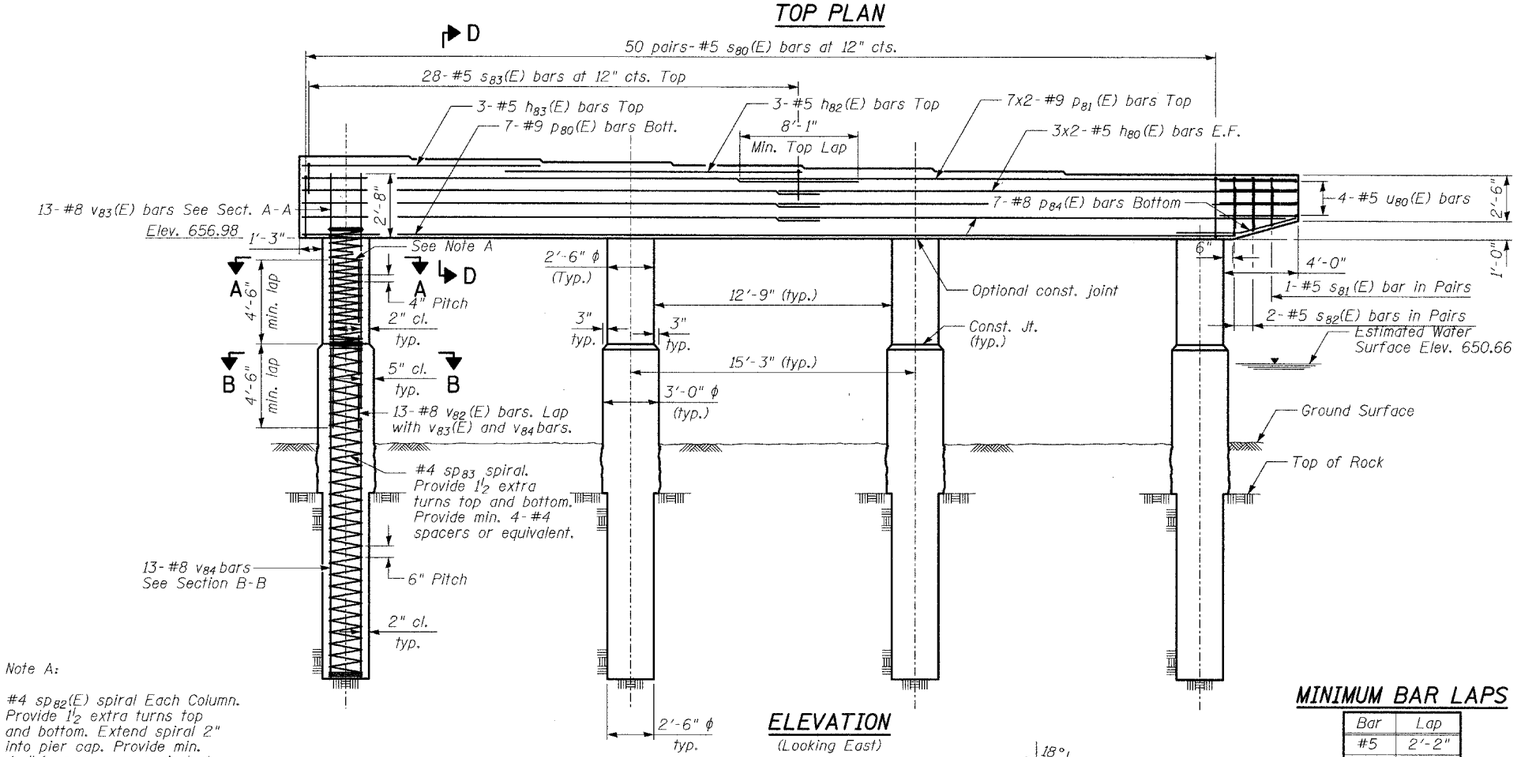

ELEVATION
(Looking East)

Note A:

#4 sp82(E) spiral Each Column. Provide 1 1/2 extra turns top and bottom. Extend spiral 2" into pier cap. Provide min. 4-#4 spacers or equivalent.

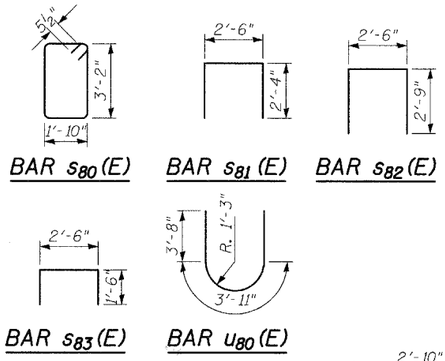

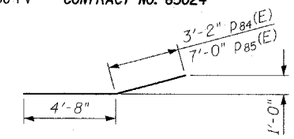

BAR p84(E) & p85(E)

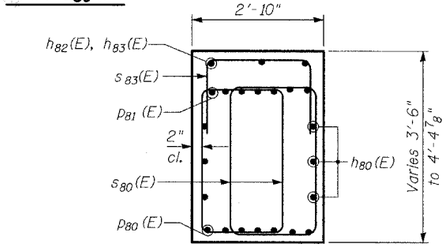

SECTION D-D

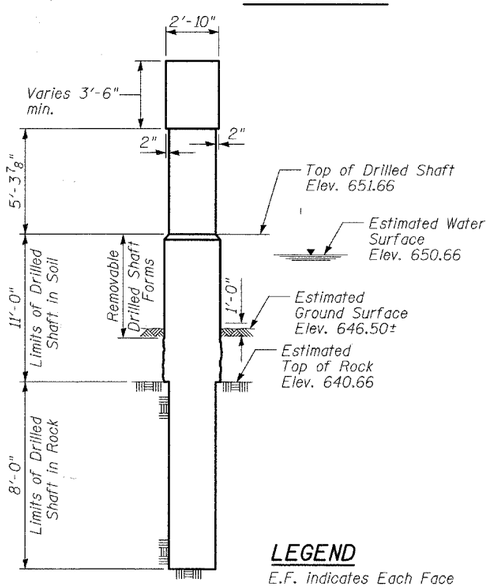

BILL OF MATERIAL

Bar	No.	Size	Length	Shape
h80(E)	12	#5	27'-9"	
h81(E)	18	#5	31'-3"	
h82(E)	3	#5	16'-0"	
h83(E)	3	#5	12'-8"	
h84(E)	3	#5	23'-3"	
h85(E)	3	#5	48'-9"	
h86(E)	3	#5	21'-3"	
p80(E)	7	#9	49'-8"	
p81(E)	14	#9	30'-0"	
p82(E)	14	#9	48'-1"	
p83(E)	14	#9	44'-3"	
p84(E)	7	#8	7'-10"	
p85(E)	7	#8	11'-8"	
s80(E)	266	#5	10'-11"	
s81(E)	4	#5	7'-2"	
s82(E)	12	#5	8'-0"	
s83(E)	99	#5	5'-6"	
** sp82(E)	10	#4	5'-4"	
** sp83	10	#4	19'-0"	
u80(E)	8	#5	11'-3"	
v82(E)	130	#8	9'-0"	
v83(E)	130	#8	8'-0"	
v84	130	#8	19'-0"	
Concrete Structures			Cu Yd	73.9
Reinforcement Bars			Pound	8,480
Reinforcement Bars, Epoxy Coated			Pound	19,300
Drilled Shaft in Soil			Cu Yd	28.8
Drilled Shaft in Rock			Cu Yd	14.6

Minimum lap for spirals = 1'-8"
** Length is height of spiral.

MINIMUM BAR LAPS

Bar	Lap
#5	2'-2"
#9	5'-9"

Typical unless noted otherwise

LEGEND

E.F. indicates Each Face

SEAT ELEVATIONS

BEAM #	14	15	16	17	18	19	20	21
ELEVATION	661.38	661.23	661.08	660.93	660.78	660.63	660.48	660.48
STEP HT.	1 3/4"	1 3/4"	1 3/4"	1 3/4"	1 3/4"	1 3/4"	0"	

* If the prevailing water surface elevation during construction is consistently different than estimated on the plans, the contractor may propose an adjustment to the top of the drilled shaft elevation as part of their installation procedure. The top of all drilled shafts within a substructure unit shall be constructed to the same elevation and extend above the prevailing water surface. The quantities and reinforcement detailing are based on the top of shaft and the estimated elevations shown and may change based on the actual elevations encountered at each shaft and the final top of shaft elevation.

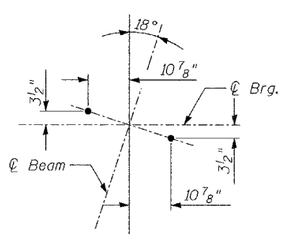

ANCHOR BOLT LAYOUT

NOTES

1. Cast Steps monolithically with cap.
2. Space reinforcement in pier to miss anchor bolts.
3. All edges shall have standard 3/4" chamfers.
4. Bars indicated thus: 7x2-#5 etc. indicates 7 lines of bars with 2 lengths per line.

TYLIN INTERNATIONAL

DESIGNED	PL
CHECKED	SP
DRAWN	PL
CHECKED	SP

REVISIONS	
NAME	DATE

PIER 2 - SOUTH HALF

75th STREET OVER THE
WEST BRANCH OF THE DUPAGE RIVER
FAP 369
SECTION 00-00114-00-PV STA. 151+38.03
DUPAGE COUNTY
S.N. 022-3118