F.A.U. ROUTE NO.	SECTION	COUNTY	TOTAL SHEETS	SHEET NO.
2552	*	DUPAGE	563	355
FED. ROAD DIST. NO.	ILLINOIS	FED. AID PROJECT		

SHEET NO. - 41
50 - SHEETS

* 00-00114-00-PV CONTRACT NO. 63024

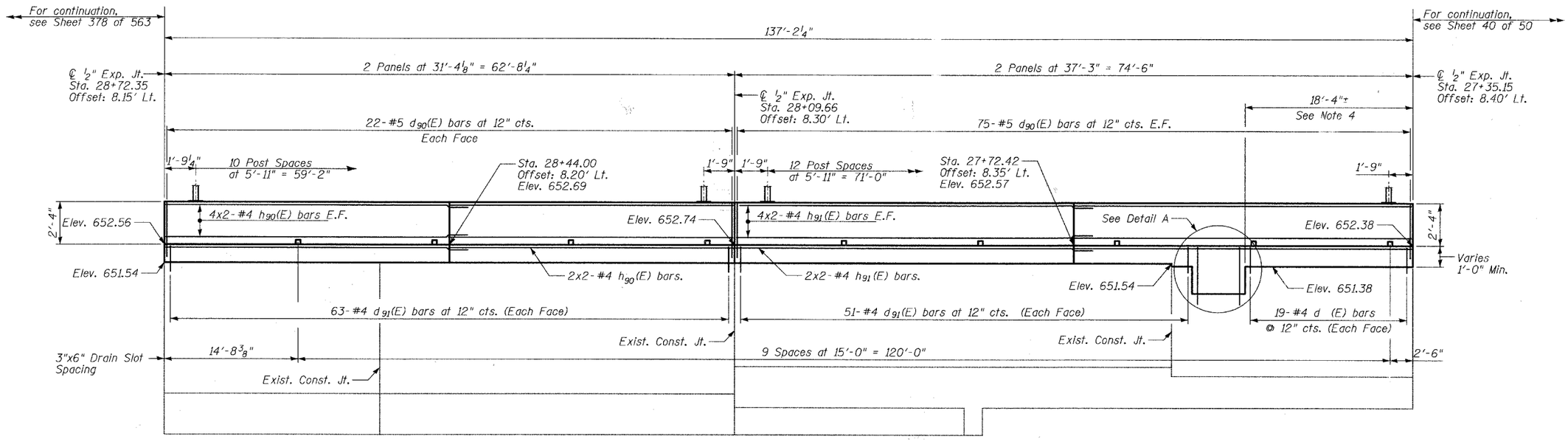

ELEVATION - WEST ABUTMENT

(Looking West)

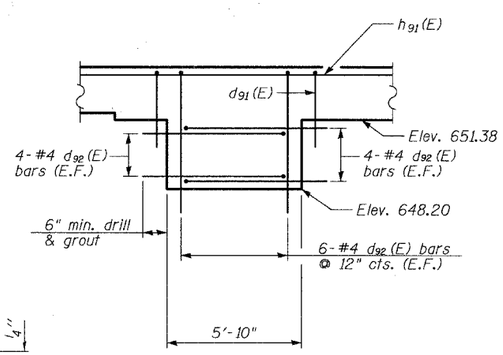

DETAIL A

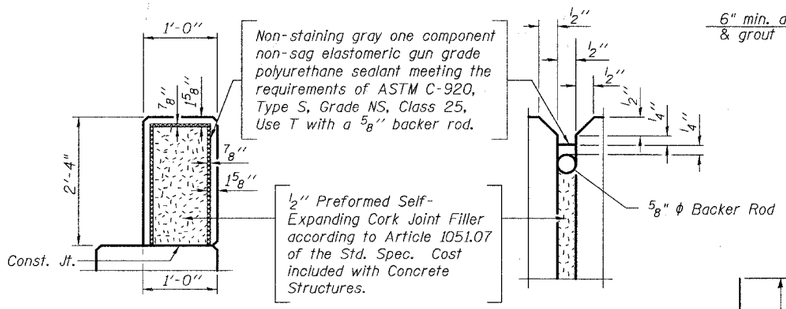

BARRIER WALL JOINT DETAILS

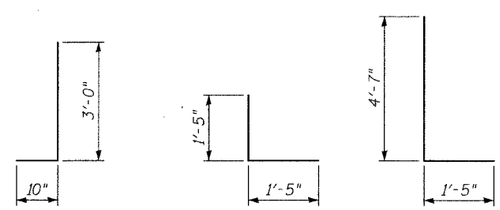

BAR $d_{90}(E)$ BAR $d_{91}(E)$ BAR $d_{92}(E)$

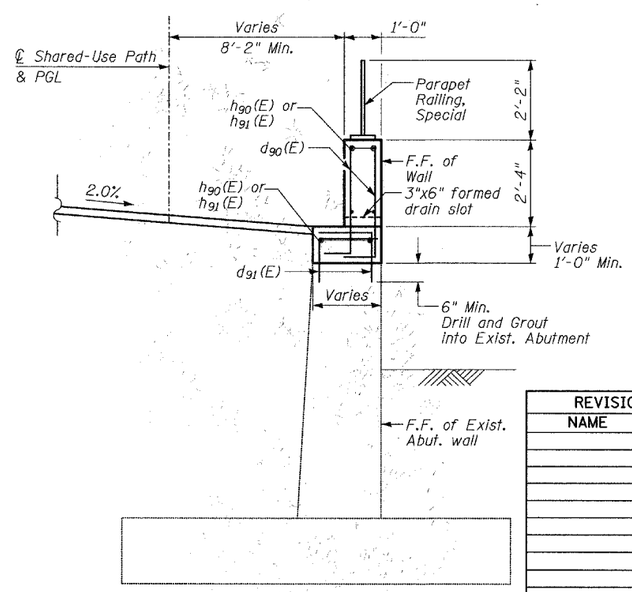

TYPICAL SECTION

BILL OF MATERIAL

Bar	No.	Size	Length	Shape
$d_{90}(E)$	288	#5	3'-10"	
$d_{91}(E)$	288	#4	2'-10"	
$d_{92}(E)$	12	#4	6'-0"	
$h_{90}(E)$	30	#4	20'-6"	
$h_{91}(E)$	30	#4	24'-6"	
Reinforcement Bars, Epoxy Coated			LB	2,670
Concrete Structures			CU YD	23

NOTES

1. For details of Parapet Railing, Special, See Sheet 19.
2. All offsets are measured from ℄ Shared-Use path to B.F. of Wall.
3. Drill and Epoxy Grout $d_{91}(E)$ & $d_{92}(E)$ bars according to Article 584 of the Standard Specifications. The cost shall be included in "Reinforcement Bars, Epoxy Coated."
4. Dimension may need to be modified based on location of exist. 48" ϕ storm sewer on Sheet 3.

TYLIN INTERNATIONAL

DESIGNED	TB
CHECKED	SP
DRAWN	TB
CHECKED	SP

REVISIONS	
NAME	DATE

EXISTING WEST ABUTMENT RECONSTRUCTION DETAILS

75th STREET OVER THE WEST BRANCH OF THE DUPAGE RIVER
FAP 369
SECTION 00-00114-00-PV STA. 151+38.03
DUPAGE COUNTY
S.N. 022-3118