F.A.U. ROUTE NO.	SECTION	COUNTY	TOTAL SHEETS	SHEET NO.
2552	*	DUPAGE	563	368
FED. ROAD DIST. NO.		ILLINOIS	FED. AID PROJECT-	

SHEET NO. - 4

8 - SHEETS

* 00-00114-00-PV CONTRACT NO. 63024

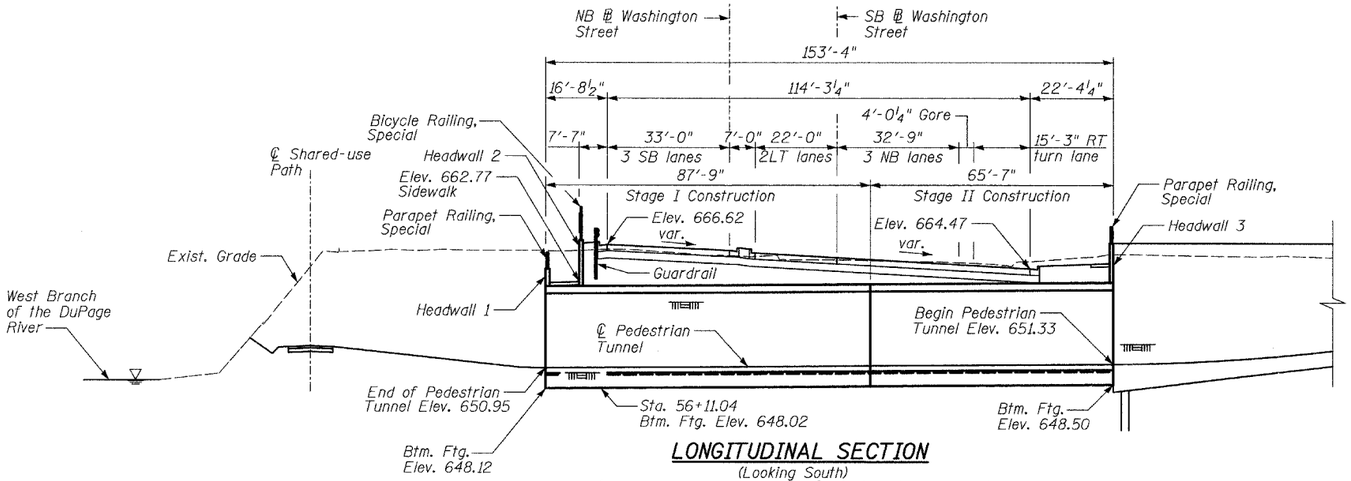

LONGITUDINAL SECTION

(Looking South)
(Elevations shown are at the ℄ of Pedestrian Tunnel)

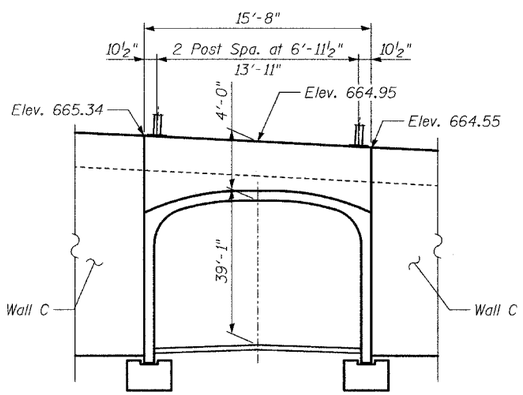

HEADWALL 1

(Looking West)

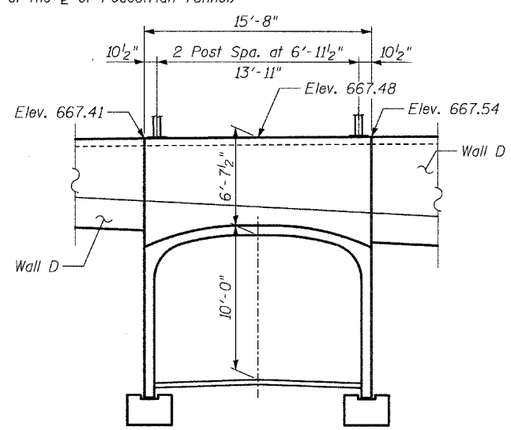

HEADWALL 2

(Looking West)

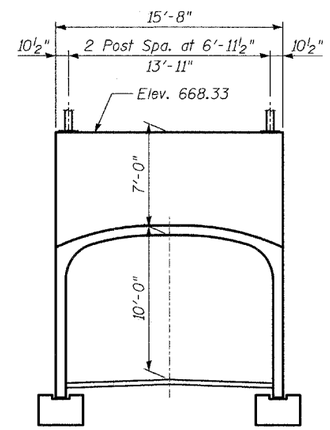

HEADWALL 3

(Looking East)

NOTES

1. All cost of furnishing and installing the headwalls as shown on this sheet shall be included in "Precast Concrete Substructure" Headwalls #2 and #3 shall be designed to also accomodate a horizontal vehicular impact service load of 0.70 kips./ft applied at the top of headwall.
2. See Sheet 6 for details of the Railing to be attached to the headwalls.
3. Length of headwall is based on a 3-Sided precast concrete structure with 10" thick walls. The length of the headwall shall be adjusted accordingly.

TY·LIN INTERNATIONAL

DESIGNED -	DE
CHECKED -	SP
DRAWN -	DE
CHECKED -	SP

REVISIONS	
NAME	DATE

PEDESTRIAN TUNNEL
PRECAST HEADWALL DETAILS

WASHINGTON - 75TH STREET
F.A.U. ROUTE 2552
SECTION 00-00114-00-PV
DUPAGE COUNTY

\ped tunnel\tunnelheadwalls.dgn 4/10/2008 1:15:40 PM