F.A.U. ROUTE NO.	SECTION	COUNTY	TOTAL SHEETS	SHEET NO.
2552	*	DUPAGE	563	406
FED. ROAD DIST. NO.		ILLINOIS	FED. AID PROJECT-	

SHEET NO. - 9
13 - SHEETS

* 00-00114-00-PV CONTRACT NO. 63024

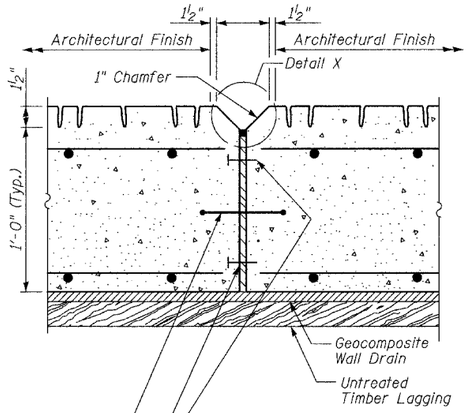

½" Preformed Joint Filler with Concrete Nails, Flat Head C.S. 1" Long @ 12" Cts. Vertical. Cost Included with Concrete Structures.

6" Hollow Bulb Type Non-Metallic Water Seal. Cost included with "Concrete Structures" Extend from bottom of facing to 6" below top of facing.

EXPANSION JOINT DETAIL

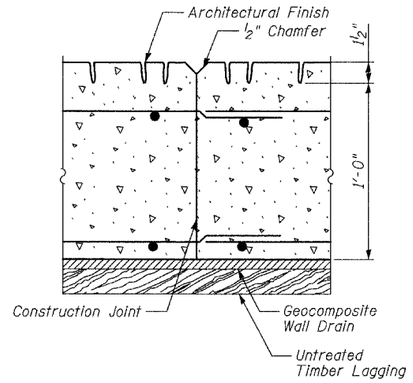

CONSTRUCTION JOINT DETAIL

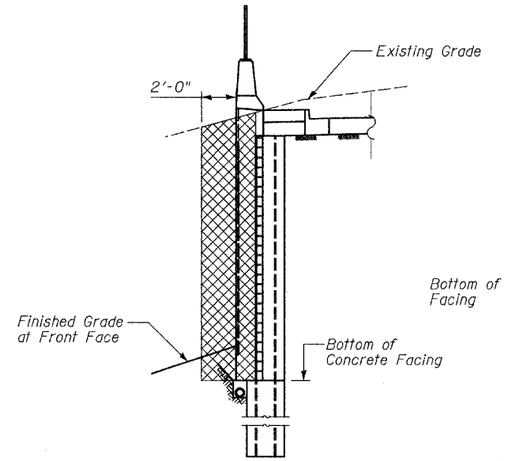

STRUCTURE EXCAVATION

(For Proposed Wall)

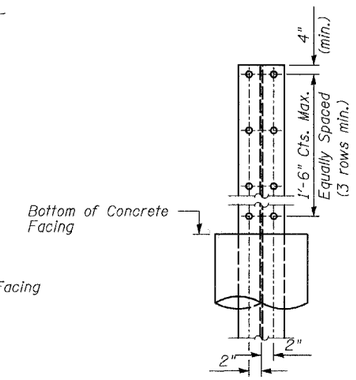

SHEAR STUD CONNECTOR DETAIL

(Use ¾" x 6" shear studs)

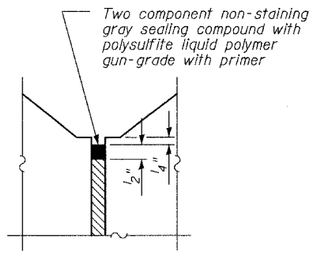

DETAIL X

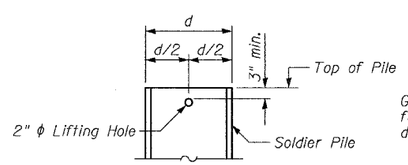

LIFTING HOLE DETAIL

Lifting hole to be provided if necessary. Cost included with "Furnishing Soldier Piles (W-Section) or (HP-Section).

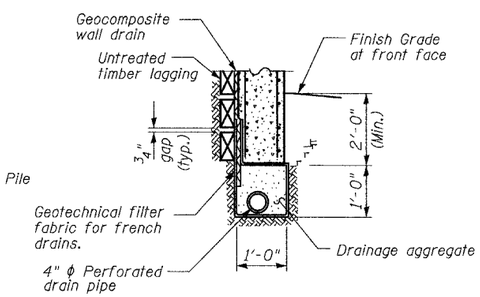

PIPE UNDERDRAIN DETAIL BETWEEN SOLDIER PILES

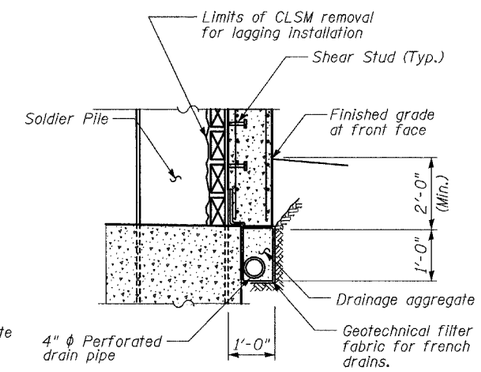

PIPE UNDERDRAIN DETAIL AT SOLDIER PILE

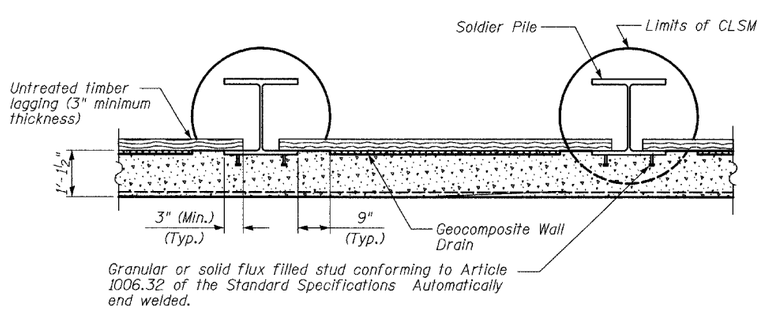

TYPICAL SECTION THRU WALL

NOTES:

1. The geocomposite wall drain shall be constructed according to Section 591 of the Standard Specifications.
2. Stud shear connectors shall be ¾" ϕ x 6" granular or solid flux filled headed studs, automatically end welded to the front flange of the soldier piles.

TY·LIN INTERNATIONAL

DESIGNED	- TB
CHECKED	- SP
DRAWN	- TB
CHECKED	- SP

REVISIONS	
NAME	DATE

WALLS C AND D
MISCELLANEOUS DETAILS

WASHINGTON - 75TH STREET
F.A.U. ROUTE 2552
SECTION 00-00114-00-PV
DUPAGE COUNTY

\7bwallscdd12.dgn 4/10/2008 1:15:12 PM