85393

F.A. RTE.	SECTION	COUNTY	TOTAL SHEETS	SHEET NO.
FAP734	98-00480-00-BR 03-00522-00-TL	WINNEBAGO	62	58
STA. _____		TO STA._____		
FED. ROAD DIST. NO. _	ILLINOIS	FED. AID PROJECT		

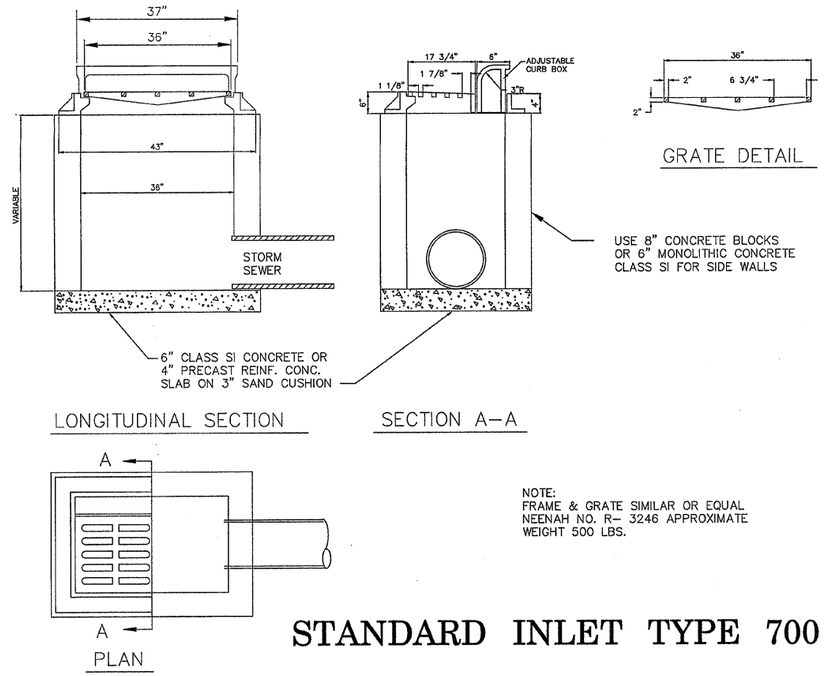

NOTE:
FRAME & GRATE SIMILAR OR EQUAL NEENAH NO. R- 3246 APPROXIMATE WEIGHT 500 LBS.

DTL-700

STANDARD INLET TYPE 700

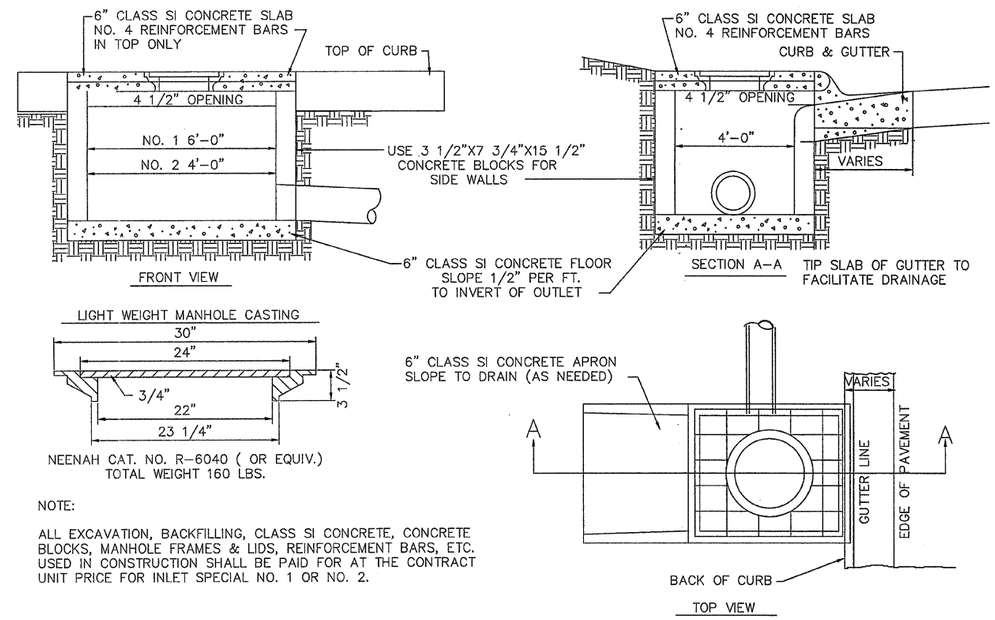

NOTE:

ALL EXCAVATION, BACKFILLING, CLASS SI CONCRETE, CONCRETE BLOCKS, MANHOLE FRAMES & LIDS, REINFORCEMENT BARS, ETC. USED IN CONSTRUCTION SHALL BE PAID FOR AT THE CONTRACT UNIT PRICE FOR INLET SPECIAL NO. 1 OR NO. 2.

DTL-IS2

INLET SPECIAL NO.'S 1 & 2

ITEM	DESCRIPTION
A	2" WHEEL VALVE
B	2" DIA. NIPPLE, MIN. 15" LONG
C	2" GALVANIZED ELBOW
D	MECHANICAL CAP OR PLUG WITH 2" TAPPED HOLE
E	VALVE BOXES WILL BE THE TYLER / UNION CAST IRON 6850 SERIES- WITH DEBRIS CAP & ADAPTER II INSTALLED
F	16"x 8"x 4" CONCRETE BLOCKING
G	UNDISTURBED SOIL
H	APPROVED GRANULAR, TRENCH BACKFILL MATERIAL

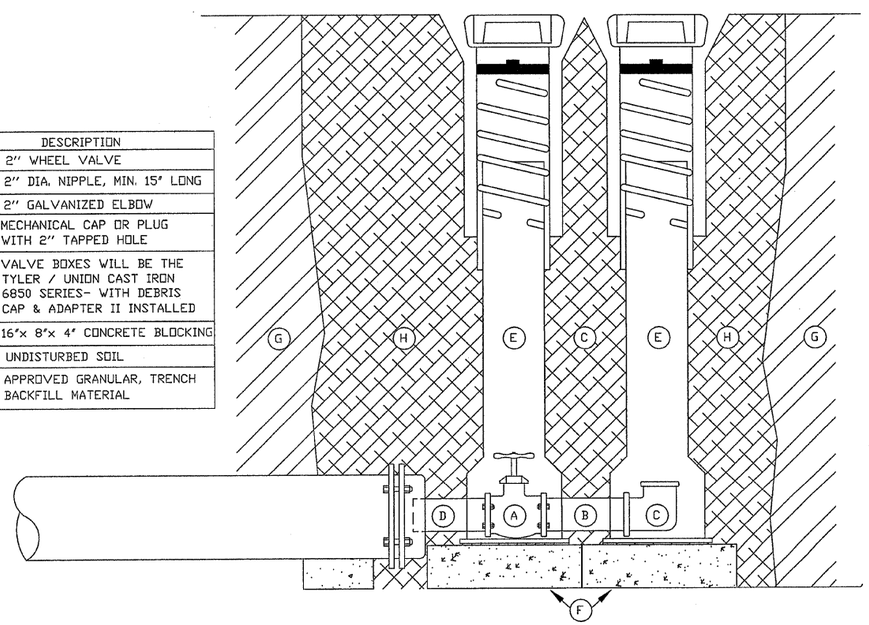

WDTL-BVI

BLEEDER VALVE BOX INSTALLATION

NOT TO SCALE

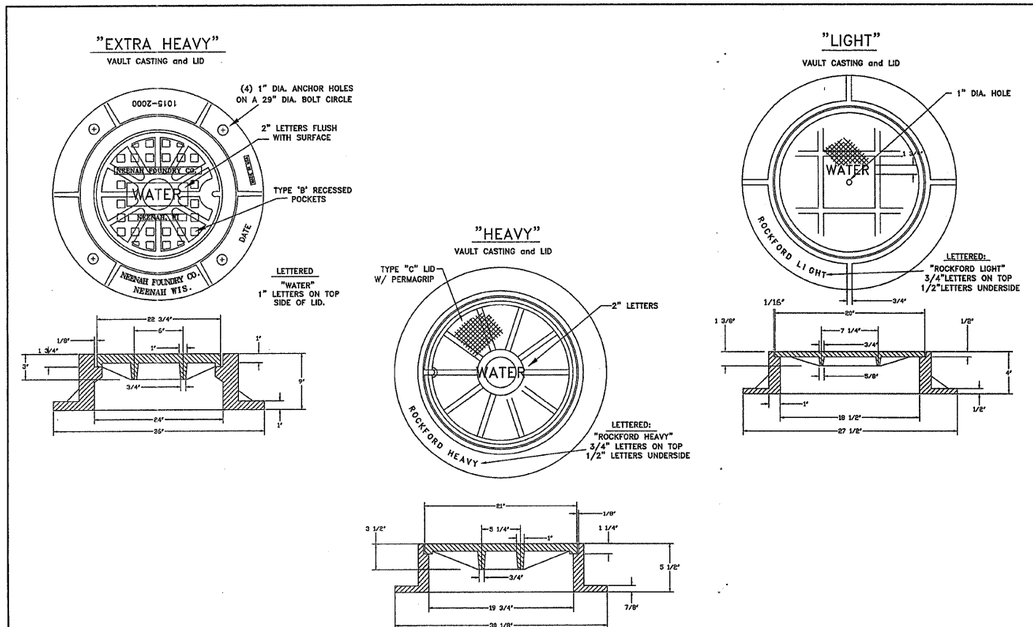

WDTL-CAST

WATER MANHOLE CASTING DETAIL

NOT TO SCALE