85393

F.A. RTE.	SECTION	COUNTY	TOTAL SHEETS	SHEET NO.
FAP734	98-00480-00-BR 03-00522-00-TL	WINNEBAGO	62	59
STA. _____		TO STA._____		
FED. ROAD DIST. NO. _	ILLINOIS	FED. AID PROJECT		

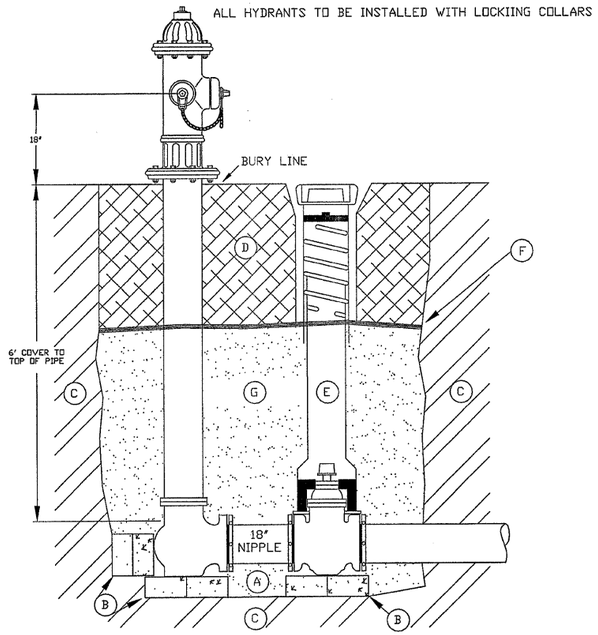

ITEM	DESCRIPTION
A	APPROVED BEDDING MATERIAL
B	16"x 8"x 4" CONCRETE BLOCKING
C	UNDISTURBED SOIL
D	APPROVED GRANULAR, TRENCH BACKFILL MATERIAL
E	VALVE BOXES WILL BE THE TYLER / UNION CAST IRON 6850 SERIES- WITH DEBRIS CAP & ADAPTER II INSTALLED OR APPROVED EQUAL
F	A WATER PERMEABLE GEOTEXTILE IS TO BE PLACED BETWEEN 1" WASHED STONE AND BACKFILL
G	VALVE AND HYDRANT TO BE BACK FILLED WITH- 1" WASHED STONE MINIMUM OF 24 INCHES IN DEPTH

FIRE HYDRANT COMPLETE

WDTL-FH

NOT TO SCALE

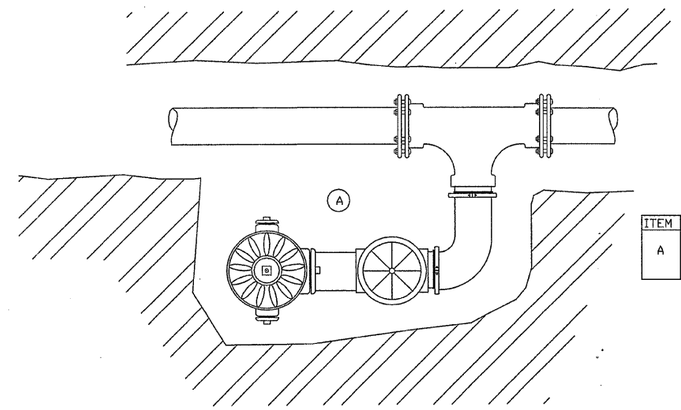

ITEM	DESCRIPTION
A	SEE FIRE HYDRANT DETAIL SHEET FOR ALL SPECIFICATIONS

OFFSET FIRE HYDRANT COMPLETE WITH ELL

WDTL-FHO

NOT TO SCALE

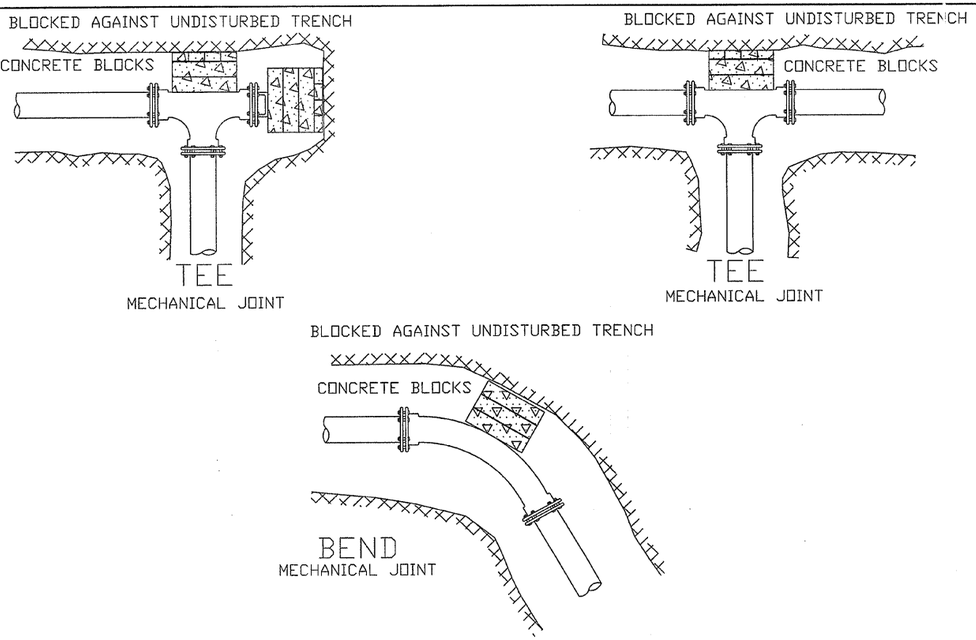

THRUST BLOCK INSTALLATIONS

WDTL-THBK

NOT TO SCALE

VALVE INSTALLATION

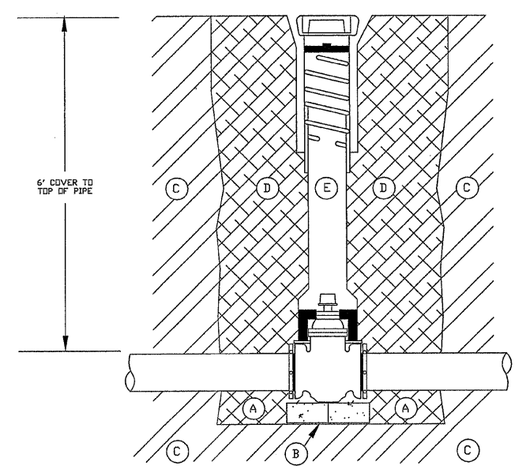

ITEM	DESCRIPTION
A	APPROVED BEDDING MATERIAL
B	16"x 8"x 4" CONCRETE BLOCKING
C	UNDISTURBED SOIL
D	APPROVED GRANULAR, TRENCH BACKFILL MATERIAL
E	VALVE BOXES WILL BE THE TYLER / UNION CAST IRON 6850 SERIES- WITH DEBRIS CAP & ADAPTER II INSTALLED OR APPROVED EQUAL

VALVE & VALVE BOX DETAIL

WDTL-VB

NOT TO SCALE