F.A.-RTE.	SECTION	COUNTY	TOTAL SHEETS	SHEET NO.
FAP734	98-00480-00-BR 03-00522-00-TL	WINNEBAGO	62	62
STA. _____	TO STA. _____			
FED. ROAD DIST. NO. _	ILLINOIS	FED. AID PROJECT		

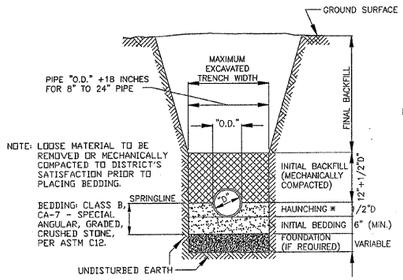

CLAY, RCP & DIP PIPE BEDDING DETAIL

*HAUNCHING TO BE WELL-TAMPED ALONG PIPE TO INSURE VOIDS ARE ELIMINATED

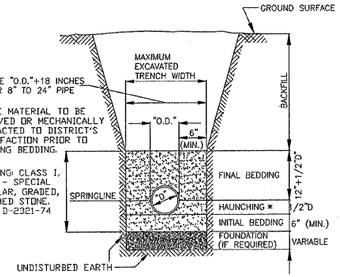

PVC PIPE BEDDING DETAIL

*HAUNCHING TO BE WELL-TAMPED ALONG PIPE TO INSURE VOIDS ARE ELIMINATED

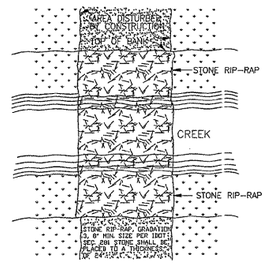

STONE RIP-RAP DETAIL

TYPICAL

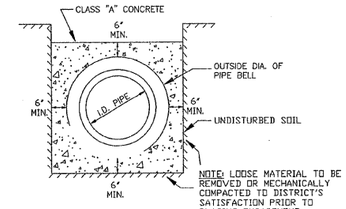

ENCASEMENT DETAIL

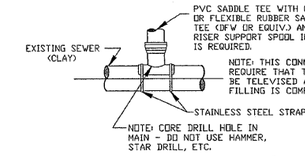

CUT-IN CONNECTION DETAIL (CLAY PIPE)

SEE SERVICE & SERVICE CLEANOUT RISER DETAIL

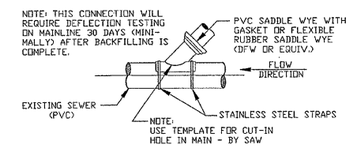

CUT-IN CONNECTION DETAIL (PVC PIPE)

SEE SERVICE & SERVICE CLEANOUT RISER DETAIL

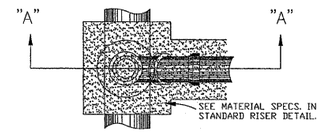

PLAN VIEW (RISER DETAIL)

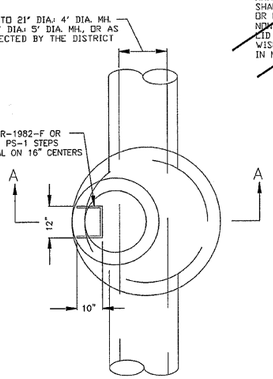

MANHOLE DETAIL - PLAN

NOTE:
THE MINIMUM ALLOWABLE MANHOLE SIZE WILL DEPEND UPON THE ANGULAR RELATIONSHIP BETWEEN PIPES ENTERING/EXITING THE MANHOLE. IN GENERAL THE ALLOWABLE MANHOLE SIZES SHALL BE AS FOLLOWS:
4' DIA. - FOR PIPE SIZES 8"- 21" DIA.
5' DIA. - FOR PIPE SIZES GREATER THAN 21" DIA. (OR AS DIRECTED BY THE DISTRICT)

NOTE: THE MAXIMUM DROP FROM THE FLOWLINE OF ANY PIPE IN A MANHOLE TO THE BENCH UNDER THAT PIPE SHALL BE 8". THIS INCLUDES STANDARD MANHOLES, DROP MANHOLES, AND MANHOLES CONSTRUCTED OVER EXISTING SEWERS.

NOTE: THE CONTRACTOR SHALL TAKE EXTREME CARE TO BACKFILL AND COMPACT BACKFILL IN MANHOLE EXCAVATION SUCH THAT IT MEETS R.R.W.R.D. DENSITY REQUIREMENTS.

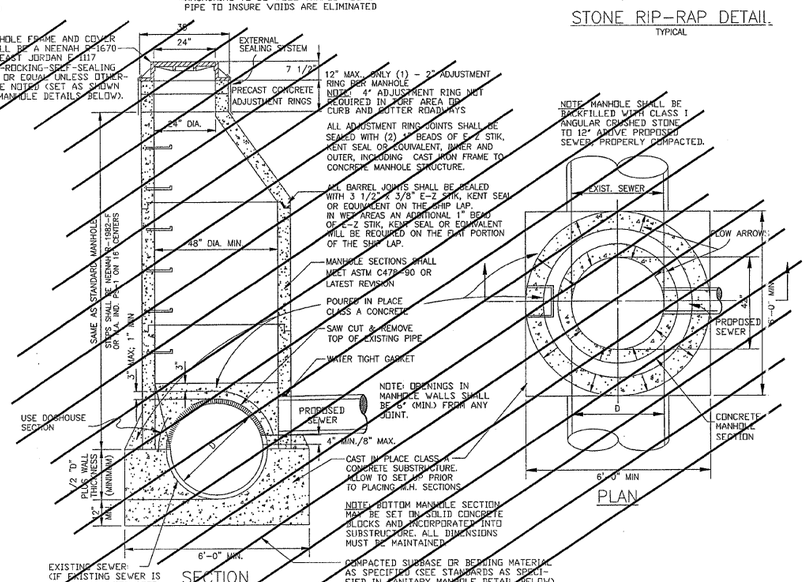

MANHOLE CONSTRUCTED OVER EXISTING SEWER

FOR 8" TO 36" SEWER, NOTES FOR SANITARY MANHOLE AND SANITARY DROP MANHOLE APPLY. FOR LARGER SEWER CONTACT THE DISTRICT.

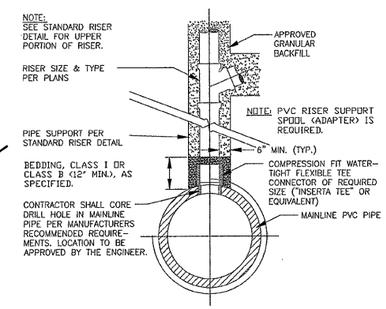

SERVICE CONNECTION FOR PVC TRUNK SEWER

FOR PIPE 18" IN DIA. OR LARGER

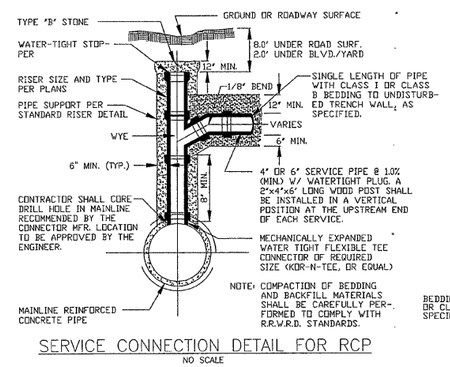

SERVICE CONNECTION DETAIL FOR RCP

NO SCALE

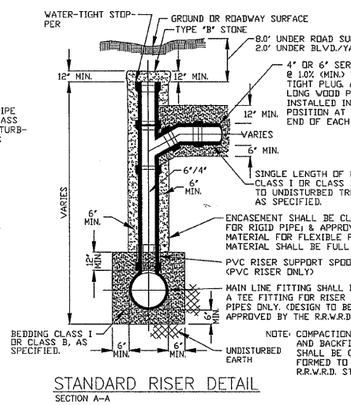

STANDARD RISER DETAIL

SECTION A-A

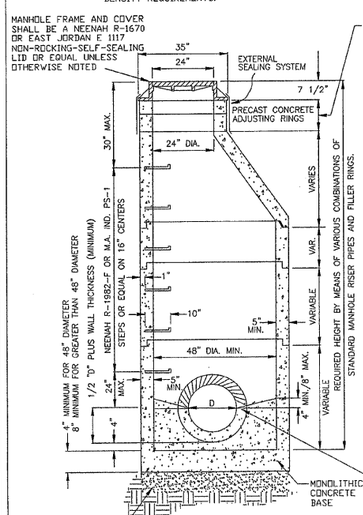

SANITARY MANHOLE DETAIL

SECTION A-A

12" MAX., ONLY (1) - 2" ADJUSTMENT RING PER MANHOLE
NOTE: 4" ADJUSTMENT RING NOT REQUIRED IN TURF AREA OR CURB AND GUTTER ROADWAYS

NOTES:

ALL ADJUSTMENT RING JOINTS SHALL BE SEALED WITH (2) 1" BEADS OF E-Z STIK, KENT SEAL OR EQUIVALENT, INNER AND OUTER, INCLUDING CAST IRON FRAME TO CONCRETE MANHOLE STRUCTURE.

ALL BARREL JOINTS SHALL BE SEALED WITH 3 1/2"x 3/8" E-Z STIK, KENT SEAL OR EQUIVALENT ON THE SHIP LAP. IN WET AREAS AN ADDITIONAL 1" BEAD OF E-Z STIK, KENT SEAL OR EQUIVALENT WILL BE REQUIRED ON THE FLAT PORTION OF THE SHIP LAP.

MANHOLE STRUCTURE TO BE CONSTRUCTED OF PRE-CAST REINFORCED CONCRETE MANHOLE RISER PIPE. MANHOLE CONSTRUCTION SHALL CONFORM TO A.S.T.M. C478-90 OR LATEST DESIGNATION.

WHEN A CASTING REQUIRES PITCHING, A MINIMUM OF THREE SHIMS (PLASTIC OR METAL) EQUALLY SPACED TO PREVENT ROCKING SHALL BE INSTALLED BETWEEN THE CASTING AND THE MASONRY. HYDRAULIC CEMENT SHALL BE PLACED TO FILL THE SPACE BETWEEN THE CASTING & MASONRY.

60" I.D. MANHOLE WALLS SHALL BE 6" (MIN.) THICK.

PRE-CAST FLAT TOPS WILL NOT BE PERMITTED ON DISTRICT MANHOLES

PIPE CONNECTION TO PROPOSED MANHOLE SHALL BE MADE WATER-TIGHT BY MEANS OF RUBBER GASKET SEAL (A-LOK OR EQUAL), CONFORMING TO A.S.T.M. F-477, CAST INTEGRALLY IN MANHOLE WALL OR RUBBER GASKET SEAL AND STAINLESS STEEL CLAMP CONFORMING TO A.S.T.M. C-923.

PIPE CONNECTION TO EXISTING MANHOLE SHALL BE MADE WATER-TIGHT BY MEANS OF RUBBER GASKET SEAL AND STAINLESS STEEL CLAMP, CONFORMING TO A.S.T.M. C-923, PSX SERIES SIX OR EQUAL. PIPE ACCESS SHALL BE MADE BY CORE DRILLING MANHOLE WALL.

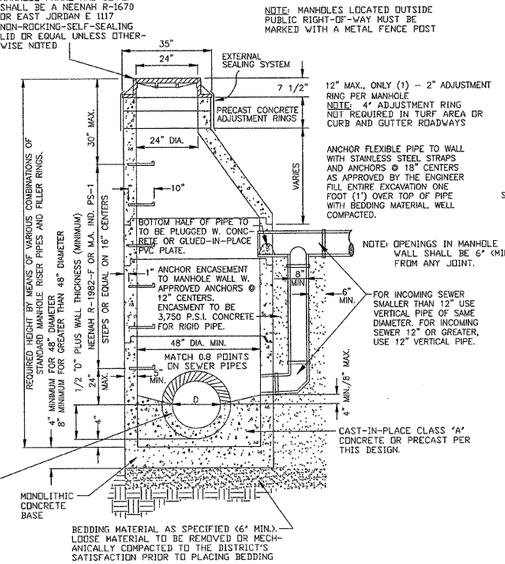

SANITARY DROP MANHOLE DETAIL

SECTION A-A

NOTE: MANHOLES LOCATED OUTSIDE PUBLIC RIGHT-OF-WAY MUST BE MARKED WITH A METAL FENCE POST

12" MAX., ONLY (1) - 2" ADJUSTMENT RING PER MANHOLE
NOTE: 4" ADJUSTMENT RING NOT REQUIRED IN TURF AREA OR CURB AND GUTTER ROADWAYS

ANCHOR FLEXIBLE PIPE TO WALL WITH STAINLESS STEEL STRAPS AND ANCHORS @ 18" CENTERS AS APPROVED BY THE ENGINEER FILL ENTIRE EXCAVATION ONE FOOT (1') OVER TOP OF PIPE WITH BEDDING MATERIAL, WELL COMPACTED.

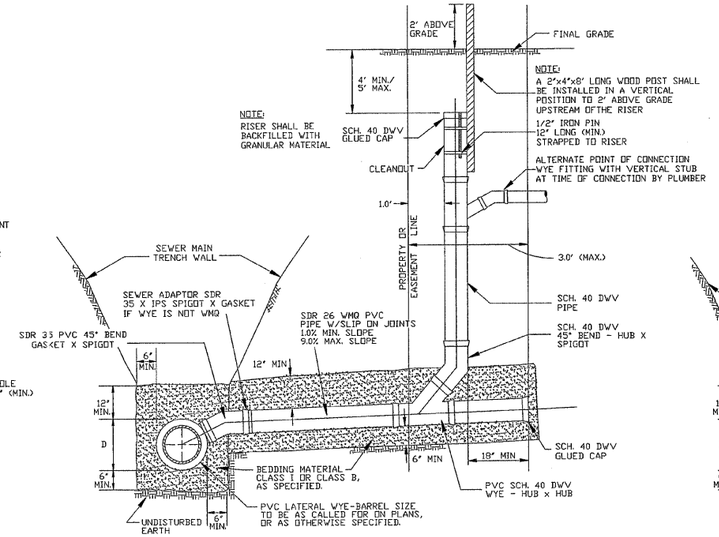

SERVICE & SERVICE CLEANOUT RISER

NO SCALE

NOTE: SANITARY SERVICES REQUIRED TO EXTEND MAX. 3' BEYOND R.O.W. LINE

ALL SCHEDULE 40 PVC PIPE AND FITTINGS SHALL MEET THE REQUIREMENTS OF ASTM D2665. ALL WMQ SDR 26 PVC PIPE AND FITTINGS SHALL MEET THE REQUIREMENTS OF ASTM D2241 AND D3139. ALL DWV FITTINGS SHALL BE CLEANED, PRIMED AND GLUED.

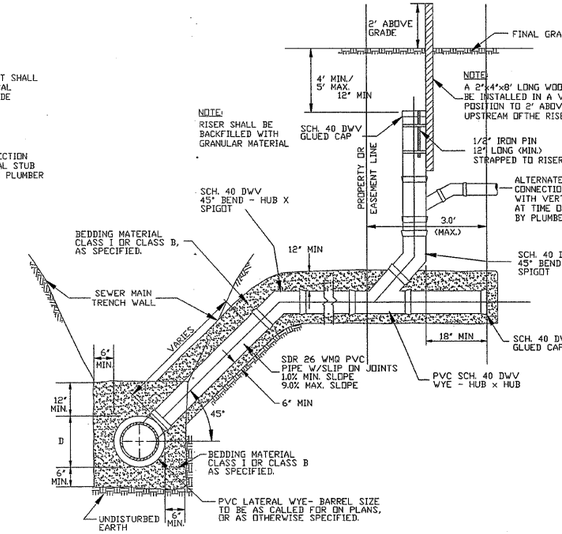

ALTERNATE SERVICE RISER DETAIL (WITH SERVICE CLEANOUT)

NO SCALE

NOTE: SANITARY SERVICES REQUIRED TO EXTEND MAX. 3' BEYOND R.O.W. LINE

ALL SCHEDULE 40 PVC PIPE AND FITTINGS SHALL MEET THE REQUIREMENTS OF ASTM D2665. ALL WMQ SDR 26 PVC PIPE AND FITTINGS SHALL MEET THE REQUIREMENTS OF ASTM D2241 AND D3139. ALL DWV FITTINGS SHALL BE CLEANED, PRIMED AND GLUED.

STANDARDS SHEET 5 OF 5

S.TRANS.1158D03.P207003.STANDARDS.DGN

WHA #1158D03

ROCK RIVER WATER RECLAMATION DISTRICT

3333 KISHWAUKEE ST., P.O. BOX 7480, ROCKFORD, ILLINOIS 61126-7480 - PH. (815) 387-7660/FAX (815) 387-7665

REV.: 1/5/97 PAD	REV.: 3/5/00 PAD	REV.: 5/14/03 PAD
REV.: 2/7/97 PAD	REV.: 1/10/01 PAD	REV.: 2/2/04 PAD
REV.: 3/19/98 PAD	REV.: 2/5/02 PAD	

STANDARD DETAIL SHEET

PLOT SCALE: 1"=50'

FILE: RRWRD.DWG

~~SHEET 14 OF 14~~