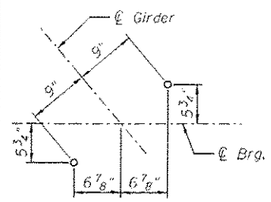

ANCHOR BOLT LAYOUT
GIRDERS D1 & D2

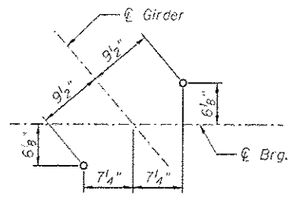

ANCHOR BOLT LAYOUT
GIRDER C1

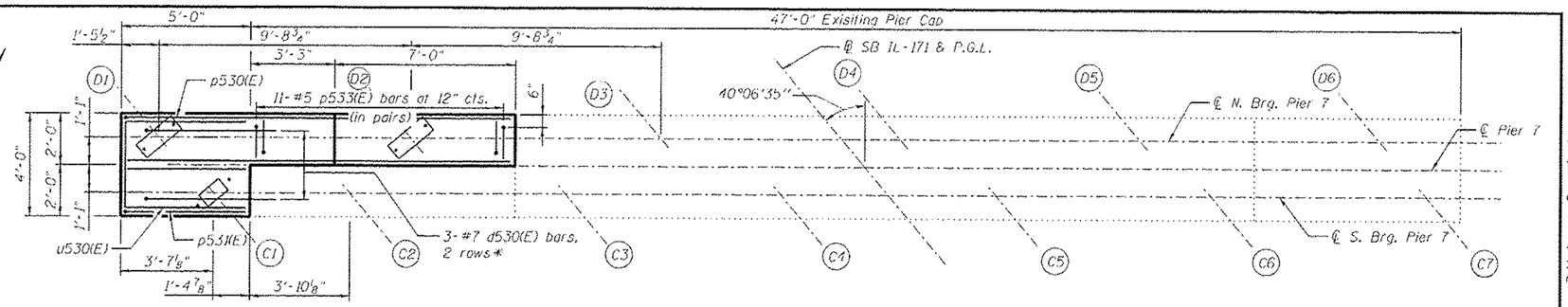

PIER 7 TOP PLAN

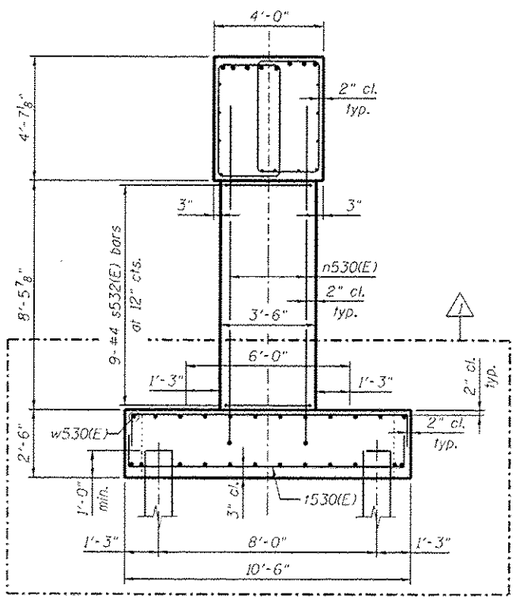

END VIEW

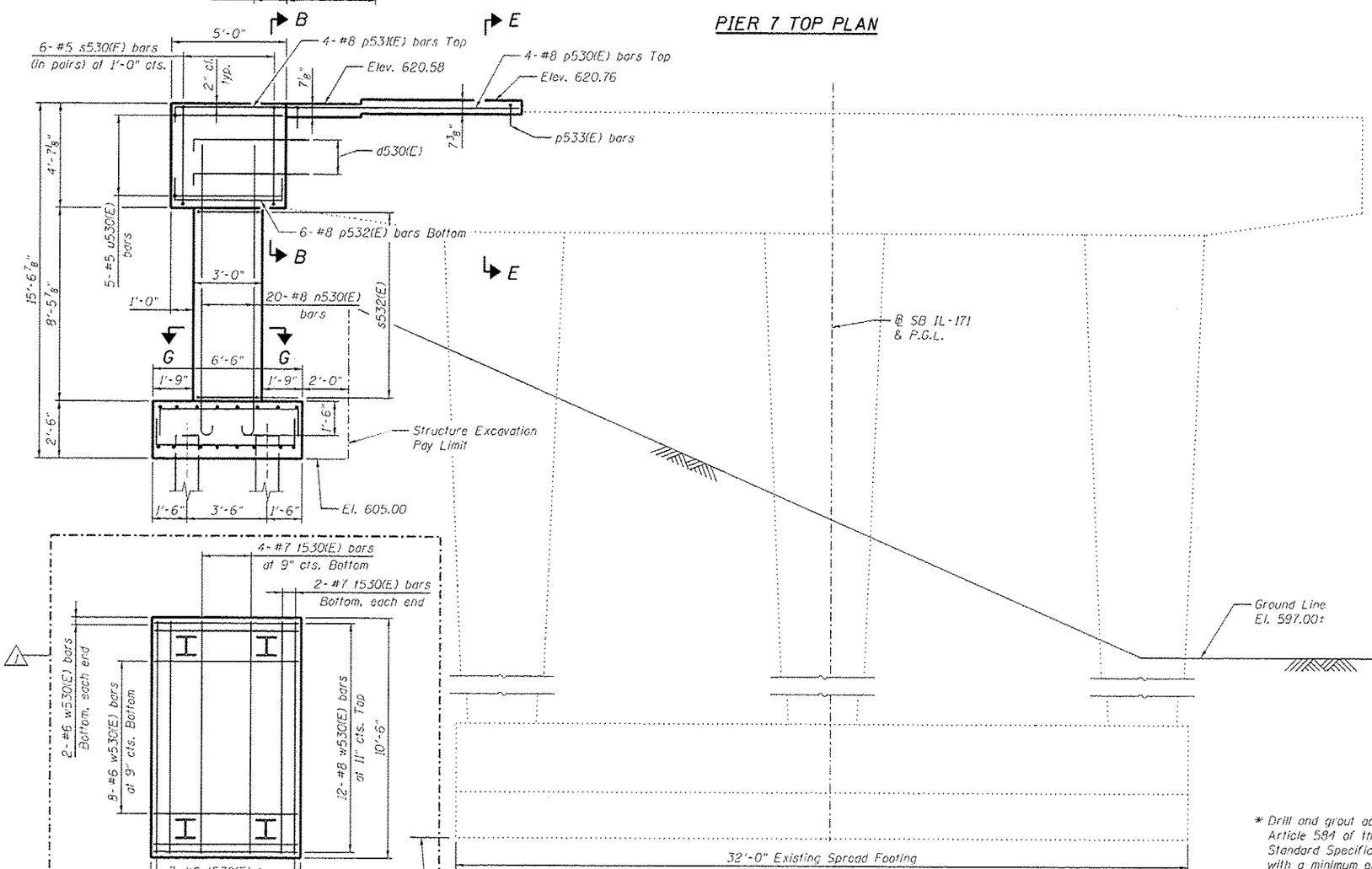

PIER 7 ELEVATION
(Looking Upstation)

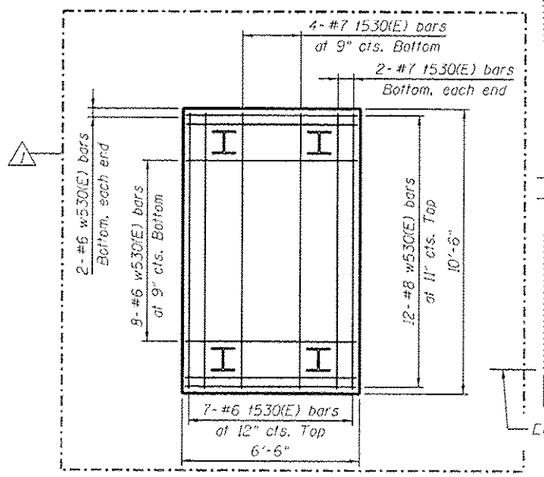

PIER 7 FOOTING PLAN

PILE DATA

Type: HP12x53 with Pile Shoes
Nominal Required Bearing: 394 kips
Allowable Resistance Available: 131 kips
Est. Length: 45 ft
No. Production Piles: 3
No. Test Piles: 1

NOTES:

1. Pour steps monolithically with cap.
2. See Sheet SG87 for Section B-B, Section E-E, and Section G-G.
3. See Sheet SG6 for pile layout.
4. See Sheet SG88 for Bar Bends and Bill of Material.

* Drill and grout according to Article 584 of the Standard Specifications with a minimum embedment of 8". Cost included with Concrete Structures.

benesch
engineers · scientists · planners
Alfred Benesch & Company
205 North Michigan Avenue, Suite 2400
Chicago, Illinois 60601
312-565-0450 Job No. 10093

FILE NAME = 0160486_60J16_084_Pier_7_Widening_Details.dgn	USER NAME = aharris	DESIGNED - AWH	REVISED - △1 9/11/2014 AWH	STATE OF ILLINOIS DEPARTMENT OF TRANSPORTATION	PIER 7 WIDENING DETAILS STRUCTURE NO. 016-0486	F.A.P. RTE. 373	SECTION 2013-038B-R	COUNTY COOK	TOTAL SHEETS 821 / SHEET NO. 674
		CHECKED - AJK	REVISED -					CONTRACT NO. 60J16	
	PLOT SCALE =	DRAWN - KMS	REVISED -						
	PLOT DATE = 9/11/2014	CHECKED - AJK	REVISED -		SHEET NO. SG84 OF SG100 SHEETS		ILLINOIS FED. AID PROJECT		

Y:\chicago\100005\10093\Eng_Docs_Phase_II\SN_016_0486_0487_1st_Ave_over_Canal\Final\Final_0486\0160486_60J16_084_Pier_7_Widening_Details.dgn 1:24:21 PM 9/11/2014