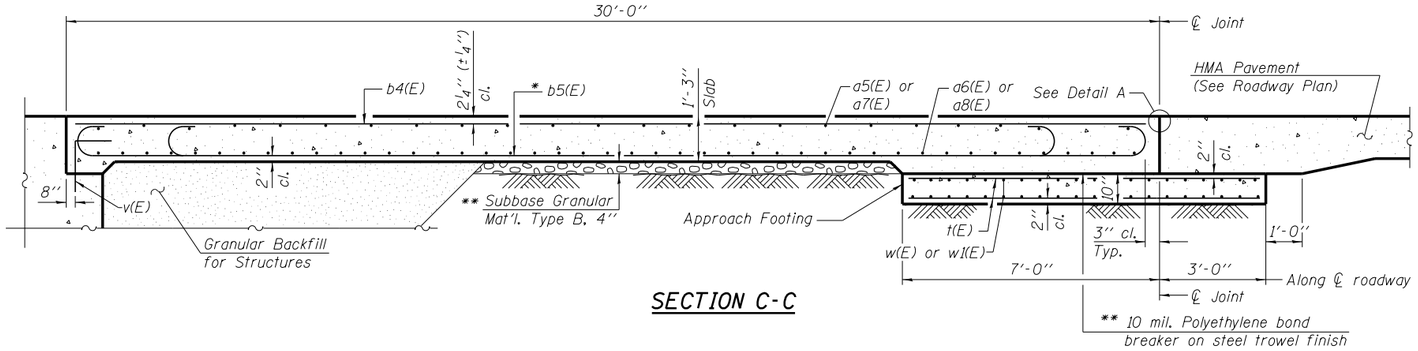

SECTION C-C

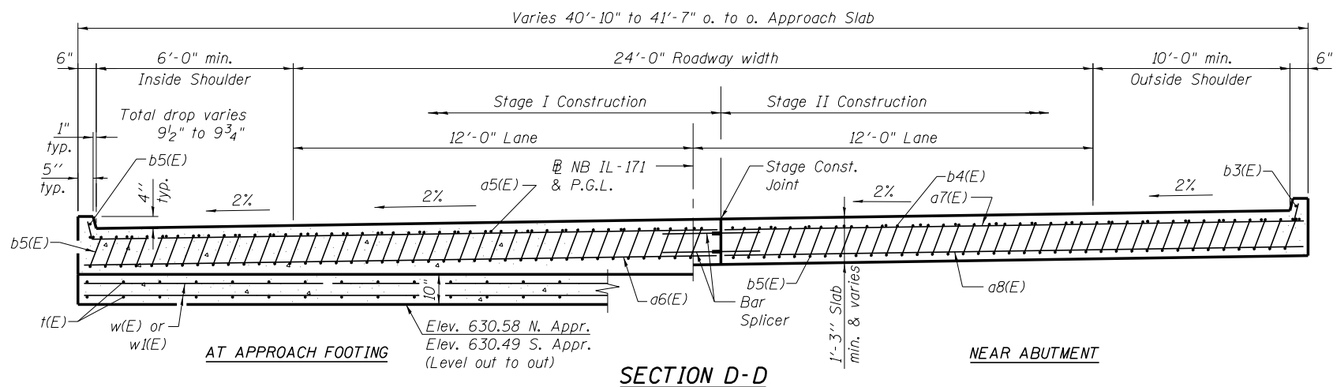

SECTION D-D

(See Plan for dimensions not shown)

NOTES:

1. See sheet SA23 for Detail A and View B-B.
2. Approach slab concrete shall be paid for as Concrete Superstructure.
3. Approach footing concrete shall be paid for as Concrete Structures.
4. Reinforcement shall be paid for as Reinforcement Bars, Epoxy Coated.
5. For v(E) bar details, see sheet SA17.
6. The approach footing maximum applied service bearing pressure (Qmax) = 2.0 ksf.
7. For bar splicer details, see sheet SA40.
8. Cost of excavation for approach footing included with Concrete Structures.
9. For Granular Backfill for Structures and drainage treatment details, see sheet SA2.

* Tilt #9 b5(E) bars as required to maintain clearance.

** Cost included with Concrete Superstructure.

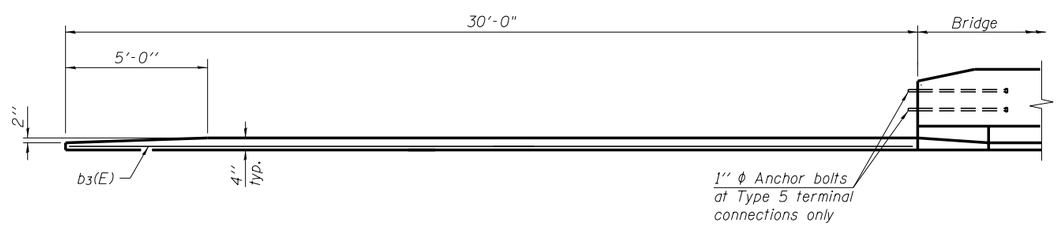

VIEW E-E

TWO APPROACHES BILL OF MATERIAL

Bar	No.	Size	Length	Shape
a5(E)	50	#4	20'-7"	
a6(E)	92	#5	20'-2"	
a7(E)	50	#4	20'-1"	
a8(E)	92	#5	19'-8"	
b3(E)	4	#4	29'-8"	
b4(E)	72	#4	29'-8"	
b5(E)	204	#9	29'-8"	
t(E)	176	#4	9'-8"	
w(E)	80	#5	20'-2"	
w1(E)	80	#5	19'-8"	
Concrete Superstructure			Cu. Yd.	116.7
Concrete Structures			Cu. Yd.	25.5
Reinforcement Bars, Epoxy Coated			Pound	31610
Bridge Deck Grooving			Sq. Yd.	270
Protective Coat			Sq. Yd.	352

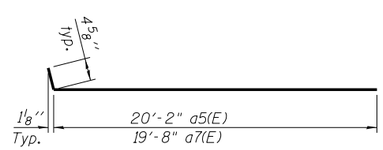

BAR a5(E) & a7(E)

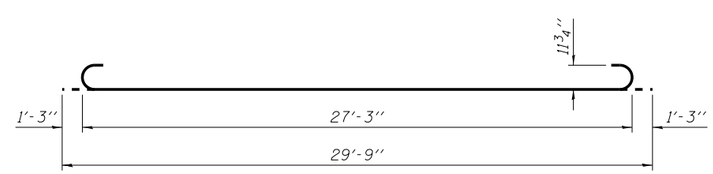

BAR b5(E)

benesch
engineers · scientists · planners
Alfred Benesch & Company
205 North Michigan Avenue, Suite 2400
Chicago, Illinois 60601
312-565-0450 Job No. 10093

FILE NAME = 0161000.60J16.024.appslabdet-2.NB.dgn	USER NAME = tjanicke	DESIGNED - JOB	REVISED -
		CHECKED - RMM	REVISED -
	PLOT SCALE =	DRAWN - MAK	REVISED -
	PLOT DATE = 12/20/2012	CHECKED - RMM	REVISED -

STATE OF ILLINOIS
DEPARTMENT OF TRANSPORTATION

BRIDGE APPROACH SLAB DETAILS (2 OF 2)
STRUCTURE NO. 016-1000/1001

SHEET NO. SA24 OF SA40 SHEETS

F.A.P. RTE.	SECTION	COUNTY	TOTAL SHEETS	SHEET NO.
372	2013-038B-R	COOK	821	272
		CONTRACT NO. 60J16		
		ILLINOIS FED. AID PROJECT		

X:\100000S\10093\Eng_Docs_Phase_II\SN_016_1000_1001_1st_Ave_over_47th_St\Final\0161000_60J16_024_appslabdet-2_NB.dgn 2:28:13 PM 6/23/2014