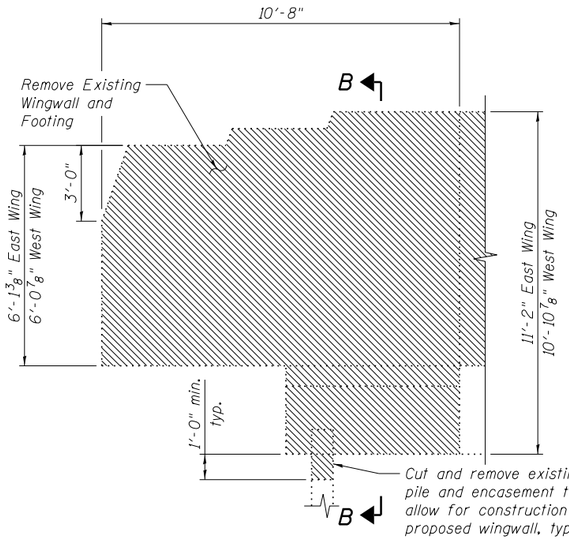

TYPICAL WINGWALL ELEVATION

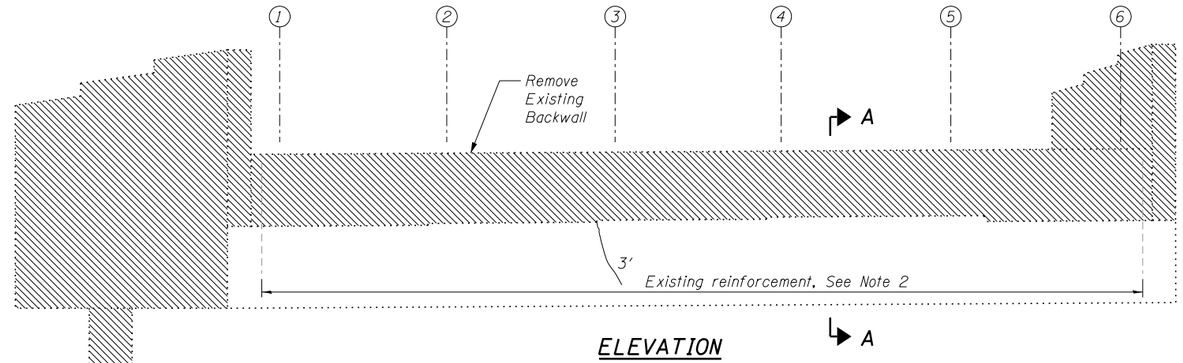

ELEVATION

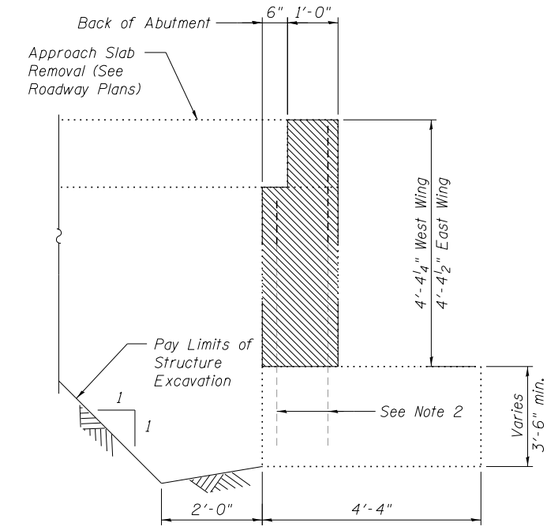

SECTION A-A

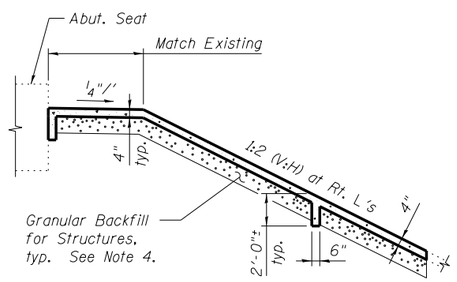

SECTION THRU SLOPEWALL REPAIR LOCATIONS

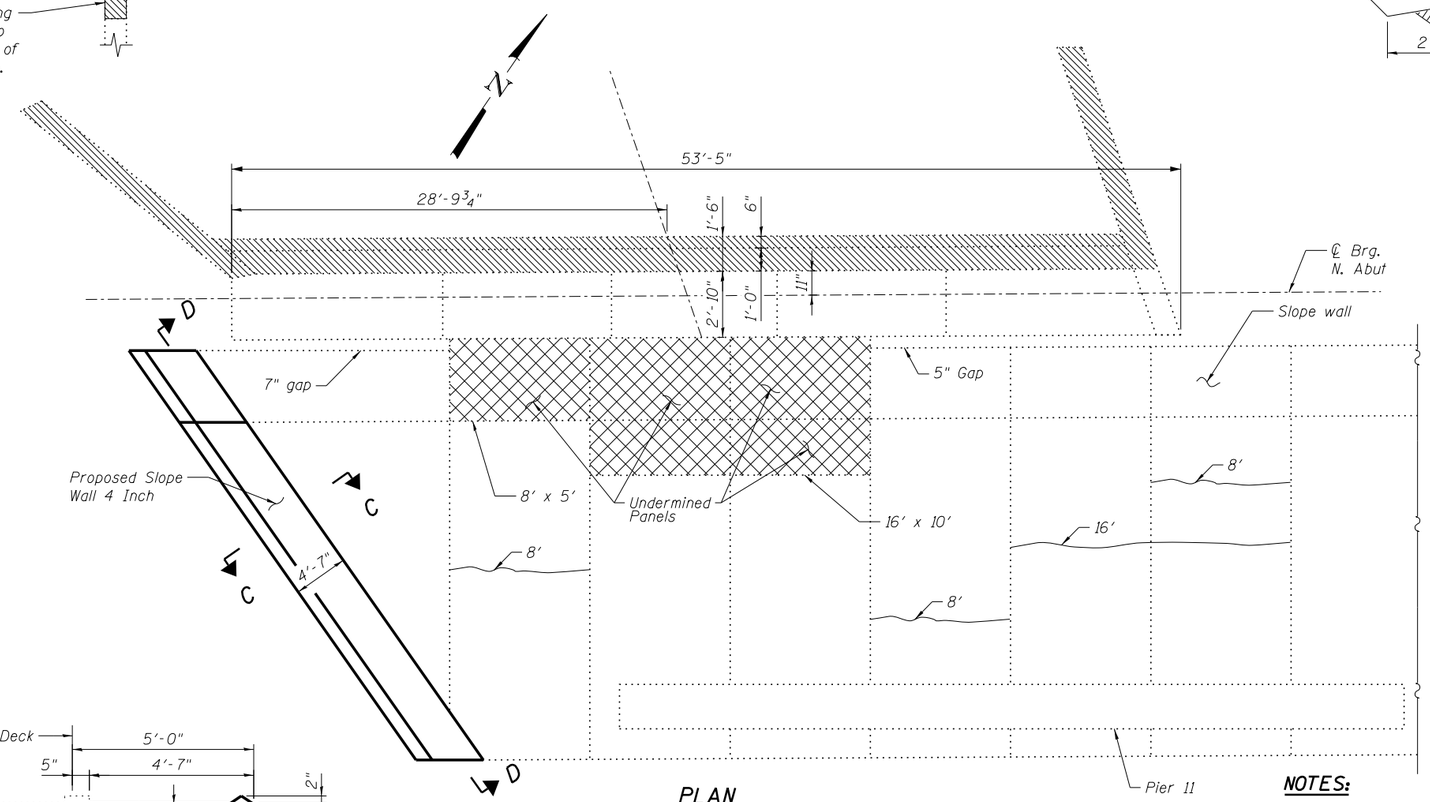

PLAN

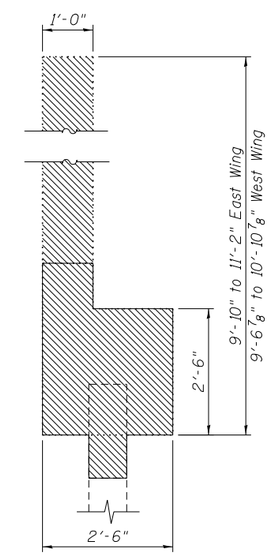

SECTION B-B

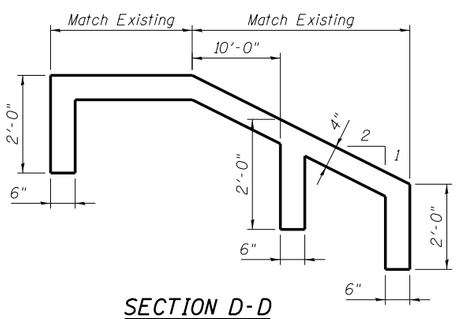

SECTION D-D

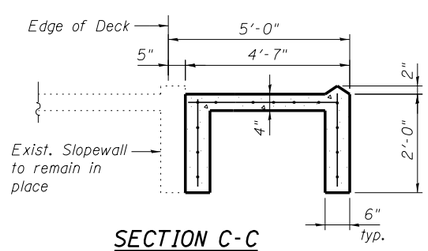

SECTION C-C

LEGEND

- Concrete Removal
- Slope Wall Removal & Slope Wall 6 Inch
- 4' Epoxy Crack Injection

BILL OF MATERIAL

ITEM	UNIT	TOTAL
Granular Backfill for Structures	Cu. Yd.	4
Concrete Removal	Cu. Yd.	20.3
Slope Wall Removal	Sq. Yd.	23
Slope Wall 4 Inch	Sq. Yd.	49
Epoxy Crack Injection	Foot	43

NOTES:

1. Actual quantities of repairs shall be approved by the Engineer.
2. Existing reinforcement shall be cleaned and incorporated into the new construction. Any reinforcement bars that are damaged during concrete removal operations shall be repaired or replaced using an approved bar splicer or anchorage system. Cost included with Concrete Removal.
3. Slopewall shall be reinforced with welded wire fabric, 6 in. X 6 in. W4.0 x W4.0, weighing 58 lbs per 100 sq ft.
4. Embankment required for for the slopewall widening shall be paid for as "Furnished Excavation".
5. Crack widths are 1/8" ± 1/16" unless otherwise noted.

benesch
engineers · scientists · planners
Alfred Benesch & Company
205 North Michigan Avenue, Suite 2400
Chicago, Illinois 60601
312-565-0450 Job No. 10093

FILE NAME =	USER NAME = jsurber	DESIGNED - JOB	REVISED -
		CHECKED - AWH	REVISED -
0160486.60J16.067_Nabutrepair.dgn	PLOT SCALE =	DRAWN - FSM	REVISED -
	PLOT DATE = 8/6/2014	CHECKED - AWH	REVISED -

STATE OF ILLINOIS
DEPARTMENT OF TRANSPORTATION

NORTH ABUTMENT CONCRETE REMOVAL AND REPAIR DETAILS
STRUCTURE NO. 016-0486

SHEET NO. SG67 OF SG100 SHEETS

F.A.P. RTE.	SECTION	COUNTY	TOTAL SHEETS	SHEET NO.
373	2013-038B-R	COOK	821	657
		CONTRACT NO. 60J16		
		ILLINOIS FED. AID PROJECT		

Y:\chicago\10000S\10093\Eng_Docs_Phase_II\SN_016_0486_0487_1st_Ave_over_Canal\Final\0486\0160486.60J16_067_Nabutrepair.dgn 7:30:55 PM 8/6/2014