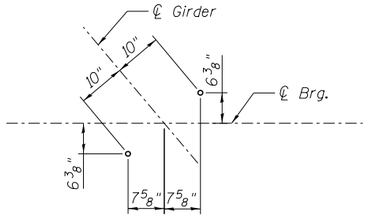

ANCHOR BOLT LAYOUT

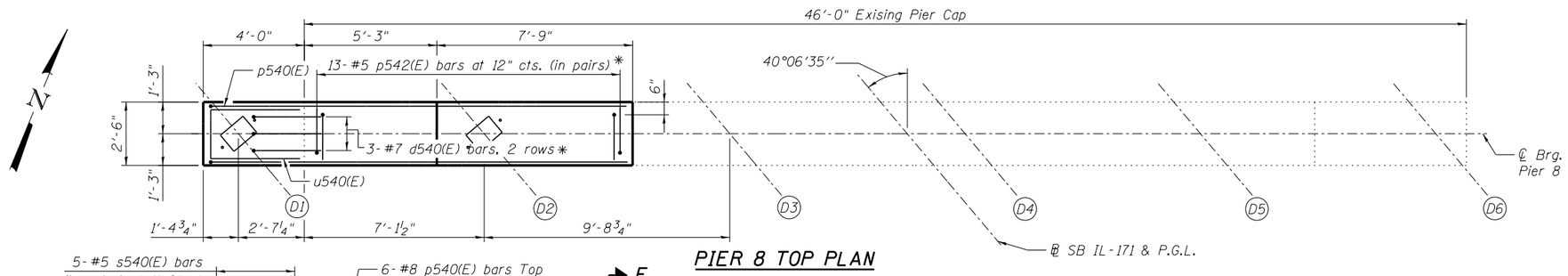

PIER 8 TOP PLAN

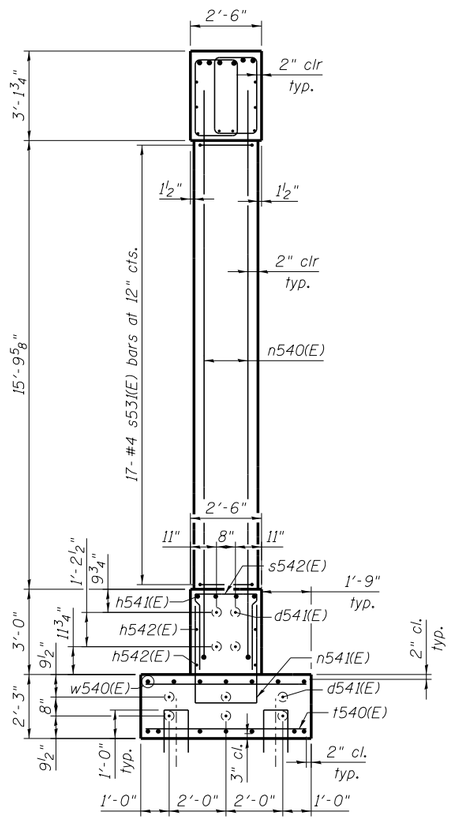

END VIEW

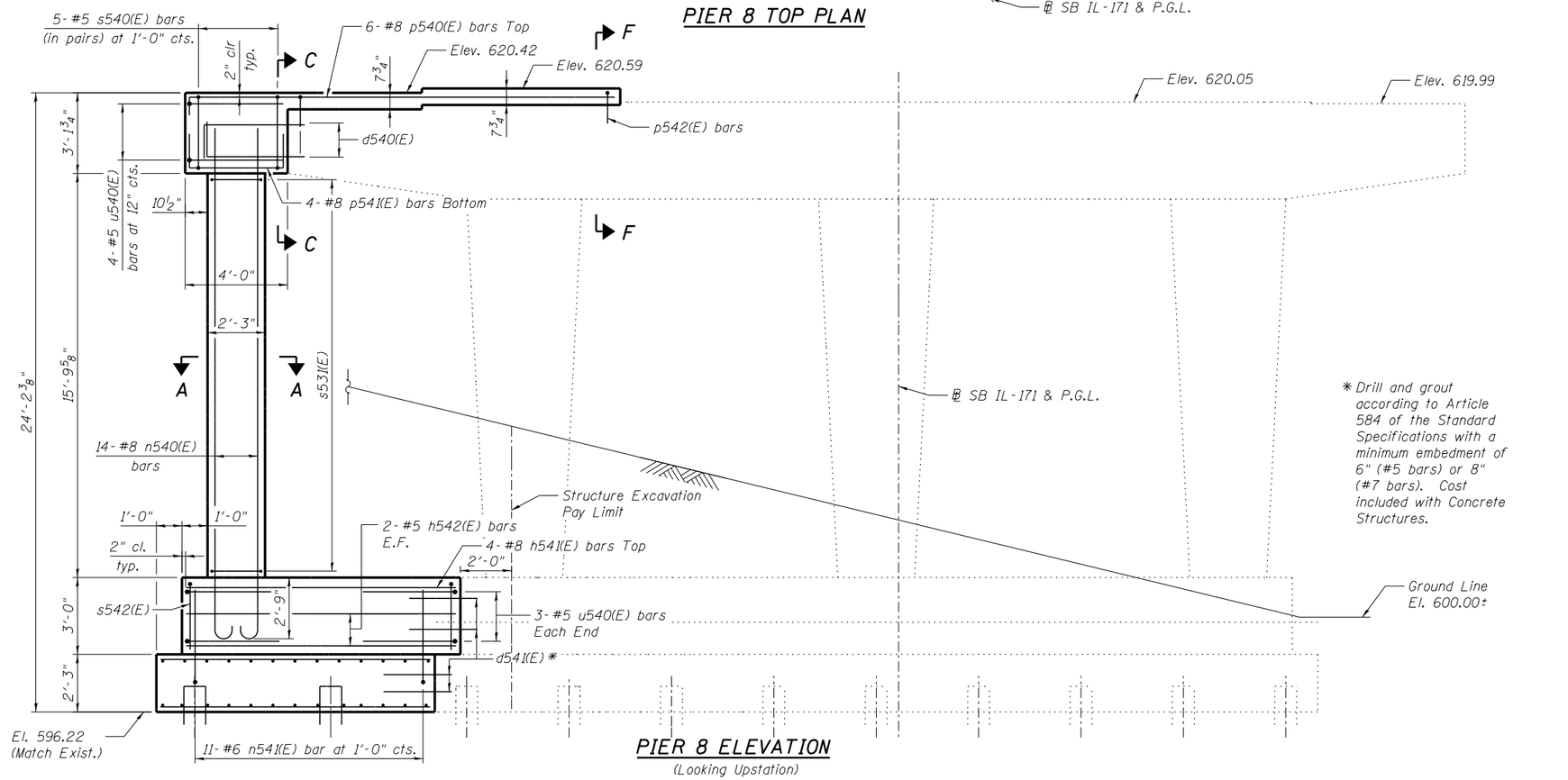

*Drill and grout according to Article 584 of the Standard Specifications with a minimum embedment of 6" (#5 bars) or 8" (#7 bars). Cost included with Concrete Structures.

PIER 8 ELEVATION

(Looking Upstation)

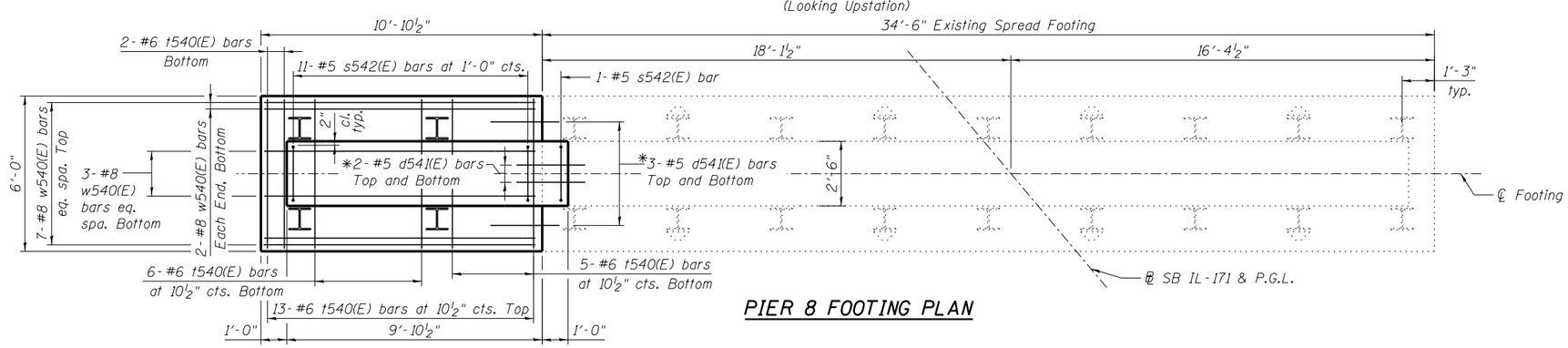

PIER 8 FOOTING PLAN

NOTES:

1. Pour steps monolithically with cap.
2. See Sheet SG87 for Section A-A, Section C-C, and Section F-F.
3. See Sheet SG6 for pile layout.
4. See Sheet SG88 for Bar Bends and Bill of Material.

PILE DATA

Type: HP12x53 with Pile Shoes
Nominal Required Bearing: 293 kips
Allowable Resistance Available: 98 kips
Est. Length: 40 ft
No. Production Piles: 3
No. Test Piles: 1

benesch
engineers · scientists · planners
Alfred Benesch & Company
205 North Michigan Avenue, Suite 2400
Chicago, Illinois 60601
312-565-0450
Job No. 10093

FILE NAME = 0160486_60J16_085_Pier_8_Widening_Details.dgn	USER NAME = jsurber	DESIGNED - AWH	REVISED -
		CHECKED - AJK	REVISED -
	PLOT SCALE =	DRAWN - KMS	REVISED -
	PLOT DATE = 8/6/2014	CHECKED - AJK	REVISED -

STATE OF ILLINOIS
DEPARTMENT OF TRANSPORTATION

PIER 8 WIDENING DETAILS
STRUCTURE NO. 016-0486

SHEET NO. SG85 OF SG100 SHEETS

F.A.P. RTE.	SECTION	COUNTY	TOTAL SHEETS	SHEET NO.
373	2013-038B-R	COOK	821	675
		CONTRACT NO. 60J16		
	ILLINOIS FED. AID PROJECT			

Y:\chicago\100005\10093\Eng_Docs_Phase_II\SN_016_0486_0487_1st_Ave_over_Canal\Final\0486\0160486_60J16_085_Pier_8_Widening_Details.dgn
7:31:22 PM
8/6/2014