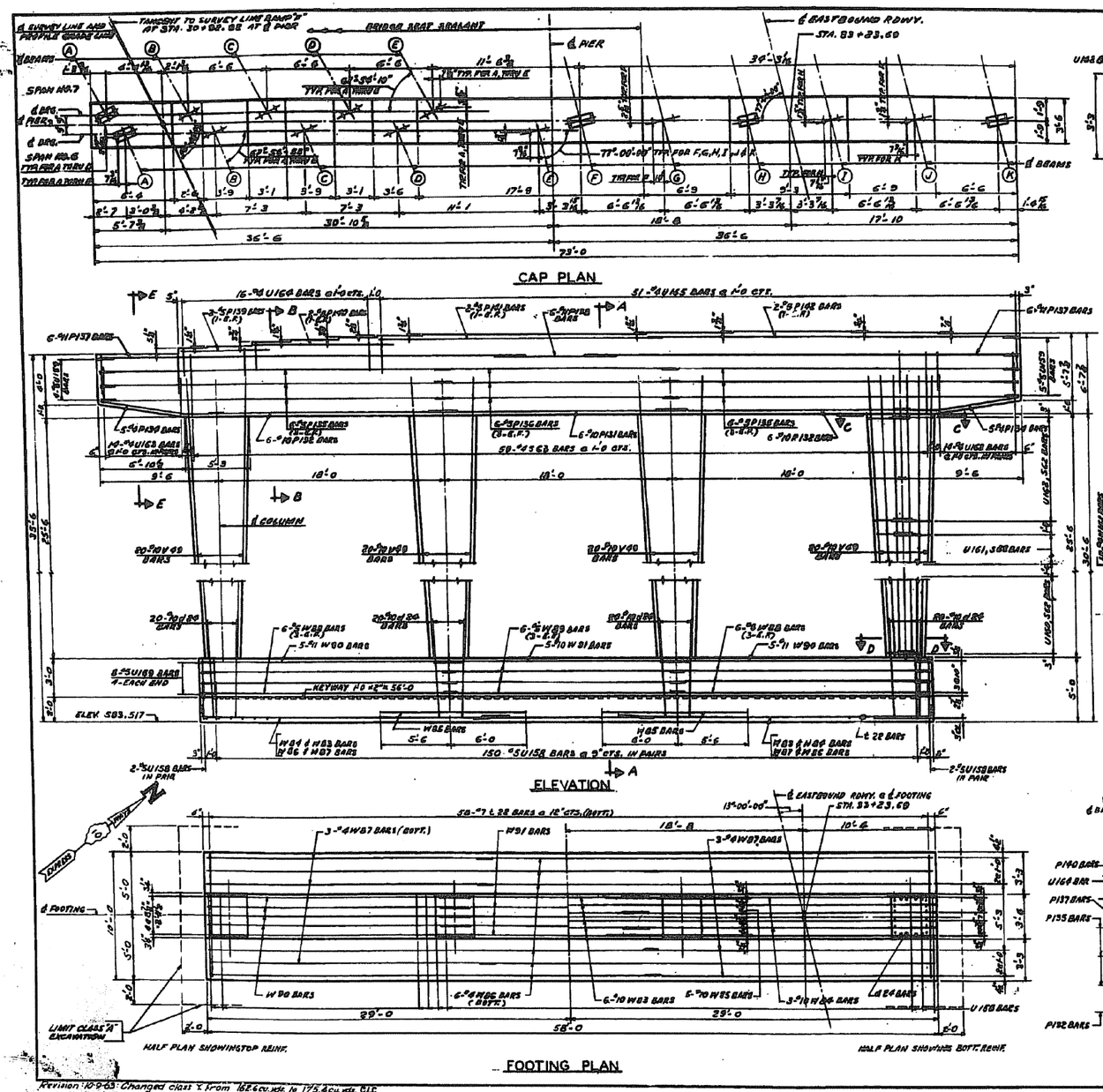

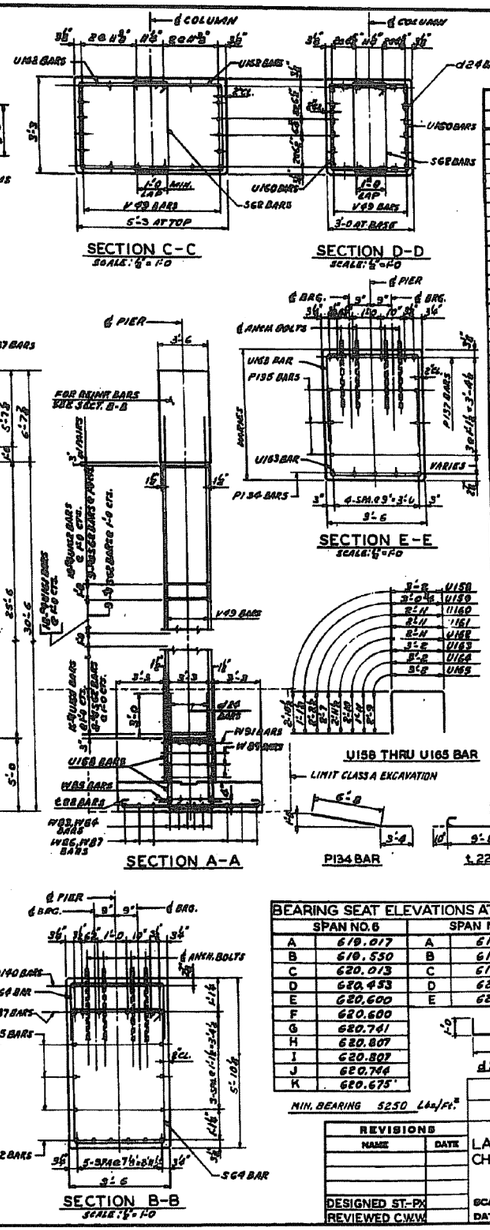

F.A.P. RTE.	SECTION	EXPRESSWAYS	TOTAL SHEETS	SHEET NO.
133	0707-626B	SOUTHWEST	95	48
STA.		TO STA.		
FED. ROAD DIST. NO. 7	ILLINOIS	FED. AID PROJECT		

BILL OF REINFORCEMENT

BAR	NO.	SIZE	LENGTH	SHAPE
d24	80	10	8'-6	L
P131	6	10	20'-2	
P132	18	10	19'-7	
P134	10	4	10'-0	
P135	12	5	27'-11	
P136	6	5	19'-2	
P137	12	11	34'-0	
P138	6	11	9'-8	
P139	2	5	7'-4	
P140	2	5	11'-0	
P141	2	5	22'-3	
P142	2	5	20'-0	
S62	108	4	8'-10	
S63	50	4	16'-5	
L22	58	7	11'-4	
U158	154	5	8'-11	
U159	17	5	5'-3	
U160	66	4	7'-4	
U161	72	4	8'-1	
U162	72	4	8'-10	
U163	28	4	8'-10	
U164	16	4	7'-0	
U165	51	4	8'-8	
V49	80	10	28'-6	
W83	6	10	36'-0	
W84	6	10	25'-2	
W85	10	10	11'-6	
W86	6	4	36'-0	
W87	6	4	25'-9	
W88	12	5	20'-6	
W89	6	5	19'-2	
W90	10	11	26'-11	
W91	6	10	20'-2	

PIER NO.6 E.B. - QUANTITIES

CLASS X CONCRETE	CU.YDS.	175.4
REINFORCEMENT BARS	LBS.	27,960
CLASS A EXCAVATION	CU.YDS.	273

BEARING SEAT ELEVATIONS AT BEAMS

SPAN NO.6		SPAN NO.7	
A	619.017	A	619.017
B	619.550	B	619.845
C	620.013	C	619.865
D	620.453	D	620.276
E	620.600	E	620.600
F	620.600		
G	620.741		
H	620.807		
I	620.807		
J	620.746		
K	620.675		

MIN. BEARING 5250 Lbs/Ft.²

REVISIONS	
NAME	DATE
DESIGNED ST-PX	
REVIEWED CWW	

ILLINOIS DIVISION OF HIGHWAYS
SOUTHWEST EXPRESSWAY
F.A. RT. 133
LAWNDALE AVE. STRUCTURE OVER
CHICAGO SANITARY AND SHIP CANAL
SECTION 0707-626 B
PIER NO.6 EASTBOUND
SCALE: HORIZ. 1/8" = 1'-0 VERT. EXCEPT AS NOTED
DATE
DRAWN BY E.M.
CHECKED BY L.D.B.

benesch
engineers · scientists · planners
Alfred Benesch & Company
205 North Michigan Avenue, Suite 2400
Chicago, Illinois 60601
312-565-0450 Job No. 10093

FOR INFORMATION ONLY

FILE NAME = 0160486_60J16_X11_exist_pier6.dgn	USER NAME = tjanicke	DESIGNED - FSM	REVISED -
		CHECKED - RMM	REVISED -
	PLOT SCALE =	DRAWN - FSM	REVISED -
	PLOT DATE = 6/23/2014	CHECKED - RMM	REVISED -

STATE OF ILLINOIS
DEPARTMENT OF TRANSPORTATION

EXISTING PLANS PIER 6
STRUCTURE NO. 016-0486
SHEET NO. SGX11 OF SGX48 SHEETS

F.A.P. RTE.	SECTION	COUNTY	TOTAL SHEETS	SHEET NO.
373	2013-038B-R	COOK	821	701
		CONTRACT NO. 60J16		
		ILLINOIS FED. AID PROJECT		

6/23/2014 2:54:40 PM X:\10000S\10093\Eng_Docs_Phase_II\SN_016_0486_0487_1st_Ave_over_Canal\Final_0486\0160486_60J16_X11_exist_pier6.dgn

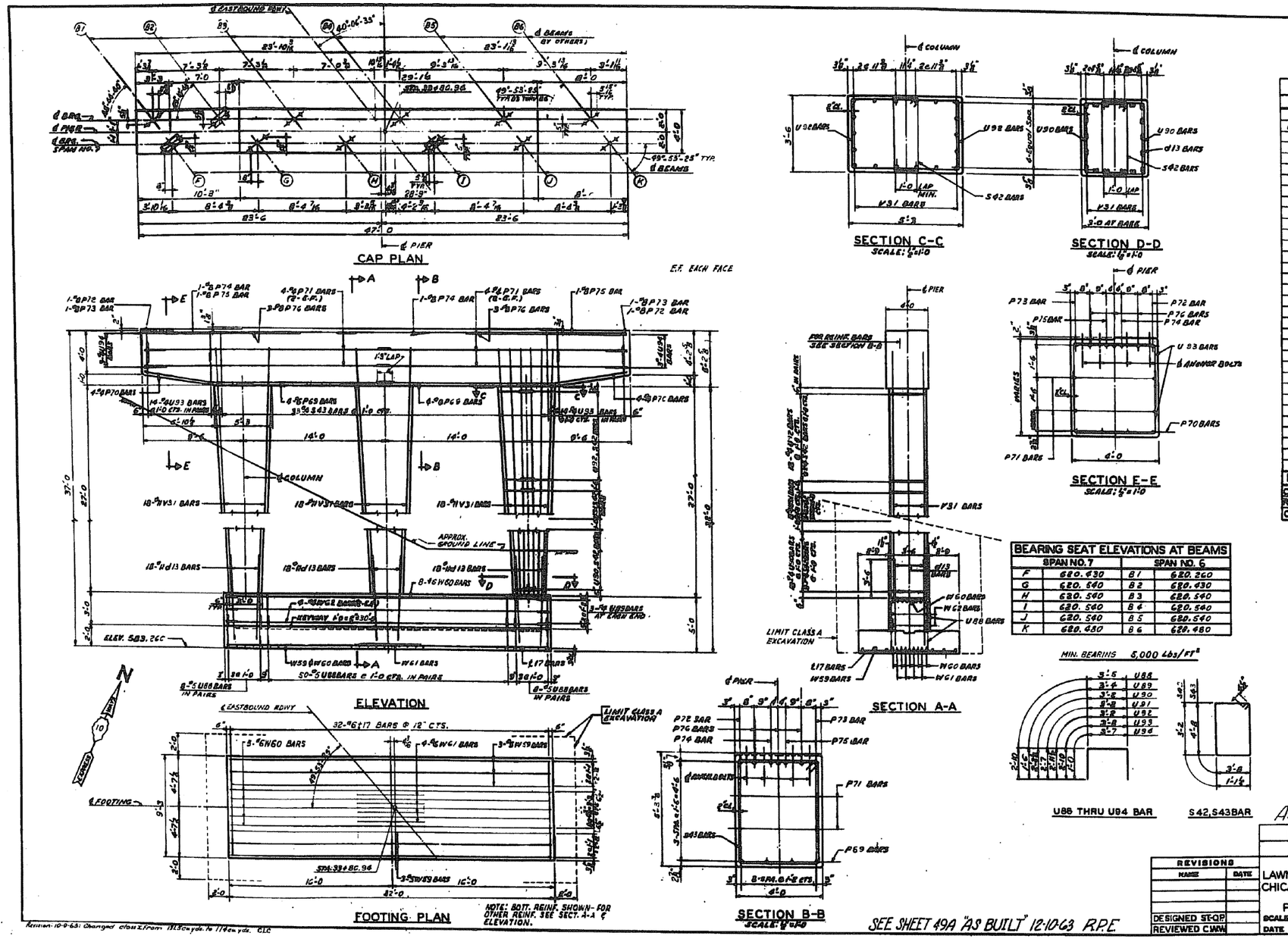

F.A. RTE.	SECTION	EXPRESSWAYS	TOTAL SHEETS	SHEET NO.
133	0707-626B	SOUTHWEST	95	49
STA.		TO STA.		
FED. ROAD DIST. NO. 7	ILLINOIS	FED. AID PROJECT		

BILL OF REINFORCEMENT

BAR	NO.	SIZE	LENGTH	SHAPE
d13	54	11	7'-9	
P69	8	6	15'-3	
P70	8	4	10'-0	
P71	8	4	23'-9	
P72	2	8	18'-5	
P73	2	8	29'-11	
P74	2	8	18'-5	
P75	2	8	29'-11	
P76	6	8	11'-0	
S42	81	4	9'-4	
S43	33	4	17'-5	
L17	32	6	8'-11	
U88	66	5	9'-1	
U89	6	4	5'-4	
U90	54	4	7'-7	
U91	54	4	8'-4	
U92	54	4	9'-1	
U93	28	4	9'-4	
U94	6	4	5'-7	
V31	54	11	30'-6	
W59	6	5	31'-8	
W60	13	6	31'-8	
W61	4	6	6'-0	
W62	4	4	31'-8	

PIER NO. 7 EASTBOUND

CLASS X CONCRETE	CU.YDS.	114
REINFORCING BARS	LBS.	16,160
CLASS A EXCAVATION	CU.YDS.	338

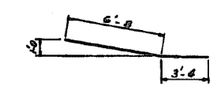

BEARING SEAT ELEVATIONS AT BEAMS

SPAN NO. 7		SPAN NO. 6	
F	620.430	B1	620.260
G	620.540	B2	620.430
H	620.540	B3	620.540
I	620.540	B4	620.540
J	620.540	B5	620.540
K	620.480	B6	620.480

AS AWARDED

ILLINOIS DIVISION OF HIGHWAYS
SOUTHWEST EXPRESSWAY
F.A. RT. 133
LAWNDALE AVE. STRUCTURE OVER CHICAGO SANITARY AND SHIP CANAL
SECTION 0707-626 B
PIER NO. 7 EASTBOUND
SCALE HORIZ. 1/4"=1'-0 VERT. EXCEPT AS NOTED
DATE 8-5-63
DRAWN BY E.M.
CHECKED BY L.D.B.

REVISIONS	
NAME	DATE
DESIGNED ST-QP	
REVIEWED CWW	

benesch
engineers · scientists · planners
Alfred Benesch & Company
205 North Michigan Avenue, Suite 2400
Chicago, Illinois 60601
312-565-0450 Job No. 10093

FOR INFORMATION ONLY

FILE NAME =	USER NAME = tjanicke	DESIGNED - FSM	REVISED -
		CHECKED - RMM	REVISED -
0160486_60J16_X12_exist_pier7.dgn	PLOT SCALE =	DRAWN - FSM	REVISED -
	PLOT DATE = 6/23/2014	CHECKED - RMM	REVISED -

STATE OF ILLINOIS
DEPARTMENT OF TRANSPORTATION

EXISTING PLANS PIER 7
STRUCTURE NO. 016-0486
SHEET NO. SGX12 OF SGX48 SHEETS

F.A.P. RTE.	SECTION	COUNTY	TOTAL SHEETS	SHEET NO.
373	2013-038B-R	COOK	821	702
		CONTRACT NO. 60J16		
		ILLINOIS FED. AID PROJECT		

6/23/2014 2:55:04 PM X:\10000S\10093\Eng_Docs_Phase_II\SN_016_0486_0487_1st_Ave_over_Canal\Final\Final_0486\0160486_60J16_X12_exist_pier7.dgn

FED. AID ROUTE NO.	SEC	COUNTY	TOTAL SHEETS	SHEET NO.
133	0707-60-HB	COOK	29	19
FED. ROAD DIST. NO. 7	ILLINOIS	FED. AID PROJECT		

SHEET NO. 13 SHEETS

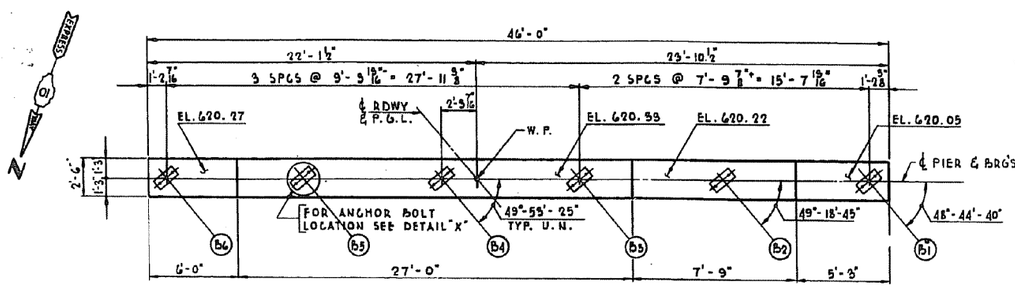

PLAN
(NO SCALE)

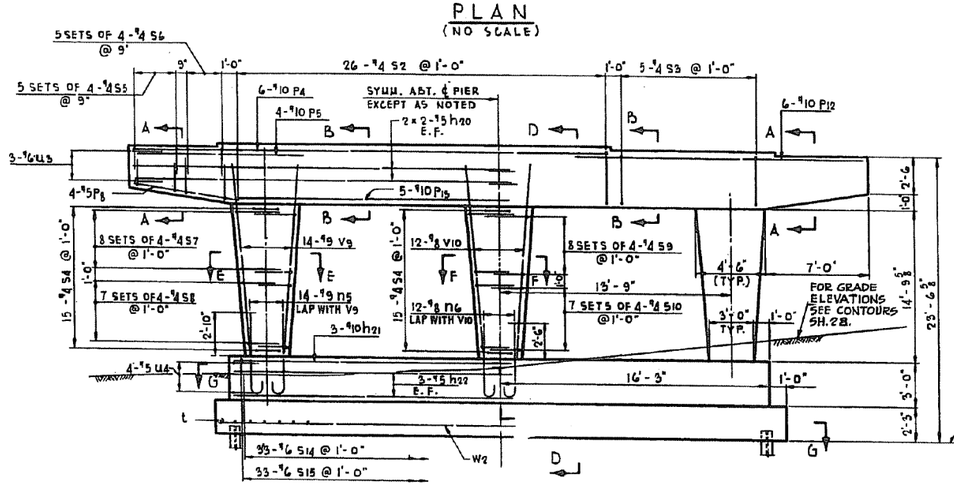

ELEVATION
(NO SCALE)

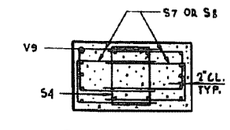

SECTION E-E
SCALE: ½"=1'-0"

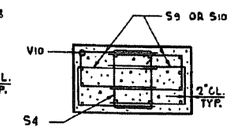

SECTION F-F
SCALE: ½"=1'-0"

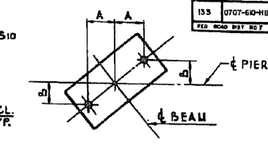

DETAIL "X"
FOR DIMENSIONS A & B SEE TABLE

BEAM	A	B
B1	5 19/16"	5 1/8"
B2	5 7/16"	5 1/16"
B3 THRU B6	5 19/16"	5"

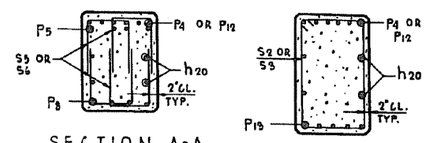

SECTION A-A
SCALE: ½"=1'-0"

SECTION B-B
SCALE: ½"=1'-0"

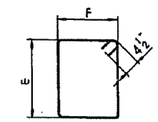

BAR	E	F
S2	3'-4"	2'-2"
S3	3'-2"	2'-2"
S4	1'-2"	1'-11"

BARS
S2, S3 & S4

NOTE:
FOR ANCHOR BOLT PROJECTION SEE SH. 25
SPACE REINFORCEMENT IN CAP TO MISS ANCHOR BOLTS.
ALL EDGES TO HAVE STD. ¾" CHAMFER EXCEPT AS NOTED.
POUR STEPS MONOLITHICALLY WITH PIER CAP.

KEY TO BAR INDICATION:
5×2-#10 ETC. MEANS 5 LINES OF BARS WITH 2 LENGTHS PER LINE.
MIN. BAR LAP = 20 DIA.

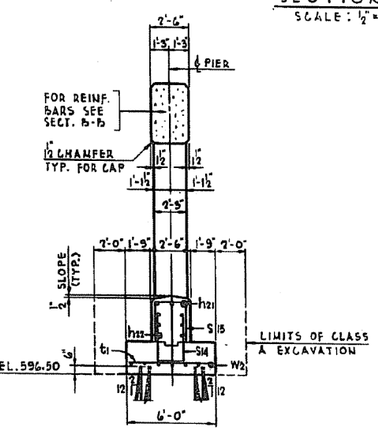

SECTION D-D
(NO SCALE)

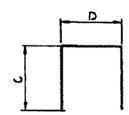

BAR	C	D
S5	2'-0"	1'-4"
S6	2'-3"	1'-4"
S7	2'-7"	1'-6"
S8	2'-4"	1'-6"
S9	2'-7"	1'-4"
S10	2'-4"	1'-4"
S14	3'-4"	2'-2"
S15	2'-10"	2'-2"
U3	2'-0"	2'-1"
U4	1'-6"	2'-1"

BARS
S5 THRU S10, S14, S15
U3 & U4

BEAM	A	B
B1	5 19/16"	5 1/8"
B2	5 7/16"	5 1/16"
B3 THRU B6	5 19/16"	5"

BAR LIST				
BAR	NO.	SIZE	LENGTH	SHAPE
h20	8	5	23'-6"	—
h21	3	10	32'-2"	—
h22	6	5	32'-2"	—
n5	28	9	6'-11"	U
n6	12	8	6'-5"	U
P4	6	10	32'-9"	—
P5	8	10	11'-6"	—
P8	8	5	7'-3"	—
P12	6	10	15'-6"	—
P15	5	10	32'-0"	—
S2	26	4	11'-9"	⊐
S3	5	4	11'-5"	⊐
S4	45	4	6'-11"	⊐
S5	40	4	5'-4"	⊓
S6	40	4	5'-10"	⊓
S7	64	4	6'-8"	⊓
S8	56	4	6'-2"	⊓
S9	32	4	6'-6"	⊓
S10	28	4	6'-0"	⊓
S14	33	6	8'-10"	⊓
S15	33	6	7'-10"	⊓
t1	35	6	5'-6"	—
U3	6	6	6'-1"	⊓
U4	8	5	5'-1"	⊓
V9	28	9	17'-6"	—
V10	12	8	17'-3"	—
W2	7	8	34'-2"	—

ALL BAR DIMENSIONS ARE OUT TO OUT.
PREFIX ALL BAR MARKS FOR SHIPMENT WITH A NUMBER INDICATING THE PIER WHERE THE BARS WILL BE USED.
EXAMPLE: 8P12 MEANS BARS P12 FOR PIER 8

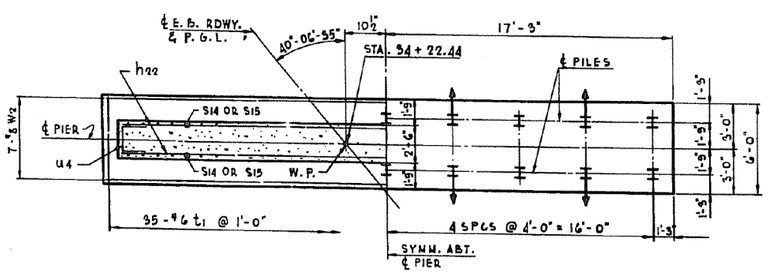

SECTION G-G
(NO SCALE)

PILE DATA	
PILE TYPE	8BP36
MIN. CAPACITY TONS	90
NO. REQUIRED	18*
EST. LENGTH FEET	21
CUT OFF ELEV.	597.00

*INCLUDES 1 TEST PILE

= DENOTES BATTER PILE

BILL OF MATERIAL		
ITEM	UNIT	QUANTITY
CLASS A EXCAVATION	CU YD	84
CLASS X CONCRETE	CU YD	55.2
REINFORCEMENT BARS	POUND	9659
FURNISHING STEEL PILES 8BP36	LIN FT	357
TEST PILE STEEL 8BP36	EACH	1
DRIVING STEEL PILES	LIN FT	357

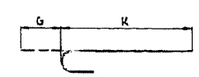

BAR	G	K
n5	1'-9"	5'-8"
n6	1'-1"	5'-4"

BARS n5 & n6

DE LEUW, CATHER & CO. ENGINEERS
DESIGNED BY Y. N. HUO
DRAWN BY E. BOBINAS
CHECKED E. Bobinas
IN CHARGE E. S. MARTINS
APPROVED L. N. RIAN

JOB NO. 1179

ILLINOIS DIVISION OF HIGHWAYS
SOUTHWEST EXPRESSWAY
LAWNDALE AVE. OVER RAMP E
PIER 8

SCALE: AS NOTED | DATE

benesch
engineers · scientists · planners
Alfred Benesch & Company
205 North Michigan Avenue, Suite 2400
Chicago, Illinois 60601
312-565-0450 Job No. 10093

FOR INFORMATION ONLY

FILE NAME =	USER NAME = tjanicke	DESIGNED - FSM	REVISED -	STATE OF ILLINOIS DEPARTMENT OF TRANSPORTATION	EXISTING PLANS PIER 8 STRUCTURE NO. 016-0486
		CHECKED - RMM	REVISED -		
0160486_60J16_X13_exist_pier8.dgn	PLOT SCALE =	DRAWN - FSM	REVISED -		
	PLOT DATE = 6/23/2014	CHECKED - RMM	REVISED -		SHEET NO. SGX13 OF SGX48 SHEETS

F.A.P. RTE.	SECTION	COUNTY	TOTAL SHEETS	SHEET NO.
373	2013-038B-R	COOK	821	703
		CONTRACT NO. 60J16		
		ILLINOIS FED. AID PROJECT		

X:\100005\10093\Eng_Docs_Phase_II\SN_016_0486_0487_1st_Ave_over_Canal\Final_0486\0160486_60J16_X13_exist_pier8.dgn 6/23/2014 2:55:27 PM

FED. AID PROJECT NO.	SEC.	COUNTY	TOTAL SHEETS	SHEET NO.
133	0707-610-HB	COOK	29	14
FED. ROAD DIST. NO. 7	ILLINOIS	FED. AID PROJECT		

SHEET NO. 14 SHEETS

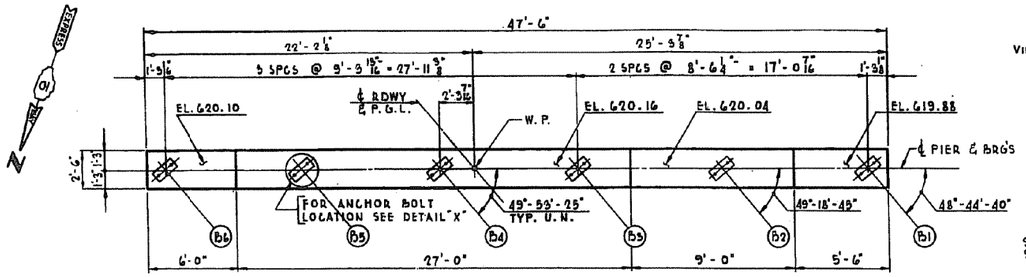

PLAN
(NO SCALE)

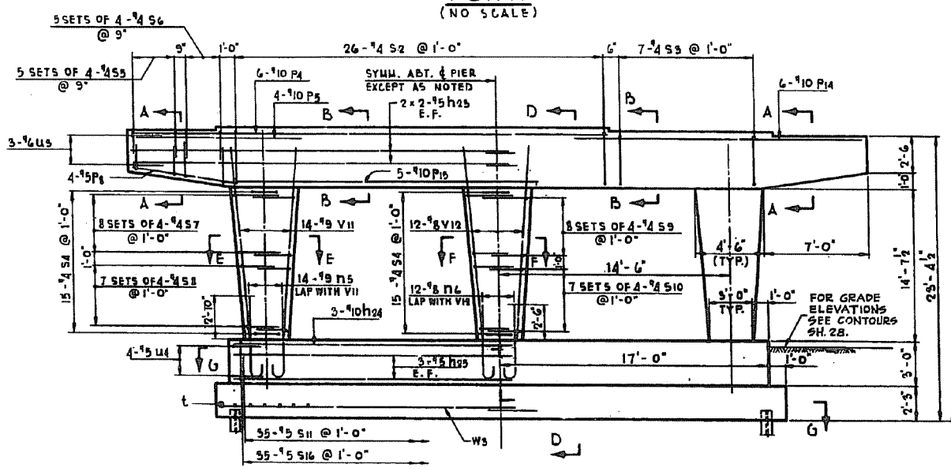

ELEVATION
(NO SCALE)

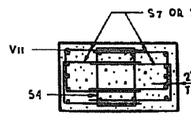

SECTION E-E
SCALE: 1/2" = 1'-0"

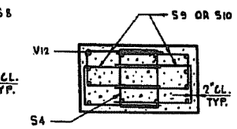

SECTION F-F
SCALE: 1/2" = 1'-0"

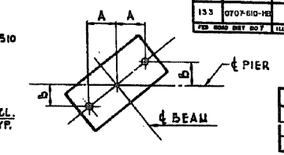

DETAIL "X"
FOR DIMENSIONS A & B SEE TABLE

BEAM	A	B
B1	3 7/16"	4 3/4"
B2	3 5/8"	4 3/4"
B3 THRU B6	3 5/16"	4 11/16"

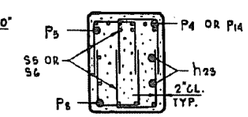

SECTION A-A
SCALE: 1/2" = 1'-0"

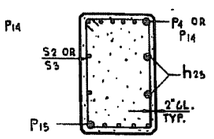

SECTION B-B
SCALE: 1/2" = 1'-0"

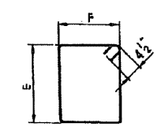

BAR	E	F
S2	3'-4"	2'-2"
S3	3'-2"	2'-2"
S4	1'-2"	1'-11"

BARS
S2, S3 & S4

NOTE:
FOR ANCHOR BOLT PROJECTION SEE SH. 25
SPACE REINFORCEMENT IN CAP TO MISS ANCHOR BOLTS.
ALL EDGES TO HAVE STD. 3/4" CHAMFER EXCEPT AS NOTED.
POUR STEPS MONOLITHICALLY WITH PIER CAP.

KEY TO BAR INDICATION:
3x2-#5 ETC. MEANS 3 LINES OF BARS WITH 2 LENGTHS PER LINE.
MIN. BAR LAP = 20 DIA.

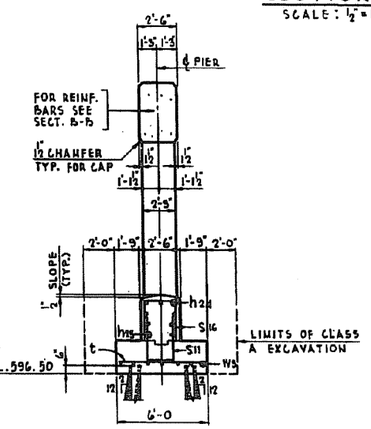

SECTION D-D
(NO SCALE)

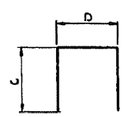

BAR	C	D
S5	2'-0"	1'-4"
S6	2'-5	1'-4"
S7	2'-7	1'-6"
S8	2'-4"	1'-6"
S9	2'-7"	1'-4"
S10	2'-4"	1'-4"
S11	3'-0"	2'-2"
S16	2'-10"	2'-2"
U3	2'-0"	2'-1"
U4	1'-6"	2'-1"

BARS
S5 THRU S11, S16
U3 & U4

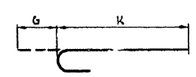

BAR	G	K
n5	1'-3"	5'-8"
n6	1'-1"	5'-4"

BARS n5 & n6

BAR LIST				
BAR	NO.	SIZE	LENGTH	SHAPE
h25	8	5	24'-6"	—
h24	9	10	33'-9"	—
h23	6	5	33'-9"	—
n5	28	9	6'-11"	⊂
n6	12	8	6'-5"	⊂
P4	6	10	32'-9"	—
P5	8	10	11'-6"	—
P8	8	5	7'-9"	—
P14	6	10	17'-0"	—
P15	5	10	33'-6"	—
S2	26	4	11'-9"	⊐
S3	7	4	11'-5"	⊐
S4	45	4	6'-11"	⊐
S5	40	4	5'-4"	⊓
S6	40	4	5'-10"	⊓
S7	64	4	6'-8"	⊓
S8	56	4	6'-2"	⊓
S9	32	4	6'-6"	⊓
S10	28	4	6'-0"	⊓
S11	55	5	8'-2"	⊐
S16	55	5	7'-10"	⊓
t	37	5	5'-6"	—
U3	6	6	6'-1"	⊓
U4	8	5	5'-1"	⊓
V11	28	9	17'-3"	—
V12	12	8	17'-0"	—
W5	14	8	18'-9"	—

ALL BAR DIMENSIONS ARE OUT TO OUT.
PREFIX ALL BAR MARKS FOR SHIPMENT WITH A NUMBER INDICATING THE PIER WHERE THE BARS WILL BE USED.
EXAMPLE: 9P4 MEANS BARS P4 FOR PIER 9

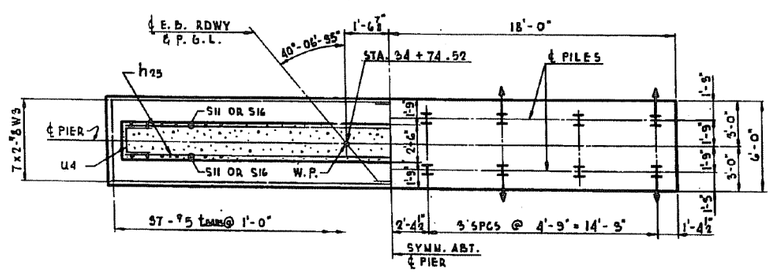

SECTION G-G
(NO SCALE)

PILE DATA	
PILE TYPE	8 BP 36
MIN. CAPACITY TONS	23
NO. REQUIRED	16
EST. LENGTH FEET	20
CUT OFF ELEV.	597.00

BILL OF MATERIAL		
ITEM	UNIT	QUANTITY
CLASS A EXCAVATION	CU YD	72
CLASS X CONCRETE	CU YD	56.8
REINFORCEMENT BARS	POUND	9489
FURNISHING STEEL PILES 8BP36	LIN FT	320
DRIVING STEEL PILES	LIN FT	320

I = DENOTES BATTER PILE

DE LEUW, CATHER & CO. ENGINEERS
DESIGNED BY Y.N. HUO
DRAWN BY E. BOBINAS
CHECKED E. Dunnigan
IN CHARGE E.S. MARTINS
APPROVED L.N. RIAN

JOB NO. 1179

ILLINOIS DIVISION OF HIGHWAYS
SOUTHWEST EXPRESSWAY
LAWNDALE AVE. OVER RAMP E
PIER 9
SCALE: AS NOTED | DATE

benesch
engineers · scientists · planners
Alfred Benesch & Company
205 North Michigan Avenue, Suite 2400
Chicago, Illinois 60601
312-565-0450 Job No. 10093

FOR INFORMATION ONLY

FILE NAME = 0160486_60J16_X14_exist_pier9.dgn	USER NAME = tjanicke	DESIGNED - FSM	REVISED -	STATE OF ILLINOIS DEPARTMENT OF TRANSPORTATION	EXISTING PLANS PIER 9 STRUCTURE NO. 016-0486	F.A.P. RTE. 373	SECTION 2013-038B-R	COUNTY COOK	TOTAL SHEETS 821	SHEET NO. 704
		CHECKED - RMM	REVISED -					CONTRACT NO. 60J16		
	PLOT SCALE =	DRAWN - FSM	REVISED -		SHEET NO. SGX14 OF SGX48 SHEETS			ILLINOIS FED. AID PROJECT		
	PLOT DATE = 6/23/2014	CHECKED - RMM	REVISED -							

X:\10000S\10093\Eng_Docs_Phase_II\SN_016_0486_0487_1st_Ave_over_Canal\Final_0486\0160486_60J16_X14_exist_pier9.dgn 6/23/2014 2:55:49 PM

FED. RD. DIST. NO.	SEC	COUNTY	TOTAL SHEETS	SHEET NO.
133	0707-60-HB	COOK	29	15
FED. ROAD DIST. NO. 7	ILLINOIS	FED. AID PROJECT		

SHEET NO. 15
SHEETS

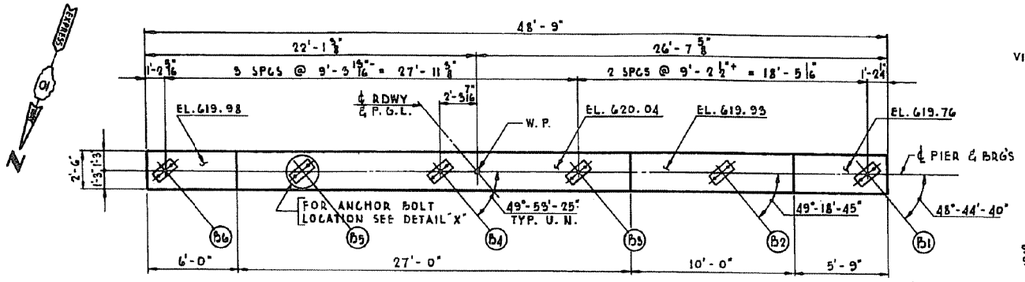

PLAN
(NO SCALE)

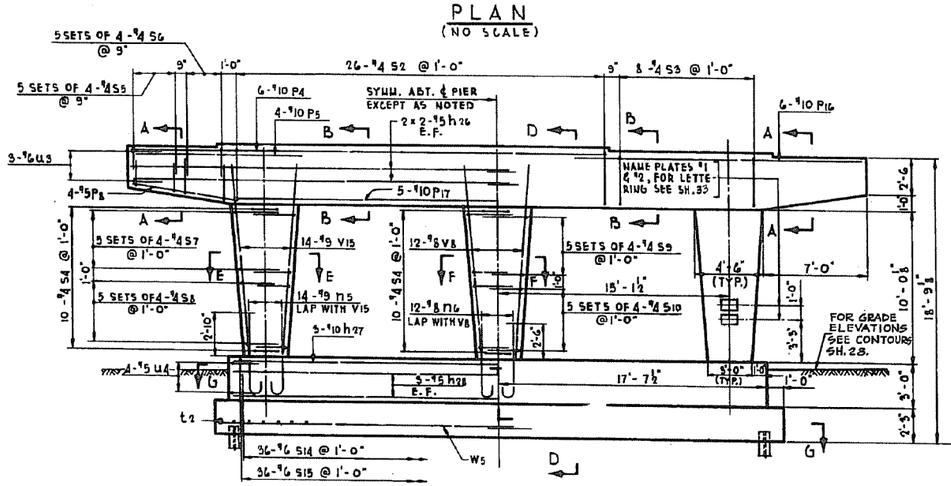

ELEVATION
(NO SCALE)

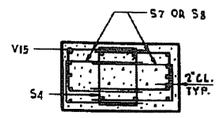

SECTION E-E
SCALE: 1/2" = 1'-0"

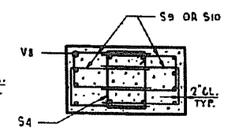

SECTION F-F
SCALE: 1/2" = 1'-0"

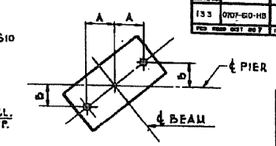

DETAIL "X"
FOR DIMENSIONS A & B SEE TABLE

BEAM	A	B
B1	5 7/16"	4 3/4"
B2	5 1/2"	4 3/4"
B3 THRU B6	5 7/16"	4 11/16"

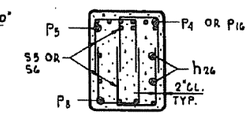

SECTION A-A
SCALE: 1/2" = 1'-0"

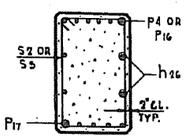

SECTION B-B
SCALE: 1/2" = 1'-0"

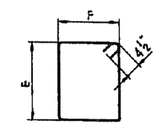

BAR	E	F
S2	3'-4"	2'-2"
S3	3'-2"	2'-2"
S4	1'-2"	1'-11"

BARS
S2, S3 & S4

NOTE:
FOR ANCHOR BOLT PROJECTION SEE SH. 25.
SPACE REINFORCEMENT IN CAP TO MISS ANCHOR BOLTS.
ALL EDGES TO HAVE STD. 3/4" CHAMFER EXCEPT AS NOTED.
POUR STEPS MONOLITHICALLY WITH PIER CAP.

KEY TO BAR INDICATION:
2x2-#5 ETC. MEANS 2 LINES OF BARS WITH 2 LENGTHS PER LINE.
MIN. BAR LAP = 20 DIA.

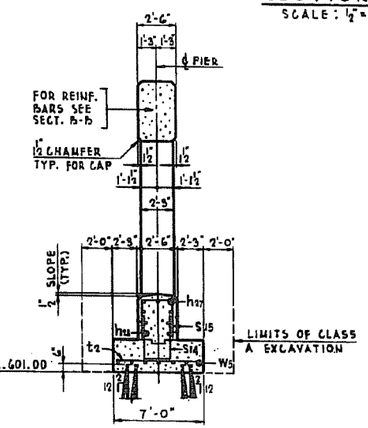

SECTION D-D
(NO SCALE)

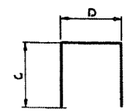

BAR	G	D
S5	2'-0"	1'-4"
S6	2'-9"	1'-4"
S7	2'-7"	1'-6"
S8	2'-4"	1'-6"
S9	2'-7"	1'-4"
S10	2'-4"	1'-4"
S14	3'-4"	2'-2"
S15	2'-10"	2'-2"
U3	2'-0"	2'-1"
U4	1'-6"	2'-1"

BARS
S5 THRU S10, S14, S15, U3 & U4

BAR	NO.	SIZE	LENGTH	SHAPE
h26	8	9	25'-0"	—
h27	5	10	54'-11"	—
h28	6	5	54'-11"	—
n5	28	9	6'-11"	⊂
n6	12	8	6'-5"	⊂
P4	6	10	52'-9"	—
P5	8	10	11'-6"	—
P8	8	5	7'-9"	—
P16	6	10	18'-9"	—
P17	5	10	54'-9"	—
S2	26	4	11'-9"	⊐
S3	8	4	11'-5"	⊐
S4	50	4	6'-11"	⊐
S5	40	4	5'-4"	⊓
S6	40	4	5'-10"	⊓
S7	40	4	6'-8"	⊓
S8	40	4	6'-7"	⊓
S9	20	4	6'-6"	⊓
S10	20	4	6'-0"	⊓
S14	36	6	8'-10"	⊓
S15	36	6	7'-10"	⊓
t2	38	6	6'-6"	—
U3	6	6	6'-1"	⊓
U4	8	5	5'-1"	⊓
V8	12	8	12'-5"	—
V15	28	9	12'-9"	—
W5	14	8	19'-6"	—

ALL BAR DIMENSIONS ARE OUT TO OUT.
PREFIX ALL BAR MARKS FOR SHIPMENT WITH A NUMBER INDICATING THE PIER WHERE THE BARS WILL BE USED.
EXAMPLE: 10 P8 MEANS BARS P8 FOR PIER 10

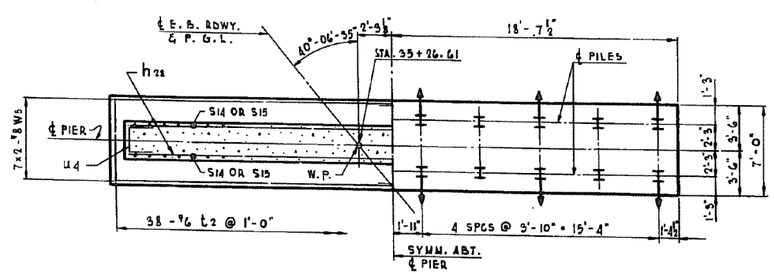

SECTION G-G
(NO SCALE)

PILE DATA	
PILE TYPE	8 BP 36
MIN. CAPACITY TONS	79
NO. REQUIRED	70*
EST. LENGTH FEET	74
CUT OFF ELEV.	601.50

*INCLUDES 1 TEST PILE

BILL OF MATERIAL		
ITEM	UNIT	QUANTITY
CLASS A EXCAVATION	CU YD	84
CLASS X CONCRETE	CU YD	57.0
REINFORCEMENT BARS	POUND	9180
FURNISHING STEEL PILES 8 BP 36	LIN FT	456
TEST PILE STEEL 8 BP 36	EACH	1
DRIVING STEEL PILES	LIN FT	456
NAME PLATE	EACH	2

= DENOTES BATTER PILE

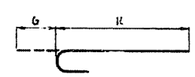

BAR	G	K
n5	1'-3"	5'-8"
n6	1'-1"	5'-4"

BARS n5 & n6

DE LEUW, CATHER & CO. ENGINEERS
DESIGNED BY Y.N. HUO
DRAWN BY F. ROBINAS
CHECKED
IN CHARGE E.S. MARTINS
APPROVED L.N. RIAN

JOB NO. 1179

ILLINOIS DIVISION OF HIGHWAYS
SOUTHWEST EXPRESSWAY
LAWNDALE AVE. OVER RAMP E
PIER 10

SCALE: AS NOTED | DATE

X:\100005\10093\Eng_Docs_Phase_II\SN_016_0486_0487_1st_Ave_over_Canal\Final_0486\0160486_60J16_X15_exist_pier10.dgn 2:56:12 PM 6/23/2014

benesch
engineers · scientists · planners
Alfred Benesch & Company
205 North Michigan Avenue, Suite 2400
Chicago, Illinois 60601
312-565-0450 Job No. 10093

FOR INFORMATION ONLY

FILE NAME =	USER NAME = tjanicke	DESIGNED - FSM	REVISED -
		CHECKED - RMM	REVISED -
0160486_60J16_X15_exist_pier10.dgn	PLOT SCALE =	DRAWN - FSM	REVISED -
	PLOT DATE = 6/23/2014	CHECKED - RMM	REVISED -

STATE OF ILLINOIS
DEPARTMENT OF TRANSPORTATION

EXISTING PLANS PIER 10
STRUCTURE NO. 016-0486
SHEET NO. SGX15 OF SGX48 SHEETS

F.A.P. RTE.	SECTION	COUNTY	TOTAL SHEETS	SHEET NO.
373	2013-038B-R	COOK	821	705
		CONTRACT NO. 60J16		
		ILLINOIS FED. AID PROJECT		

FED. ROAD DIST. NO.	SEC.	COUNTY	TOTAL SHEETS	SHEET NO.
133	0707-610-16	COOK	29	16
FED. ROAD DIST. NO. 7	ILLINOIS	FED. AID PROJECT		

SHEET NO. 16
SHEETS

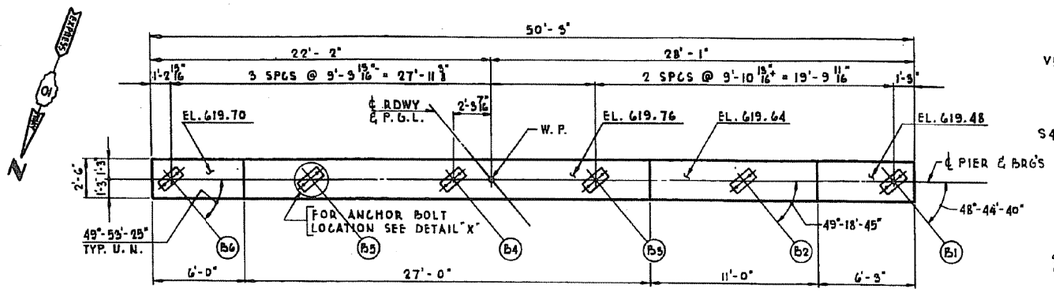

PLAN
SCALE: 1/4" = 1'-0"

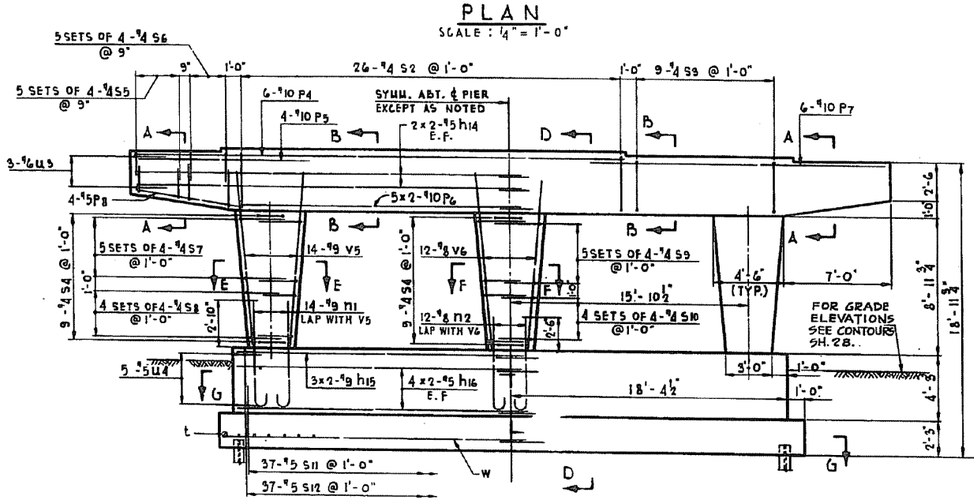

ELEVATION
SCALE: 1/4" = 1'-0"

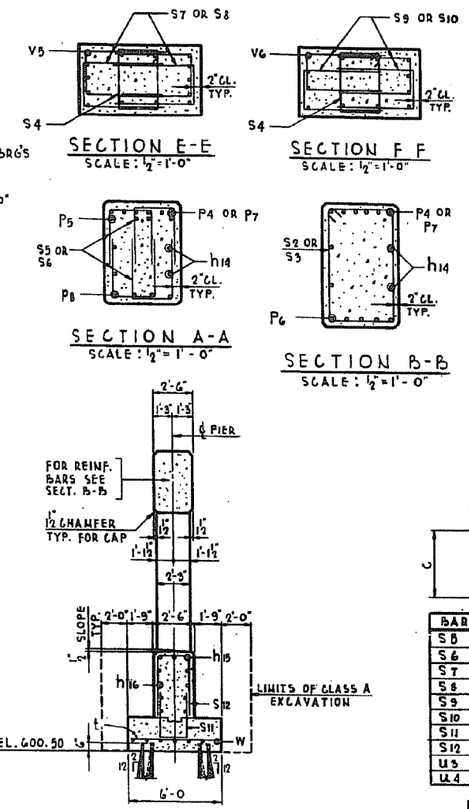

SECTION E-E
SCALE: 1/2" = 1'-0"

SECTION F-F
SCALE: 1/2" = 1'-0"

SECTION A-A
SCALE: 1/2" = 1'-0"

SECTION B-B
SCALE: 1/2" = 1'-0"

SECTION D-D
SCALE: 1/4" = 1'-0"

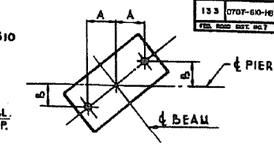

DETAIL "X"
FOR DIMENSIONS A & B SEE TABLE

BEAM	A	B
B1	5 13/16"	5 1/8"
B2	5 3/8"	5 1/16"
B3 THRU B6	5 13/16"	5"

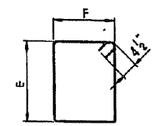

BAR	E	F
S2	5'-4"	2'-2"
S3	5'-2"	2'-2"
S4	1'-2"	1'-11"

BARS
S2, S3 & S4

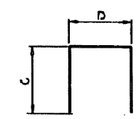

BAR	C	D
S5	2'-0"	1'-4"
S6	2'-3"	1'-4"
S7	2'-7"	1'-6"
S8	2'-4"	1'-6"
S9	2'-7"	1'-4"
S10	2'-4"	1'-4"
S11	3'-0"	2'-2"
S12	4'-1"	2'-2"
U3	2'-0"	2'-1"
U4	1'-6"	2'-1"

BARS
S5 THRU S12, U3 & U4

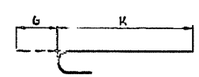

BAR	G	K
n1	1'-3"	6'-11
n2	1'-1"	6'-7"

BARS n1 & n2

NOTE:
FOR ANCHOR BOLT PROJECTION SEE SH. 25.
SPACE REINFORCEMENT IN CAP TO MISS ANCHOR BOLTS.
ALL EDGES TO HAVE STD. 3/4" CHAMFER EXCEPT AS NOTED.
POUR STEPS MONOLITHICALLY WITH PIER CAP.

KEY TO BAR INDICATION:
5x2-#10 ETC. MEANS 5 LINES OF BARS WITH 2 LENGTHS PER LINE.
MIN. BAR LAP = 20 DIA.

BAR LIST

BAR	NO.	SIZE	LENGTH	SHAPE
h14	8	5	25'-9"	
h15	6	9	19'-6"	
h16	16	5	19'-0"	
n1	28	9	8'-2"	
n2	12	8	7'-8"	
P4	6	10	22'-9"	
P5	8	10	11'-6"	
P6	10	10	19'-6"	
P7	6	10	19'-9"	
P8	8	5	7'-5"	
S2	26	4	11'-9"	
S3	9	4	11'-5"	
S4	27	4	6'-11"	
S5	40	4	5'-4"	
S6	40	4	5'-10"	
S7	40	4	6'-8"	
S8	32	4	6'-7"	
S9	20	4	6'-6"	
S10	16	4	6'-0"	
S11	37	5	8'-2"	
S12	37	5	10'-4"	
t	39	5	5'-5"	
U3	6	6	6'-1"	
U4	10	5	5'-1"	
V5	28	9	11'-9"	
V6	12	8	11'-6"	
W	14	8	20'-9"	

ALL BAR DIMENSIONS ARE OUT TO OUT.
PREFIX ALL BAR MARKS FOR SHIPMENT WITH A NUMBER INDICATING THE PIER WHERE THE BARS WILL BE USED.
EXAMPLE: 11 P7 MEANS BARS P7 FOR PIER 11.

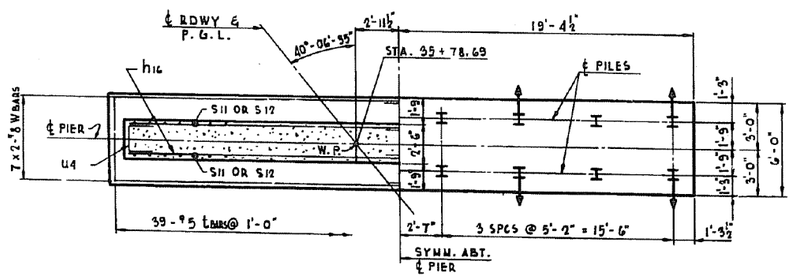

SECTION G-G
SCALE: 1/4" = 1'-0"

PILE DATA	
PILE TYPE	8BP36
MIN. CAPACITY TONS	29
NO. REQUIRED	16
EST. LENGTH FEET	25
CUT OFF ELEV.	600.00

BILL OF MATERIAL		
ITEM	UNIT	QUANTITY
CLASS A EXCAVATION	CU YD	90
CLASS X CONCRETE	CU YD	58.8
REINFORCEMENT BARS	POUND	9050
FURNISHING STEEL PILES 8BP36	LIN FT	368
DRIVING STEEL PILES	LIN FT	368

I = DENOTES BATTER PILE

DE LEUW, CATHER & CO. ENGINEERS
DESIGNED BY Y. N. HUO
DRAWN BY F. BOBINAS
CHECKED E. T. Berry
IN CHARGE E. S. MARTINS
APPROVED L. N. RIAN

JOB NO. 1179

ILLINOIS DIVISION OF HIGHWAYS
SOUTHWEST EXPRESSWAY
LAWNDALE AVE. OVER RAMP E
PIER 11
SCALE: AS NOTED | DATE

benesch
engineers · scientists · planners
Alfred Benesch & Company
205 North Michigan Avenue, Suite 2400
Chicago, Illinois 60601
312-565-0450 Job No. 10093

FOR INFORMATION ONLY

FILE NAME =	USER NAME = tjanicke	DESIGNED - FSM	REVISED -
		CHECKED - RMM	REVISED -
0160486_60J16_X16_exist_pier11.dgn	PLOT SCALE =	DRAWN - FSM	REVISED -
	PLOT DATE = 6/23/2014	CHECKED - RMM	REVISED -

STATE OF ILLINOIS
DEPARTMENT OF TRANSPORTATION

EXISTING PLANS PIER 11
STRUCTURE NO. 016-0486
SHEET NO. SGX16 OF SGX48 SHEETS

F.A.P. RTE.	SECTION	COUNTY	TOTAL SHEETS	SHEET NO.
373	2013-038B-R	COOK	821	706
		CONTRACT NO. 60J16		
		ILLINOIS FED. AID PROJECT		

X:\10000S\10093\Eng_Docs_Phase_II\SN_016_0486_0487_1st_Ave_over_Canal\Final_0486\0160486_60J16_X16_exist_pier11.dgn 2:56:34 PM 6/23/2014

F.A. RTE.	SECTION	EXPRESSWAYS	TOTAL SHEETS	SHEET NO.
133	0707-626B	SOUTHWEST	95	53
STA.		TO STA.		
FED. ROAD DIST. NO. 7	ILLINOIS	FED. AID PROJECT		

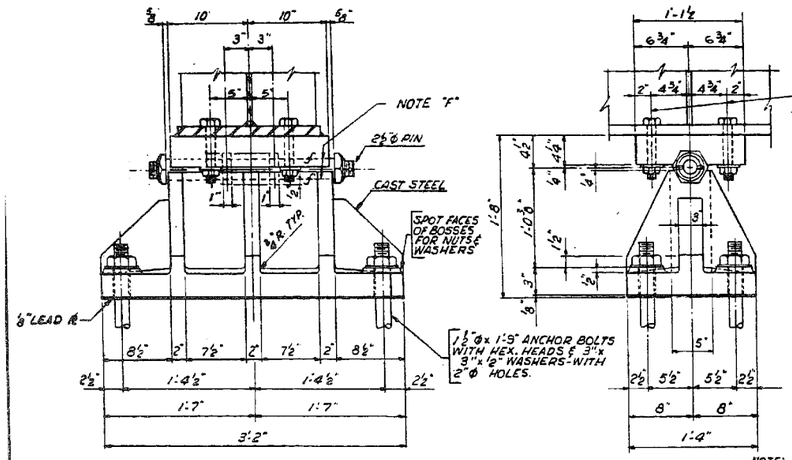

TYPE A - TYPICAL ALL GIRDERS - PIERS 4 & 15

FIXED BEARING

13 REQUIRED

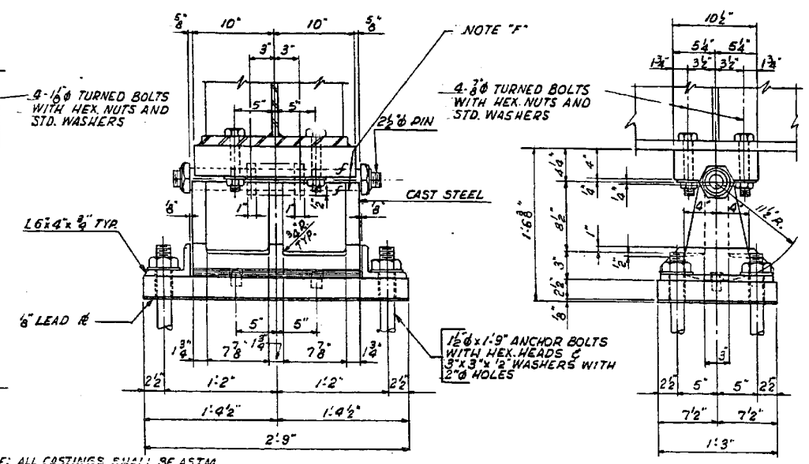

NOTE: ALL CASTINGS SHALL BE ASTM A27-60 GRADE 65-35, FULLY ANNEALED. ALL PINS SHALL BE FORGED & SHALL BE ASTM A235, CLASS F

NOTE "F"
COAT WITH ANTI-RUST COMPOUND OR LACQUER.

TYPE B - TYPICAL ALL GIRDERS - PIERS 3 & 14

EXPANSION BEARING

13 REQUIRED

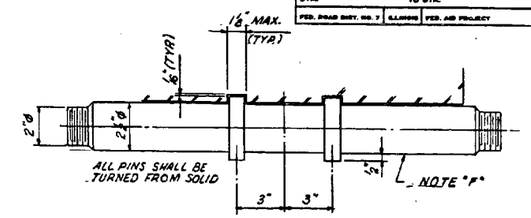

DETAIL OF COLLARS ON PIN

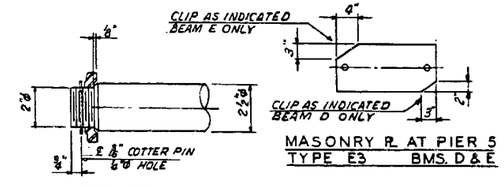

MASONRY PL AT PIER 5
TYPE E3 BMS. D & E

PIN DETAIL

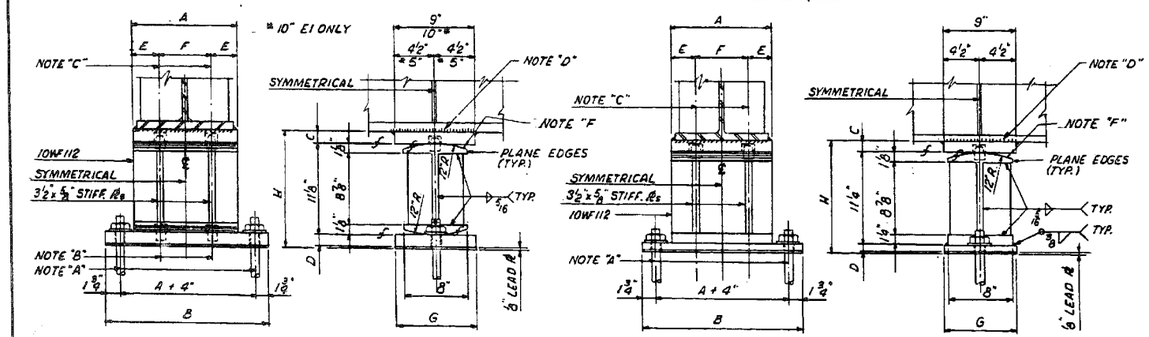

EXPANSION BEARING - TYPE E1, E2, E3, E4

FIXED BEARING - TYPE F2, F4, F5

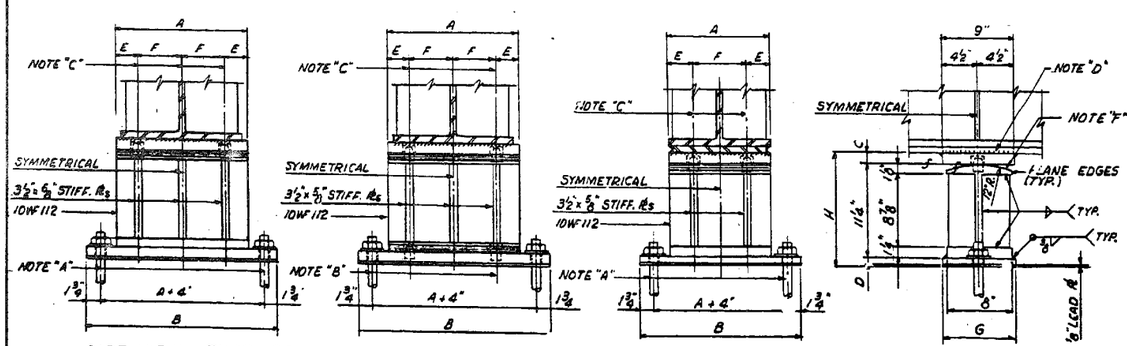

SIDE VIEW TYPE F2

SIDE VIEW TYPE E4

FIXED BEARING - TYPE F1, F3

LOCATION	A	B	C	D	E	F	G	H	C.F.W.	#REQ	WT.	TYPE
EAST ABUT. - ALL BEAMS	12½"	20"	1"	1⅜"	3"	6½"	9"	13⅜"	½	14	268	E2
PIER 1 BEAMS B THRU G	11½"	19"	1¼"	1"	3"	5½"	9"	13⅜"	½	6	240	F1
PIERS 1 & 12 - BMS. A & H & I THRU N	12½"	20"	1⅜"	¾"	3"	6½"	9"	13½"	½	8	248	F4
PIERS 2 & 13 ALL BEAMS - EAST	12½"	20"	1"	1⅜"	3	6½"	9"	13⅝"	½	14	268	E2
PIERS 2 & 13 ALL BEAMS - WEST	13"	20½"	1⅝"	1⅜"	3¼"	6½"	10"	14¼"	½	13		E1
PIERS 5 & 16 ALL BEAMS - EAST	13"	20½"	1⅝"	1⅜"	3¼"	6½"	10"	14¼"	½	13		E1
PIER 5 RAMP "F" BEAMS A THRU E	11½"	19	1"	1⅜"	3"	5½"	9"	13⅜"	⅜	5	250	E3
PIERS 5 & 16 WEST BEAMS F, G, L & M	17"	24½"	1"	1¼"	3"	5½"	9"	13½"	½	4	343	E4
PIERS 5 & 16 WEST BEAMS H, I, J, K, N, O, P & Q	11½"	19"	1"	1⅜"	3"	5½"	9"	13⅜"	⅜	8	250	E3
PIER 6 RAMP "F" BEAMS A THRU E	11½"	19"	1⅜"	¾"	3	5½"	9"	13½"	½	10	231	F5
PIERS 6 & 17 BEAMS F, G, L & M	16½"	24"	1½"	1"	2¾"	5½"	9"	13⅞"	⅝	4	344	F2
PIERS 6 & 17 BEAMS H, I, N, O	10½"	18	1"	¾"	2½"	5½"	9"	13⅛"	½	4	207	F3
PIERS 6 & 17 BMS. J, K, P, Q	11½"	19"	1⅜"	¾"	3"	5½"	9"	13½"	½	4	231	F5
RAMP "F" ABUTMENT BEAMS A THRU E	11½"	19"	1"	1⅜"	3"	5½"	9"	13⅜"	⅜	5	250	E3
PIER 7 - BEAMS F & G	17"	24½"	1"	1¼"	3"	5½"	9"	13½"	½	2	343	E4
PIER 7 - BEAMS H, I, J & K	11½"	19"	1"	1⅜"	3"	5½"	9"	13⅜"	⅜	4	250	E3
PIER 18 - BEAMS L & M	17"	24½"	1"	1¼"	3"	5½"	9"	13½"	½	2	343	E4
PIER 18 BEAMS N, O, P, & Q	11½"	19"	1"	1⅜"	3"	5½"	9"	13⅜"	⅜	4	250	E3

TABLE OF DIMENSIONS & LOCATIONS

NOTE "A"
1⅞"ø HOLES FOR 1"ø x 1'-2 ANCHOR BOLTS 2½"x 2½"x ⅜" PL WASHER UNDER NUT - TYP. FOR BEARINGS E2 THRU E4
1⅜"ø HOLES FOR 1¼"ø x 1'-6 ANCHOR BOLTS 2¾"x 2¾"x ⅝" PL WASHER UNDER NUT - TYP FOR BEARING TYPE E1 ONLY.

NOTE "B"
1⅞"ø HOLES - 1" DEEP IN ROCKER FOR 1¼"ø PINTLES
1⅜"ø PINTLES - 1⅞" LONG IN BOTT. PL THREAD OR PRESS FIT.

NOTE "C"
1⅞"ø HOLES IN TOP PL FOR 1¼"ø PINTLES.
1⅜"ø PINTLES - 1⅞" LONG IN ROCKER OR BOTT. - THREAD OR PRESS FIT.

NOTE "D"
CONT. FILLET WELD 4 SIDES - SEE "TABLE OF DIMENSIONS & LOCATIONS" THIS SHEET FOR SIZE.

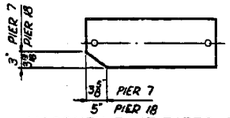

MASONRY PL AT PIERS 7 & 18
TYPE E4 - BMS. F, G, L, M.
SET CUT SIDE TO EDGE OF PIER

NOTE "E"
FOR THICKNESS OF REQUIRED SHIMPLATES, SEE "SUMMARY OF BEARINGS".

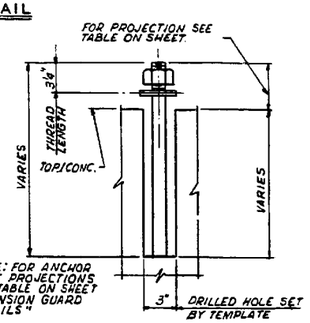

ANCHOR BOLT

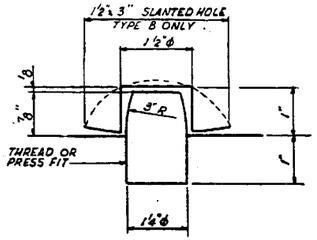

PINTLE DETAIL

WEIGHT OF BEARING DEVICES = 88,360 LBS.
(SHIMPLATES INCLUDED)

REVISIONS	
NAME	DATE
DESIGNED ST.-P.X.	
REVIEWED CWW	

ILLINOIS DIVISION OF HIGHWAYS
SOUTHWEST EXPRESSWAY
F.A. RT. 133 OVER
CHICAGO SANITARY AND SHIP CANAL
SECTION 0707-626 B
BEARING DETAILS
SCALE: HORIZ. VERT.
DATE 8-5-63
DRAWN BY J.M.
CHECKED BY L.D.B.

benesch
engineers · scientists · planners
Alfred Benesch & Company
205 North Michigan Avenue, Suite 2400
Chicago, Illinois 60601
312-565-0450 Job No. 10093

FOR INFORMATION ONLY

FILE NAME =	USER NAME = tjanicke	DESIGNED - FSM	REVISED -
		CHECKED - RMM	REVISED -
0160486_60J16_X17_exist_brgdet.dgn	PLOT SCALE =	DRAWN - FSM	REVISED -
	PLOT DATE = 6/23/2014	CHECKED - RMM	REVISED -

STATE OF ILLINOIS
DEPARTMENT OF TRANSPORTATION

EXISTING PLANS BEARING DETAILS
STRUCTURE NO. 016-0486
SHEET NO. SGX17 OF SGX48 SHEETS

F.A.P. RTE.	SECTION	COUNTY	TOTAL SHEETS	SHEET NO.
373	2013-038B-R	COOK	821	707
		CONTRACT NO. 60J16		
		ILLINOIS FED. AID PROJECT		

6/23/2014 2:56:58 PM X:\10000S\10093\Eng_Docs_Phase_II\SN_016_0486_60J16_X17_exist_brgdet.dgn

F.A. RTE.	SECTION	EXPRESSWAYS	TOTAL SHEETS	SHEET NO.
133	0707-626 B	SOUTHWEST	95	54
STA.		TO STA.		
FED. ROAD DIST. NO. 7	ILLINOIS	FED. AID PROJECT		

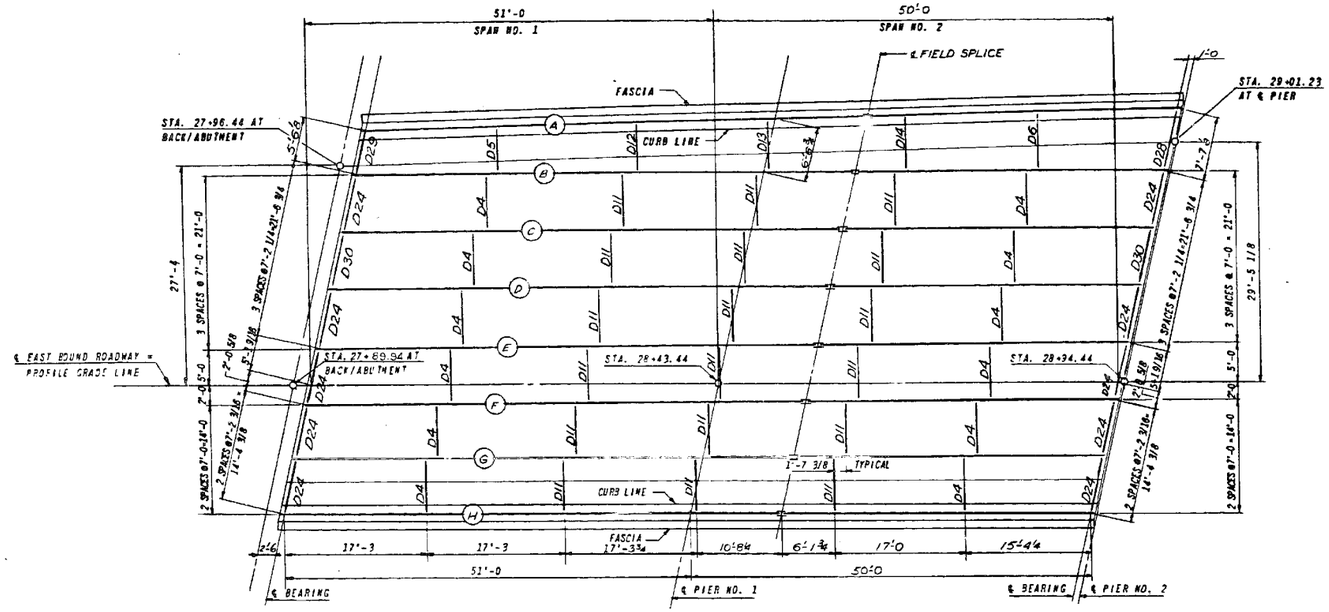

FRAMING PLAN SPANS NO.1 & NO.2
EAST BOUND

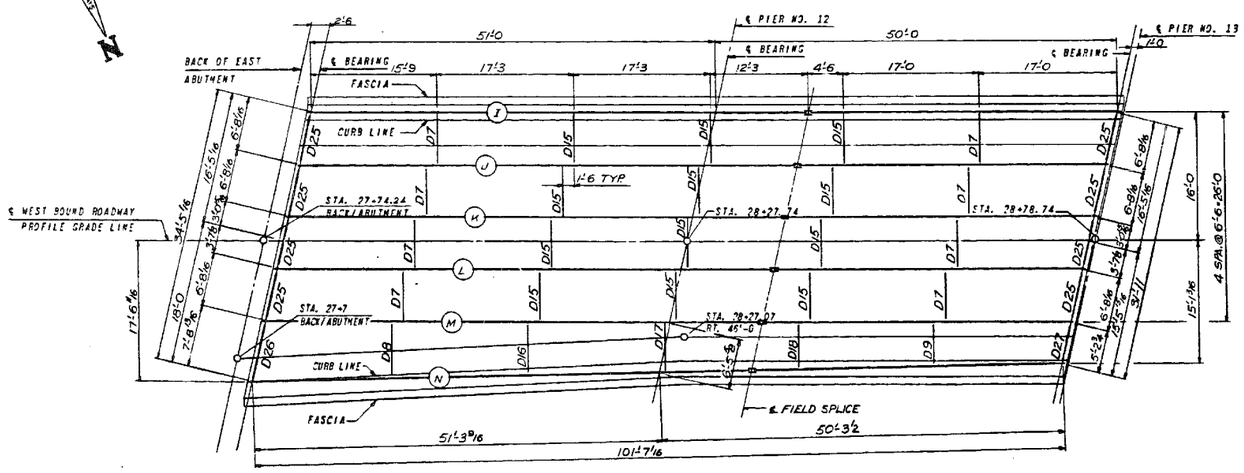

FRAMING PLAN SPANS NO. 1 & NO. 2
WEST BOUND

REVISIONS	
NAME	DATE
DESIGNED ST.	
REVIEWED CWW	

ILLINOIS DIVISION OF HIGHWAYS
SOUTHWEST EXPRESSWAY
F.A. RT. 133
LAWNDALE AVE. STRUCTURE OVER
CHICAGO SANITARY AND SHIP CANAL
SECTION 0707-626B
FRAMING PLAN SPANS 1 AND 2 E.B. & W.B.
SCALE: HORIZ. VERT.
DRAWN BY E.G.
DATE 8-5-63
CHECKED BY L.D.B.

benesch
engineers · scientists · planners
Alfred Benesch & Company
205 North Michigan Avenue, Suite 2400
Chicago, Illinois 60601
312-565-0450 Job No. 10093

FOR INFORMATION ONLY

FILE NAME = 0160486_60J16_X18_exist_framing12.dgn	USER NAME = tjanicke	DESIGNED - FSM	REVISED -
		CHECKED - RMM	REVISED -
	PLOT SCALE =	DRAWN - FSM	REVISED -
	PLOT DATE = 6/23/2014	CHECKED - RMM	REVISED -

STATE OF ILLINOIS
DEPARTMENT OF TRANSPORTATION

EXISTING PLANS FRAMING PLAN SPANS 1 AND 2
STRUCTURE NO. 016-0486

SHEET NO. SGX18 OF SGX48 SHEETS

F.A.P. RTE.	SECTION	COUNTY	TOTAL SHEETS	SHEET NO.
373	2013-038B-R	COOK	821	708
		CONTRACT NO. 60J16		
	ILLINOIS	FED. AID PROJECT		

X:\100005\10093\Eng_Docs_Phase_II\SN_016_0486_0487_1st_Ave_over_Canal\Final\0486\0160486_60J16_X18_exist_framing12.dgn 6/23/2014 2:57:00 PM

F.A. RTE.	SECTION	EXPRESSWAYS	TOTAL SHEETS	SHEET NO.
133	0707-626B	SOUTHWEST	95	55
STA.		TO STA.		
FED. ROAD DIST. NO. 7	ILLINOIS	FED. AID PROJECT		

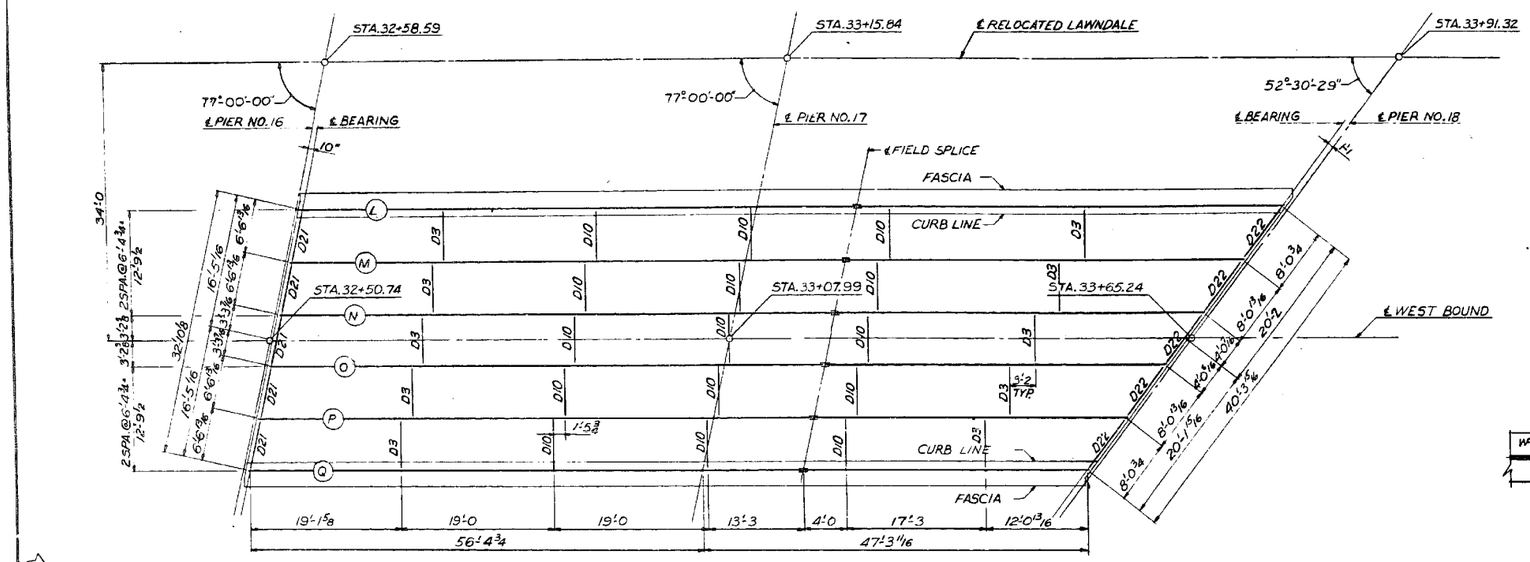

FRAMING PLAN SPAN NO. 6 & NO.7 WEST BOUND

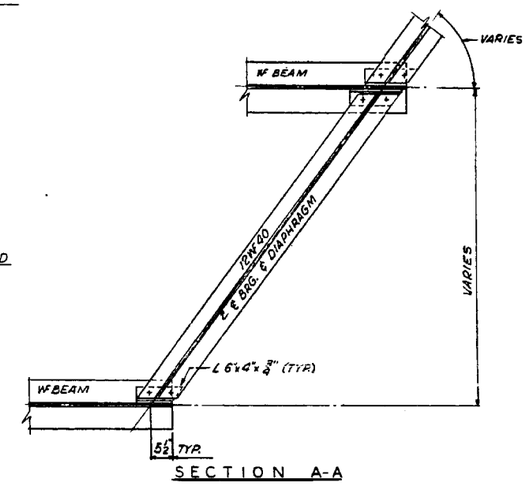

SECTION A-A

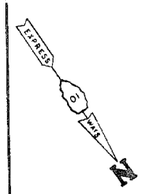

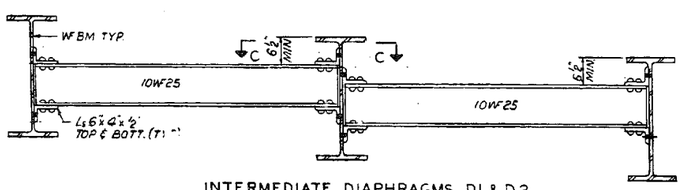

INTERMEDIATE DIAPHRAGMS D1 & D2
8-D1 & 8-D2 DIAPHRAGMS

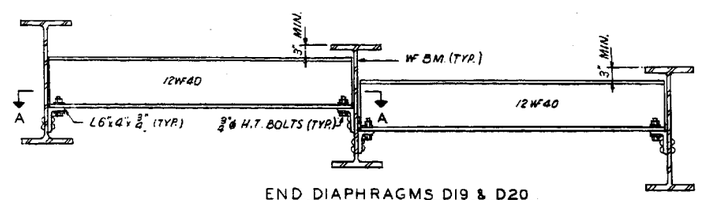

END DIAPHRAGMS D19 & D20
6-D19 & 8-D20

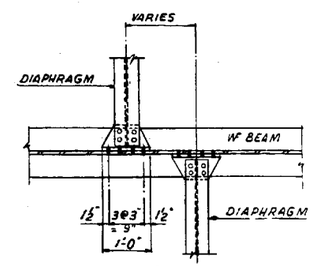

SECTION C-C

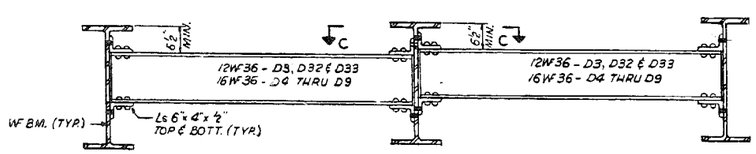

INTERMEDIATE DIAPHRAGMS D3 THRU D9 & D32, D33
20-D3, 12-D4, 8-D7. ALL OTHERS 1 EACH

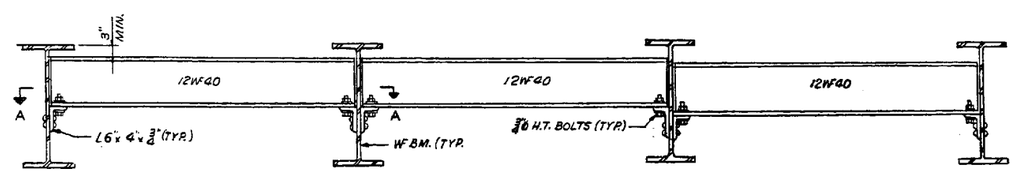

END DIAPHRAGMS D21 THRU D29
10-D21, 5-D22 & D23, 10-D24, 8-D25 ALL OTHERS 1 EACH

END DIAPHRAGMS D30 & D31
2-D30 & 1-D31

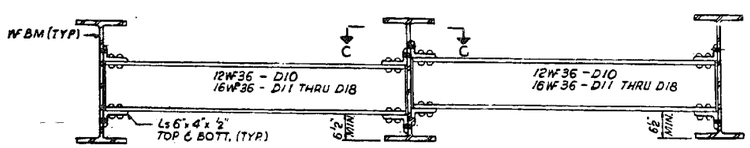

INTERMEDIATE DIAPHRAGMS D10 THRU D18
30-D10, 18-D11, 12-D15 ALL OTHERS 1 EACH

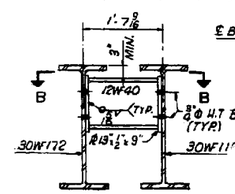

END DIAPHRAGM D34
1 REQ'D.

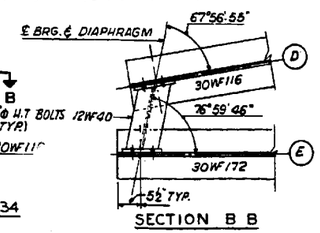

SECTION B B

REVISIONS	
NAME	DATE
DESIGNED ST.	
REVIEWED C.W.W.	

ILLINOIS DIVISION OF HIGHWAYS
SOUTHWEST EXPRESSWAY
F.A. RT. 133
LAWNDALE AVE. STRUCTURE OVER
CHICAGO SANITARY AND SHIP CANAL
SECTION 0707 - 626B
FRAMING PLAN SPAN 6 AND 7 W.B.
SCALE: HORIZ. VERT.
DATE 8-5-63
DRAWN BY D.U.
CHECKED BY L.D.B.

FOR INFORMATION ONLY

benesch
engineers · scientists · planners
Alfred Benesch & Company
205 North Michigan Avenue, Suite 2400
Chicago, Illinois 60601
312-565-0450 Job No. 10093

FILE NAME = 0160486_60J16_X19_exist_diaphragms.dgn	USER NAME = tjanicke	DESIGNED - FSM	REVISED -
		CHECKED - RMM	REVISED -
	PLOT SCALE =	DRAWN - FSM	REVISED -
	PLOT DATE = 6/23/2014	CHECKED - RMM	REVISED -

STATE OF ILLINOIS
DEPARTMENT OF TRANSPORTATION

EXISTING PLANS DIAPHRAGM DETAILS SPANS 1–2 & 6–7
STRUCTURE NO. 016–0486
SHEET NO. SGX19 OF SGX48 SHEETS

F.A.P. RTE.	SECTION	COUNTY	TOTAL SHEETS	SHEET NO.
373	2013-038B-R	COOK	821	709
		CONTRACT NO. 60J16		
		ILLINOIS FED. AID PROJECT		

X:\100000S\10093\Eng_Docs_Phase_II\SN_016_0486_0487_1st_Ave_over_Canal\Final_0486\0160486_60J16_X19_exist_diaphragms.dgn 2:57:01 PM 6/23/2014

RTE.	SECTION			
133	0707-6268	SOUTHWEST	95	58
STA.		TO STA.		
FED. ROAD DIST. NO. 7	ILLINOIS	FED. AID PROJECT		

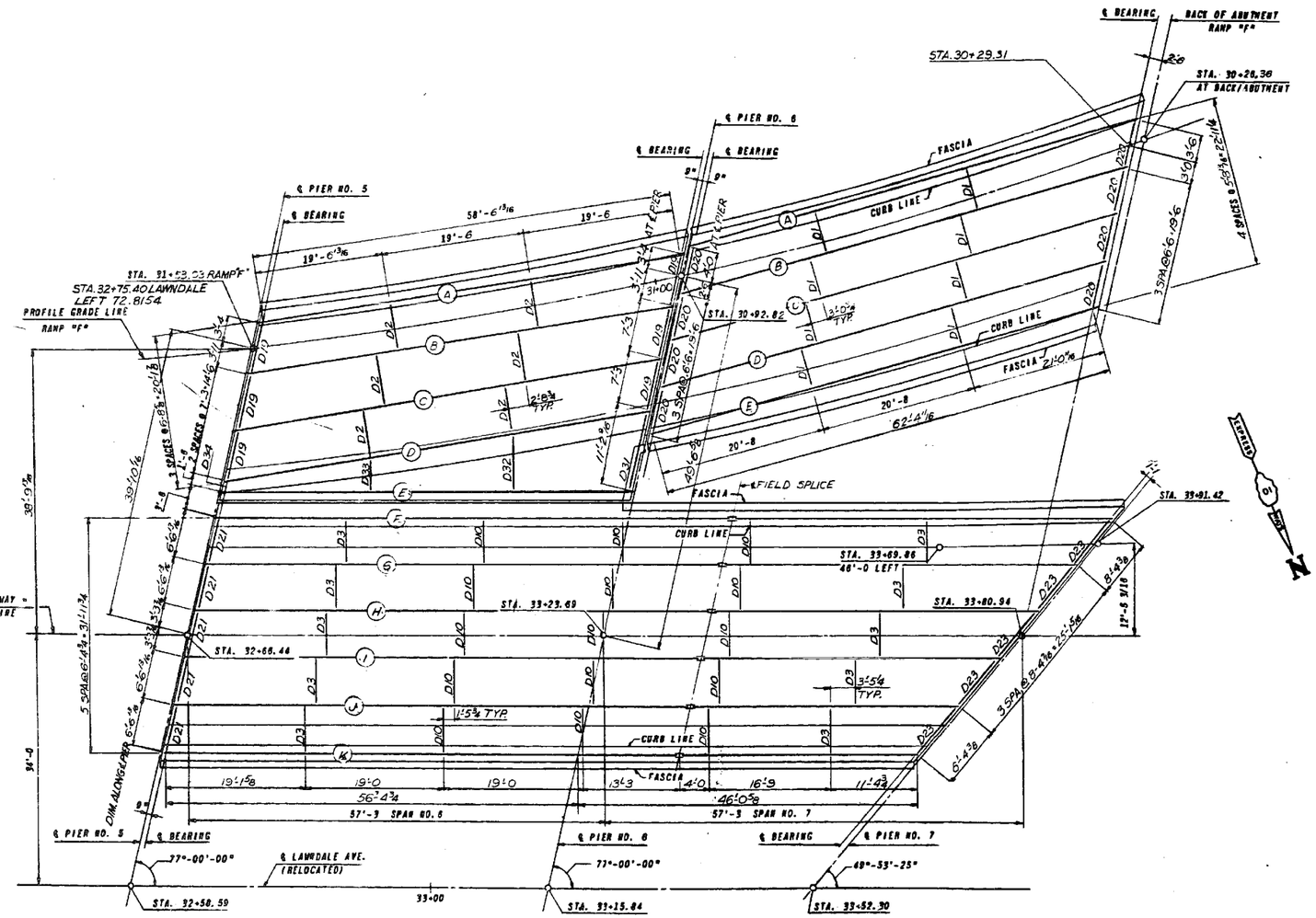

FRAMING PLAN SPANS NO. 6 & NO. 7
EAST BOUND STRUCTURES AND RAMP "F"

REVISIONS	
NAME	DATE
DESIGNED ST.	
REVIEWED CVW	

ILLINOIS DIVISION OF HIGHWAYS
SOUTHWEST EXPRESSWAY
F.A. RT 133
LAWNDALE AVE. STRUCTURE OVER CHICAGO SANITARY AND SHIP CANAL
SECTION 0707-6268
FRAMING PLAN SPAN 6 & 7 & E.B. & RAMP "F"
SCALE: HORZ. VERT. DRAWN BY J.R
DATE 8-5-63 CHECKED BY L.D.B.

benesch
engineers · scientists · planners
Alfred Benesch & Company
205 North Michigan Avenue, Suite 2400
Chicago, Illinois 60601
312-565-0450 Job No. 10093

FOR INFORMATION ONLY

FILE NAME = 0160486_60J16_X20_exist_framing67.dgn	USER NAME = tjanicke	DESIGNED - FSM	REVISED -
		CHECKED - RMM	REVISED -
	PLOT SCALE =	DRAWN - FSM	REVISED -
	PLOT DATE = 6/23/2014	CHECKED - RMM	REVISED -

STATE OF ILLINOIS
DEPARTMENT OF TRANSPORTATION

EXISTING PLANS FRAMING PLAN SPANS 6 AND 7
STRUCTURE NO. 016-0486
SHEET NO. SGX20 OF SGX48 SHEETS

F.A.P. RTE.	SECTION	COUNTY	TOTAL SHEETS	SHEET NO.
373	2013-038B-R	COOK	821	710
		CONTRACT NO. 60J16		
		ILLINOIS FED. AID PROJECT		

6/23/2014 2:57:03 PM X:\10000S\10093\Eng_Docs_Phase_II\SN_016_0486_0487_1st_Ave_over_Canal\Final\0486\0160486_60J16_X20_exist_framing67.dgn

F.A. RTE.	SECTION	EXPRESSWAYS	TOTAL SHEETS	SHEET NO.
133	07G7-6268	SOUTHWEST	95	57
STA.		TO STA.		
FED. ROAD DIST. NO. 7	ILLINOIS	FED. AID PROJECT		

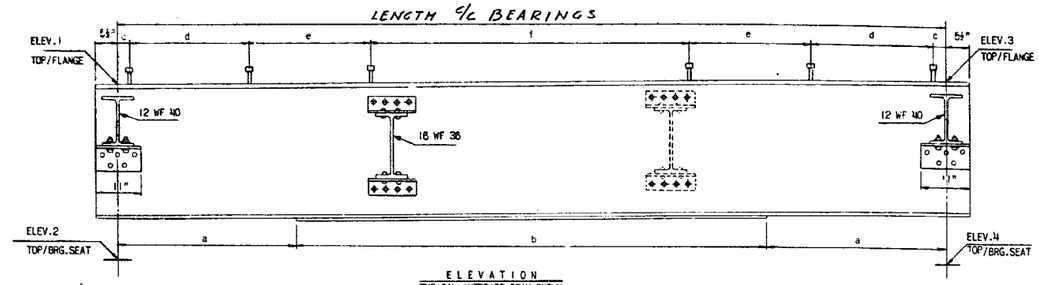

ELEVATION
TYPICAL INTERIOR BEAM SHOWN

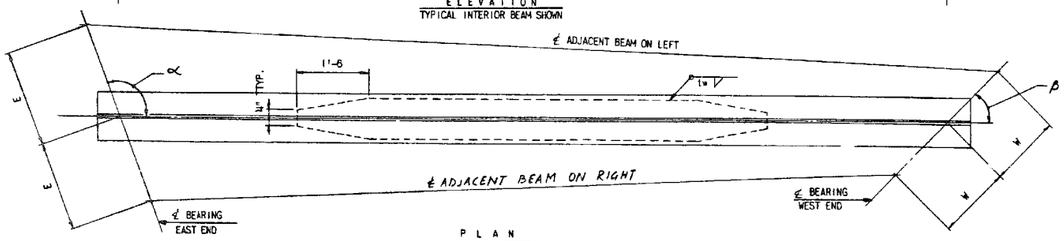

PLAN
BOTTOM FLANGE SHOWN

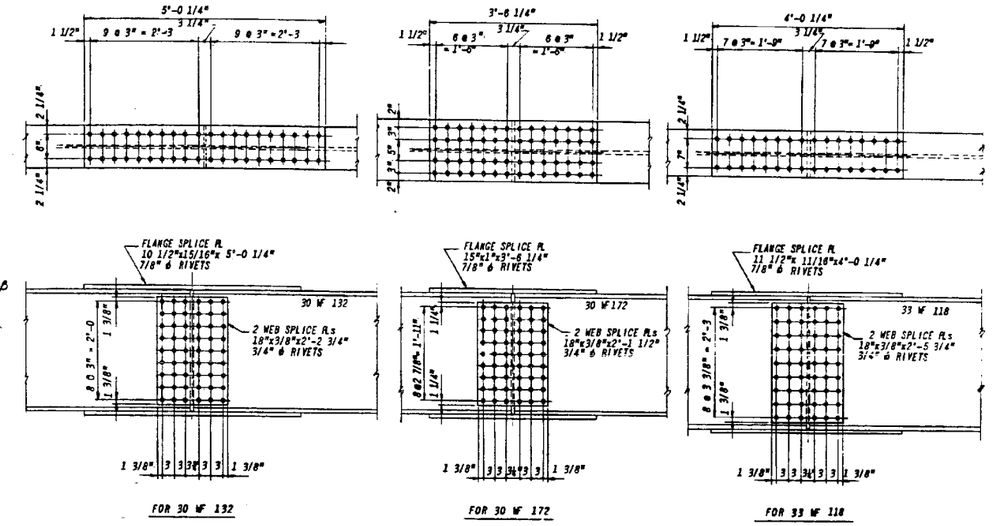

SPLICE DETAILS

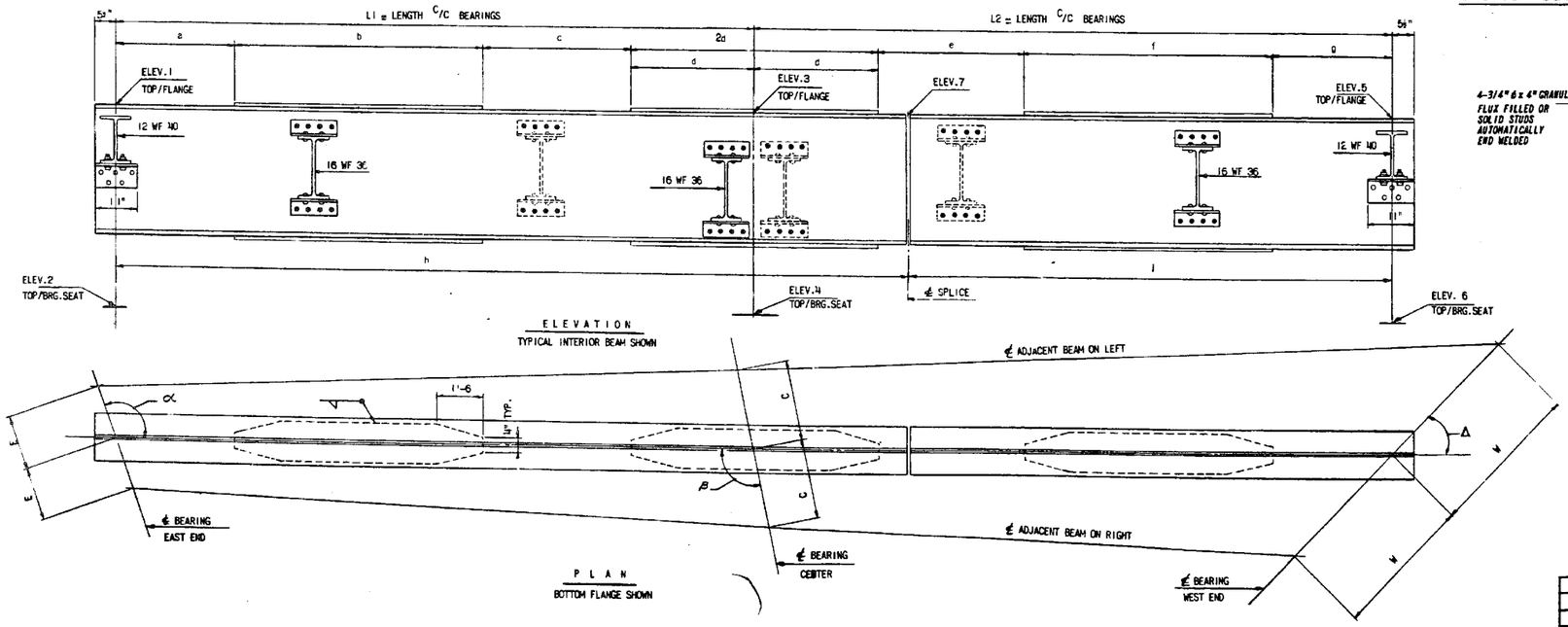

ELEVATION
TYPICAL INTERIOR BEAM SHOWN

PLAN
BOTTOM FLANGE SHOWN

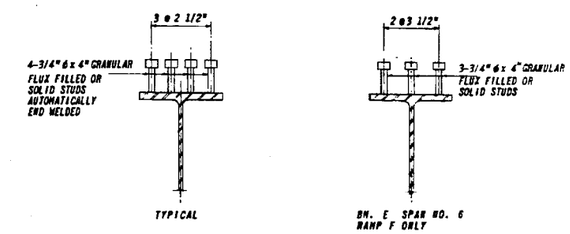

SHEAR CONNECTOR DETAILS

NOTE: SEE SHEET "ELECTRICAL DETAILS" FOR BRACKET SUPPORTS FOR CONDUITS ATTACHED TO STRUCTURE.

REVISIONS	
NAME	DATE
DESIGNED S.T.P.X.	
REVIEWED C.W.W.	

ILLINOIS DIVISION OF HIGHWAYS
SOUTHWEST EXPRESSWAY
F.A. RT. 133
LAWNDALE AVE. STRUCTURE OVER
CHICAGO SANITARY AND SHIP CANAL
SECTION 0707-626B
BEAM DETAILS
SCALE: HORIZ. VERT.
DATE 8-5-63
DRAWN BY J.S.
CHECKED BY LDB

benesch
engineers · scientists · planners
Alfred Benesch & Company
205 North Michigan Avenue, Suite 2400
Chicago, Illinois 60601
312-565-0450 Job No. 10093

FOR INFORMATION ONLY

FILE NAME =	USER NAME = tjanicke	DESIGNED - FSM	REVISED -
		CHECKED - RMM	REVISED -
0160486.60J16.X21_exist_beamdet.dgn	PLOT SCALE =	DRAWN - FSM	REVISED -
	PLOT DATE = 6/23/2014	CHECKED - RMM	REVISED -

STATE OF ILLINOIS
DEPARTMENT OF TRANSPORTATION

EXISTING PLANS BEAM DETAILS
STRUCTURE NO. 016-0486
SHEET NO. SGX21 OF SGX48 SHEETS

F.A.P. RTE.	SECTION	COUNTY	TOTAL SHEETS	SHEET NO.
373	2013-038B-R	COOK	821	711
		CONTRACT NO. 60J16		
		ILLINOIS FED. AID PROJECT		

X:\10000S\10093\Eng_Docs_Phase_II\SN_016_0486_0487_1st_Ave_over_Canal\Final_0486\0160486_60J16_X21_exist_beamdet.dgn 2:57:05 PM 6/23/2014

F.A. RTE.	SECTION	EXPRESSWAYS	TOTAL SHEETS	SHEET NO.
133	0707-626 B	SOUTHWEST	95	58
STA.		TO STA.		
FED. ROAD DIST. NO. 7	ILLINOIS	FED. AID PROJECT		

SPAN	BEAM	EAST END DATA E	ELEVATION 1	ELEVATION 2	ANGLE α	WEST END DATA W	ELEVATION 3	ELEVATION 4	ANGLE β	BEAM SIZE	LENGTH C/C BEARING	FLANGE PLATES SIZE	WELD "tw"	a	b	SHEAR CONNECTOR SPACING c	d	e	f	EAST END BRG. TYPE	SHIMPLATE	WEST END BRG. TYPE	SHIMPLATE	BEAM	REMARKS
RAMP F SPAN NO. 6	A	7'-3	623.217	619.581	67°-56'-55"	7'-3	622.701	619.017	67°-56'-55"	30 WF 116	58'-6 13/16"	9 1/2"x7/8"	5/16"	12'-9"	33'-0 13/16"	3 3/8"	1 @ 6"	12 @ 1'-0"	22 @ 1'-6"	E 3	-	F 5	11/16"	A	
	B	7'-3	623.595	619.960	do	7'-3	623.175	619.550	do	do	do	do	do	8'-9"	41'-0 13/16"	3 3/8"	20 @ 6"	12 @ 9"	20 @ 1'-0"	E 3	-	F 5	-	B	
	C	7'-3	623.965	620.329	do	7'-3	623.638	620.013	do	30 WF 116	do	9 1/2x7/8"	do	8'-9"	41'-0 13/16"	3 3/8"	20 @ 6"	12 @ 9"	20 @ 1'-0"	E 3	-	F 5	-	C	
	D	1'-7 9/16	624.326	620.677	67°-56'-55"	11'-1	624.091	620.453	67°-56'-55"	30 WF 124	58'-6 13/16"	9 1/2x1"	5/16"	10'-3"	38'-0 13/16"	3 3/8"	23 @ 6"	10 @ 9"	20 @ 1'-0"	E 3	-	F 5	-	D	
	E		624.287	620.677	76°-59'-46"		624.210	620.600	76°-59'-46"	30 WF 108	55'-8 9/16"	-	-	-	-	4 1/4"	-	14 @ 1'-0"	18 @ 1'-6"	E 3	-	F 5	-	E	3 STUDS EACH ROW ONLY
RAMP F SPAN NO. 7	A	6'-6	622.642	619.017	61°-54'-10"	6'-6	622.118	618.483	61°-54'-10"	30 WF 116	62'-4 11/16"	9 1/2"x7/8"	5/16"	13'-8"	35°-0 11/16"	5 5/8"	1 @ 9"	12 @ 1'-0"	12 @ 1'-6"	F 5	-	E 3	-	A	
	B	do	623.070	619.445	do	do	622.590	618.555	do	do	do	do	do	10'-8"	41°-0 11/16"	2 5/8"	20 @ 6"	12 @ 9"	12 @ 1'-0"	F 5	-	E 3	-	B	
	C	do	623.490	619.865	do	do	623.063	619.428	do	do	do	do	do	do	do	do	do	do	do	F 5	-	E 3	-	C	
	D	6'-6	623.901	620.276	do	do	623.538	619.902	do	do	do	do	do	10'-8"	41°-0 11/16"	2 5/8"	20 @ 6"	12 @ 9"	12 @ 1'-0"	F 5	-	E 3	-	D	
	E		624.244	620.600	61°-54'-10"	6'-6	623.993	620.258	61°-54'-10"	30 WF 116	62'-4 11/16"	9 1/2x7/8"	5/16"	13'-8	35°-0 11/16	5 5/8"	1 @ 9"	12 @ 1'-0"	12 @ 1'-6"	F 5	1/4"	E 3	-	E	

SPAN	BEAM	EAST END DATA E	ELEVATIONS 1	ELEVATIONS 2	ANGLE α	CENTER DATA C	ELEVATIONS 3	ELEVATIONS 4	ANGLE β	WEST END DATA W	ELEVATIONS 5	ELEVATIONS 6	ANGLE Δ	BEAM SIZE	LENGTH C/C BEARING L1	L2	COVER PLATES SIZE	a	b	c	d	e	f	g	SPLICE h	i	ELEV. 7	EAST END BRG. TYPE	SHIMPLATE	CENTER BRG TYPE	SHIMPLATE	WEST END BRG. TYPE	SHIMPLATE	BEAM	REMARKS
EAST BOUND SPAN NO. 1 & NO. 2	A	5'-6 1/8	625.912	622.039	75°-51'-13"	6'-6 9/4	625.703	621.840	75°-51'-13"	7'-7 1/8	625.498	621.625	75°-51'-15"	33 WF 118	51'-2 15/16	50'-2 7/8	-	51'-2 15/16	-	-	-	-	-	50'-2 7/8	62'-9 9/16	38'-8 1/4"	625.656	E 2	-	F 4	-	E 2	-	A	
	B	7'-2 1/4	626.024	622.151	77°-00'-00"	7'-2 1/4	625.837	621.932	77°-00'-00"	7'-2 1/4	625.653	621.779	77°-00'-00"	do	51'-0"	50'-0"	9" x 3/8"	46'-9"	-	-	4'-3"	-	-	45'-9	62'-6"	38'-6"	625.794	E 2	-	F 1	-	E 2	-	B	
	C	do	626.170	622.297	do	do	625.983	622.078	do	do	625.799	621.925	do	do	do	do	do	do	-	-	do	-	-	do	do	do	625.940	E 2	-	F 1	-	E 2	-	C	
	D	7'-2 1/4	626.316	622.443	do	7'-2 1/4	626.129	622.224	do	7'-2 1/4	625.945	622.071	do	do	do	do	do	do	-	-	do	-	-	do	do	do	626.086	E 2	-	F 1	-	E 2	-	D	
	E	7'-2 3/16	626.392	622.519	do	7'-2 3/16	626.205	622.300	do	7'-2 3/16	626.021	622.147	do	do	do	do	do	do	-	-	do	-	-	do	do	do	626.162	E 2	-	F 1	-	E 2	-	E	
	F	do	626.428	622.519	do	do	626.241	622.300	do	do	626.057	622.147	do	do	do	do	do	do	-	-	do	-	-	do	do	do	626.198	E 2	7/16"	F 1	11/16"	E 2	7/16"	F	
	G	7'-2 3/16	626.364	622.456	do	7'-2 3/16	626.177	622.237	do	7'-2 3/18	625.993	622.084	do	do	do	do	9" x 3/8"	46'-9"	-	-	4'-3"	-	-	45'-9	do	do	626.134	E 2	3/8"	F 1	7/16"	E 2	7/16"	G	
	H		626.280	622.393	77°-00'-00"		626.092	622.174	77°-00'-00"		625.908	622.021	77°-00'-00"	33 WF118	51'-0"	50'-0"	-	51'-0"	-	-	-	-	-	50'-0"	62'-6"	38'-6"	626.050	E 2	1/8"	F 4	3/16"	E 2	3/16"	H	
WEST BOUND SPAN NO. 1 & NO. 2	I	6'-8 1/16	626.311	622.437	77°-00'-00"	6'-8 1/16	626.123	622.260	77°-00'-00"	6'-8 1/16	625.939	622.065	77°-00'-00"	33 WF 118	51'-0"	50'-0"	-	51'-0"	-	-	-	-	-	50'-0"	62'-6"	38'-6"	626.081	E 2	-	F 4	-	E 2	-	I	
	J	do	626.401	622.528	do	do	626.214	622.350	do	do	626.030	622.156	do	do	do	do	-	do	-	-	-	-	-	60	do	do	626.171	E 2	-	F 4	-	E 2	-	J	
	K	do	626.472	622.598	do	do	626.284	622.421	do	do	626.100	622.226	do	do	do	do	-	do	-	-	-	-	-	do	do	do	626.242	E 2	-	F 4	-	E 2	-	K	
	L	6'-8 1/16	626.472	622.598	do	6'-8 1/16	626.285	622.421	do	6'-8 1/16	626.101	622.226	do	do	do	do	-	do	-	-	-	-	-	do	do	do	626.242	E 2	-	F 4	-	E 2	-	L	
	M	7'-8 13/16	626.413	622.528	77°-00'-00"	6'-5 5/8	626.225	622.338	77°-00'-00"	5'-2 3/4	626.041	622.155	77°-00'-00"	do	51'-0"	50'-0"	-	51'-0"	-	-	-	-	-	50'-0"	62'-6"	38'-6"	626.183	E 2	1/8"	F 4	3/16"	E 2	1/8"	M	
	N		626.339	622.465	75°-37'-33"		626.150	622.285	75°-37'-33"		625.965	622.092	75°-37'-33"	33 WF118	51'-3 9/16	50'-3 1/2	-	51'-3 9/16	-	-	-	-	-	50'-3 1/2	62'-10 3/8"	38'-8 11/16	626.108	E 2	-	F 4	-	E 2	-	N	
EAST BOUND SPAN NO. 6 & NO. 7	F	6'-6 13/16	624.505	620.890	77°-00'-00"	6'-6 13/16	624.298	620.600	77°-00'-00"	8'-4 3/8	624.058	620.430	49°-53'-25"	30 WF 172	56'-4 3/4	65'-7 7/16	-	56'-4 3/4"	-	-	-	-	-	65'-7 7/16	70'-5 5/8	51'-7 9/16	624.248	E 4	5/8"	F 2	-	E 4	1/8"	F	
	G	6'-6 13/16	624.596	620.981	do	6'-6 13/16	624.387	620.741	do	8'-4 7/16	624.180	620.540	do	30 WF 172	do	61'-8 7/16	-	56'-4 3/4"	-	-	-	-	-	61'-8 7/16	do	47'-8 9/16	624.335	E 4	1/4"	F 2	-	E 4	-	G	
	H	6'-6 7/8	624.664	620.981	do	6'-6 7/8	624.457	620.807	do	do	624.244	do	do	30 WF 132	do	57'-9 1/2	9"x3/8"	15'-10 3/4	13'-6"	21'-0"	6'-0"	21'-9 1/2"	13'-6"	16'-6"	do	43'-9 5/8	624.405	E 3	1/2"	F 3	-	E 3	1/2"	H	
	I	6'-6 13/16	624.670	620.981	do	6'-6 13/16	624.482	620.807	do	8'-4 7/16	624.264	do	do	do	do	53'-10 1/2	9"x3/8"	52'-4 3/4"	-	-	4'-0"	-	-	49'-10 1/2	do	39'-10 5/8	624.410	E 3	1/2"	F 3	-	E 3	3/4"	I	
	J	6'-6 13/16	624.611	620.898	do	6'-6 13/16	624.404	620.744	do	8'-4 3/8	624.220	620.540	do	do	do	49'-11 9/16	-	56'-4 3/4"	-	-	-	-	-	49'-11 9/16	do	35'-11 11/16	624.352	E 3	5/8"	F 5	1/8"	E 3	1/4"	J	
	K		624.539	620.435	77°-00'-00"		624.325	620.675	77°-00'-00"		624.156	620.480	49°-53'-25"	30 WF 132	56'-4 3/4	46'-0 5/8	-	56'-4 3/4	-	-	-	-	-	46'-0 5/8	70'-4 5/8	32'-0 3/4	624.273	E 3	7/16"	F 5	-	E 3	3/16"	K	
WEST BOUND SPAN NO. 6 & NO. 7	L	6'-6 13/16	624.563	620.948	77°-00'-00"	6'-6 13/16	624.356	620.709	77°-00'-00"	8'-0 3/4	624.118	620.503	52°-30'-29"	30 WF 172	56'-4 3/4	64'-5 9/16	-	56'-4 3/4"	-	-	-	-	-	64'-5 9/16	70'-4 5/8	50'-5 11/16	624.304	E 4	-	F 2	-	E 4	-	L	
	M	6'-6 13/16	624.453	621.009	do	6'-6 13/16	624.445	620.799	do	8'-0 13/16	624.221	620.579	do	30 WF 172	do	61'-0 3/8	-	56'-4 3/4"	-	-	-	-	-	61'-0 3/8"	do	47'-0 1/2	624.393	E 4	3/8"	F 2	-	E 4	5/16"	M	
	N	6'-6 7/8	624.722	621.009	do	6'-6 7/8	624.515	620.864	do	do	624.303	620.642	do	30 WF 132	do	57'-7 3/16	9"x3/8"	15'-10 3/4"	13'-6"	21'-0"	6'-0"	21'-10 3/16	13'-6	16'-3	do	43'-7 5/16	624.463	E 3	11/16"	F 3	-	E 3	-	N	
	O	6'-6 13/16	624.728	621.009	do	6'-6 13/16	624.520	620.864	do	8'-0 13/16	624.321	620.642	do	do	do	54'-3	9"x3/8"	52'-4 3/4"	-	-	4'-0	-	-	50'-2	do	40'-2 1/8	624.468	E 3	11/16"	F 3	1/16"	E 3	3/16"	O	
	P	6'-6 13/16	624.669	621.009	do	6'-6 13/16	624.461	620.801	do	8'-0 3/4	624.275	620.579	do	do	do	50'-8 13/16	-	56'-4 3/4"	-	-	-	-	-	50'-8 13/16	do	36'-8 15/16	624.409	E 3	-	F 5	1/8"	E 3	1/2"	P	
	Q		624.590	620.430	77°-00'-00"		624.383	620.733	77°-00'-00"		624.209	620.500	52°-30'-29"	30 WF 132	56'-4 3/4	47'-3 11/16	-	56'-4 3/4"	-	-	-	-	-	47'-3 11/16	70'-4 5/8	33'-3 13/16	624.331	E 3	-	F 5	-	E 3	9/16"	Q	

STRUCTURAL STEEL SPANS NO. 1, NO. 2, NO. 6 & NO. 7 EAST BOUND
SPANS NO. 1, NO. 2, NO. 6 & NO. 7 WEST BOUND, SPANS NO. 6 & NO. 7 RAMP F

WEIGHT OF STUDS	2,211	LBS.
WEIGHT OF BEARING DEVICES	26,246	LBS.
WEIGHT OF 1 1/2" OPEN JOINT DEVICES	7,016	LBS.
FRAMING STEEL	507,710	LBS.
FURNISHING AND ERECTING STRUC STEEL	543,183	LBS.

REVISIONS	
NAME	DATE
DESIGNED ST-PX	
REVIEWED CWW	

ILLINOIS DIVISION OF HIGHWAYS
SOUTHWEST EXPRESSWAY
F.A. RT. 133
LAWNDALE AVE. STRUCTURE OVER CHICAGO SANITARY AND SHIP CANAL
SECTION 0707-626B
SUMMARY OF BEAMS
SCALE: HORIZ. VERT.
DATE 8-3-83
DRAWN BY ST.
CHECKED BY L.D.B.

benesch engineers · scientists · planners
Alfred Benesch & Company
205 North Michigan Avenue, Suite 2400
Chicago, Illinois 60601
312-565-0450 Job No. 10093

FOR INFORMATION ONLY

FILE NAME = 0160486_60J16_X22_exist_beams.dgn	USER NAME = tjanicke	DESIGNED - FSM	REVISED -
		CHECKED - RMM	REVISED -
	PLOT SCALE =	DRAWN - FSM	REVISED -
	PLOT DATE = 6/23/2014	CHECKED - RMM	REVISED -

STATE OF ILLINOIS
DEPARTMENT OF TRANSPORTATION

EXISTING PLANS SUMMARY OF BEAMS
STRUCTURE NO. 016-0486
SHEET NO. SGX22 OF SGX48 SHEETS

F.A.P. RTE.	SECTION	COUNTY	TOTAL SHEETS	SHEET NO.
373	2013-038B-R	COOK	821	712
		CONTRACT NO. 60J16		
		ILLINOIS FED. AID PROJECT		

6/23/2014 2:57:07 PM X:\10000S\10093\Eng_Docs_Phase_II\SN_016_0486_0487_1st_Ave_over_Canal\Final\Final_0486\0160486_60J16_X22_exist_beams.dgn

F.A. RTE.	SECTION	EXPRESSWAYS	TOTAL SHEETS	SHEET NO.
133	0707-626 B	SOUTH WEST		61
STA.		TO STA.		
FED. ROAD DIST. NO. 7	ILLINOIS	FED. AID PROJECT		

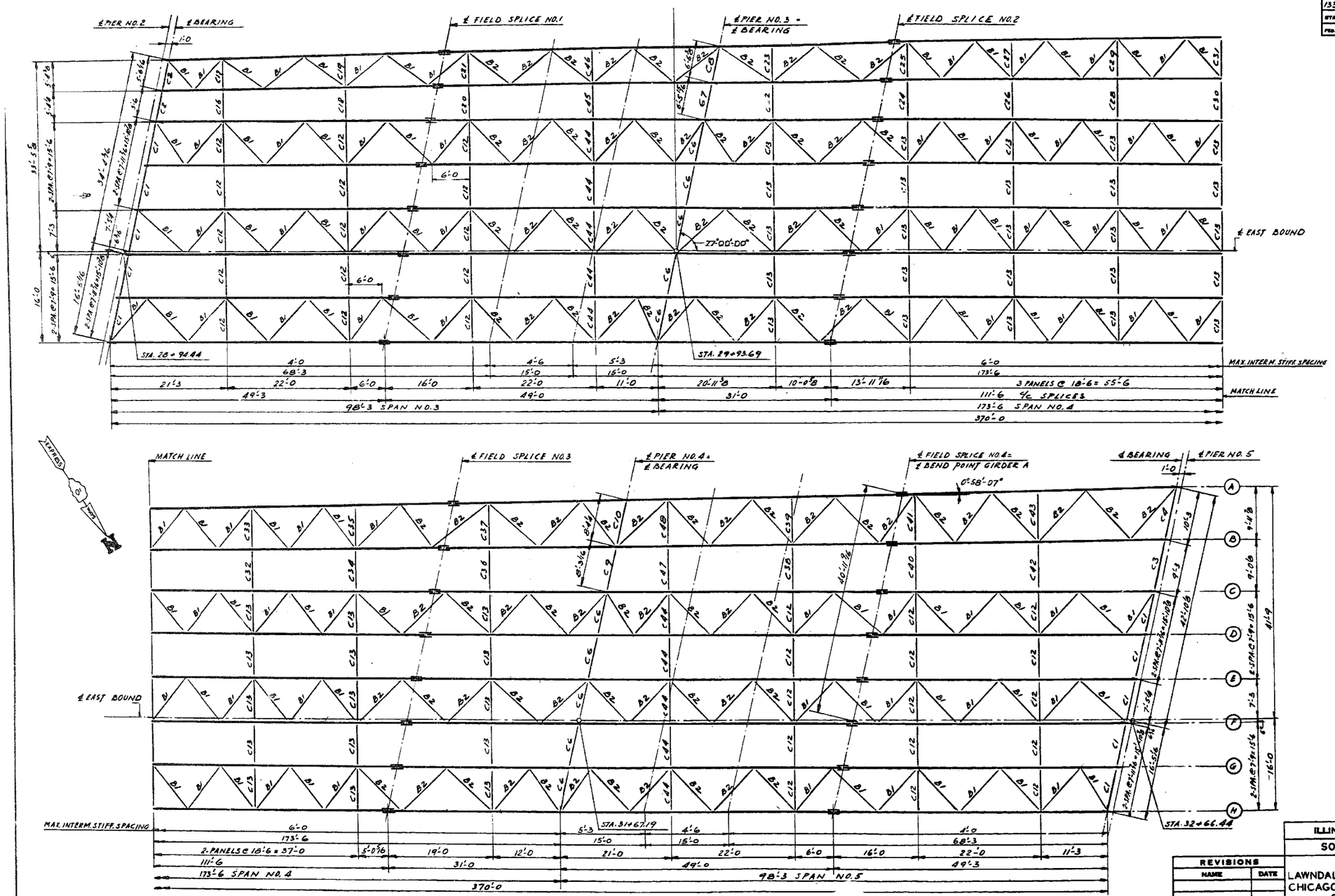

REVISIONS	
NAME	DATE
DESIGNED ST.-PX	
REVIEWED C.W.H.	

ILLINOIS DIVISION OF HIGHWAYS

SOUTHWEST EXPRESSWAY

F.A. RT. 133

LAWNDALE AVE. STRUCTURE OVER CHICAGO SANITARY AND SHIP CANAL

SECTION 0707-626B

FRAMING PLAN SPAN 3 THRU 5 E.B.

SCALE: HORIZ. VERT.

DATE 8-5-63

DRAWN BY J.S.

CHECKED BY L.D.B.

benesch
engineers · scientists · planners
Alfred Benesch & Company
205 North Michigan Avenue, Suite 2400
Chicago, Illinois 60601
312-565-0450 Job No. 10093

FOR INFORMATION ONLY

FILE NAME =	USER NAME = tjanicke	DESIGNED - FSM	REVISED -
		CHECKED - RMM	REVISED -
0160486_60J16_X23_exist_framing35.dgn	PLOT SCALE =	DRAWN - FSM	REVISED -
	PLOT DATE = 6/23/2014	CHECKED - RMM	REVISED -

STATE OF ILLINOIS
DEPARTMENT OF TRANSPORTATION

EXISTING PLANS FRAMING PLAN SPANS 3 THRU 5
STRUCTURE NO. 016-0486

SHEET NO. SGX23 OF SGX48 SHEETS

F.A.P. RTE.	SECTION	COUNTY	TOTAL SHEETS	SHEET NO.
373	2013-038B-R	COOK	821	713
		CONTRACT NO. 60J16		
		ILLINOIS FED. AID PROJECT		

X:\10000S\10093\Eng_Docs_Phase_II\SN_016_0486_0487_1st_Ave_over_Canal\Final_0486\0160486_60J16_X23_exist_framing35.dgn 2:57:09 PM 6/23/2014

F.A. RTE.	SECTION	EXPRESSWAYS	TOTAL SHEETS	SHEET NO.
133	0707-626B	SOUTHWEST	95	63
STA.		TO STA.		
FED. ROAD DIST. NO. 7	ILLINOIS	FED. AID PROJECT		

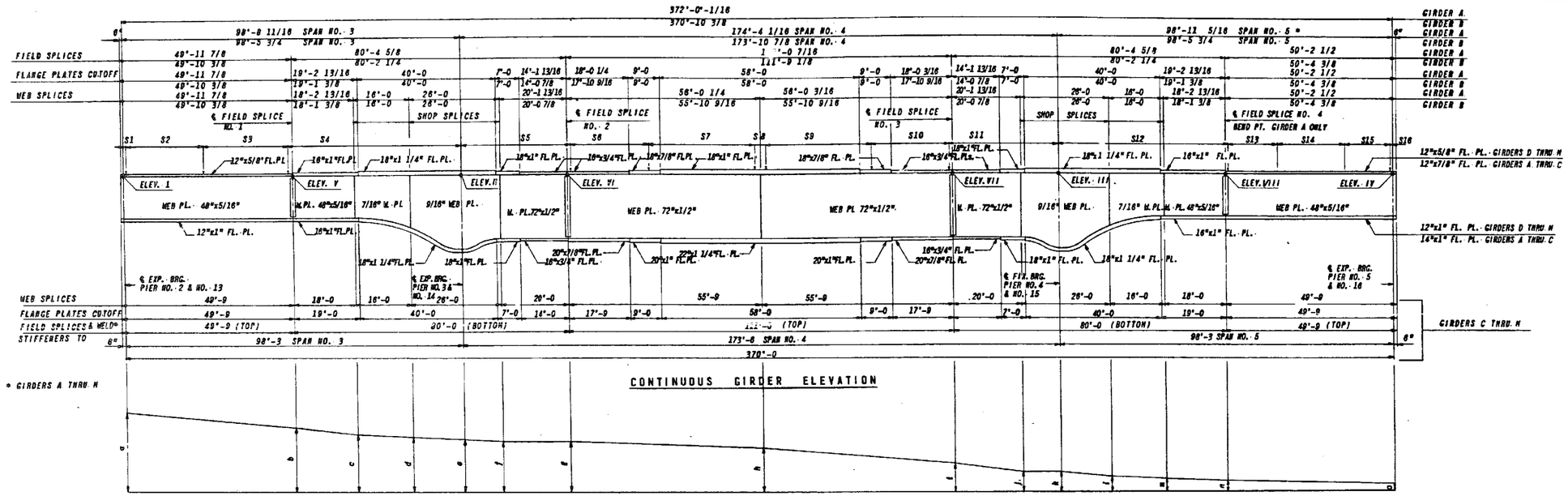

CONTINUOUS GIRDER ELEVATION

BLOCKING DIAGRAM

CONTINUOUS GIRDER BLOCKING DIAGRAM SPAN NO. 3 THRU NO. 5 EAST BOUND & WEST BOUND

GIRDER	TOP OF WEB ELEVATIONS* AT I	II	III	IV	V	VI	VII	VIII	BLOCKING AT a	b	c	d	e	f	g	h	i	j	k	l	m	n	o
A	5.385	4.983	3.949	3.118	5.191	4.967	4.332	3.650	2'-3 3/16	2'-0 7/8	1'-11 7/16	1'-10 5/8	1'-10 3/8	1'-10 3/16	1'-10 3/16	1'-9 7/16	1'-2 9/16	0'-11 3/16	0'-10	0'-8 3/8	0'-6 13/16	0'-5 3/16	0
B	5.497	5.116	4.225	3.658	5.204	5.085	4.623	3.913	1'-10 1/16	1'-7 3/4	1'-8 5/8	1'-5 13/16	1'-5 1/2	1'-5 1/4	1'-5 1/8	1'-3 11/16	0'-10 3/8	0'-7 7/8	0'-6 13/16	0'-5 3/8	0'-4 1/4	0'-3 7/16	0
C	5.609	5.247	4.493	4.131	5.428	5.220	4.735	4.230	1'-5 3/4	1'-3 9/16	1'-2 3/16	1'-1 9/16	1'-1 3/8	1'-1 1/4	1'-1 1/16	1'-0	0'-7 1/4	0'-5 5/16	0'-4 3/8	0'-3 1/8	0'-2 5/16	0'-1 3/16	0
D	5.771	5.409	4.171	4.409	5.597	5.367	4.966	4.607	1'-4 5/16	1'-2 1/4	1'-1 3/16	1'-0 11/16	1'-0	0'-11 1/2	0'-11 1/2	0'-10 9/16	0'-6 11/16	0'-4 15/16	0'-4 5/16	0'-3 7/16	0'-2 15/16	0'-2 3/8	0
E	5.885	5.523	4.885	4.523	5.711	5.481	5.080	4.721	do	do	do	do	do	do	do	do	do	do	do	do	do	do	do
F	5.959	5.597	4.959	4.597	5.785	5.555	5.154	4.795	do	do	do	do	do	do	do	do	do	do	do	do	do	do	do
G	5.888	5.526	4.888	4.526	5.714	5.484	5.083	4.724	do	do	do	do	do	do	do	do	do	do	do	do	do	do	do
H	5.797	5.435	4.797	4.435	5.623	5.393	4.992	4.633	do	do	do	do	do	do	do	do	do	do	do	do	do	do	do
I	5.827	5.466	4.827	4.466	5.654	5.424	5.023	4.664	do	do	do	do	do	do	do	do	do	do	do	do	do	do	do
J	5.834	5.473	4.834	4.753	5.941	5.711	5.310	4.951	do	do	do	do	do	do	do	do	do	do	do	do	do	do	do
K	6.021	5.659	5.021	4.659	5.847	5.617	5.216	4.857	do	do	do	do	do	do	do	do	do	do	do	do	do	do	do
L	5.948	5.586	4.948	4.586	5.774	5.544	5.143	4.784	do	do	do	do	do	do	do	do	do	do	do	do	do	do	do
M	5.855	5.493	4.855	4.493	5.681	5.451	5.050	4.691	1'-4 5/16	1'-2 1/4	1'-1 3/16	1'-0 11/16	1'-0	0'-11 1/2	0'-11 1/2	0'-10 9/16	0'-6 11/16	0'-4 15/16	0'-4 5/16	0'-3 7/16	0'-2 15/16	0'-2 3/8	0

* ADD 620 TO ALL ELEVATIONS

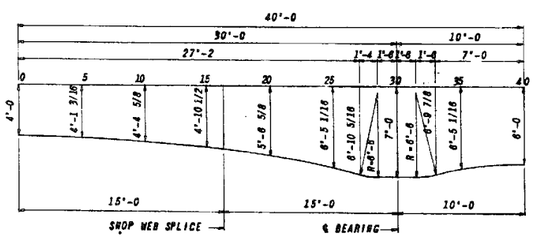

HAUNCH DETAIL

STRUCTURAL STEEL SPAN NO. 3 THRU NO. 5 EAST BOUND AND WEST BOUND:

WEIGHT OF STUDS	7,499	LBS.
WEIGHT OF BEARING DEVICES	62,114	LBS.
WEIGHT OF EXPANSION GUARDS	21,734	LBS.
FRAMING STEEL	1,380,470	LBS.
FURNISHING AND ERECTING STRUCTURAL STEEL	1,471,817	LBS.

SHEAR CONNECTOR SPACINGS

GIRDER	S1	S2	S3	S4	S5	S6	S7	S8	S9	S10	S11	S12	S13	S14	S15	S16
A	– 0'-3	28 @ 0'-9 21'-0	21 @ 1'-3 26'-3	– 51'-2 11/16	– 33'-3	28 @ 0'-11 25'-8	– –	34 @ 1'-6 51'-0	– –	34 @ 0'-11 31'-2	– 33'-3 1/16	– 51'-2 11/16	13 @ 1'-9 18'-3	12 @ 1'-0 12'-0	29 @ 0'-8 19'-4	– 0'-1 5/8
B	– do	do	do	– 50'-11 3/4	– 33'-0 1/2	do	do	do	do	do	– 33'-0 3/8	– 51'-1 3/8	do	do	28 @ 0'-8 18'-8	– 0'-5 3/8
C	– do	28 @ 0'-9 21'-0	21 @ 1'-3 26'-3	– 50'-9	– 32'-10	28 @ 0'-11 25'-8	– –	1'-6 -0	– –	34 @ 0'-11 31'-2	– 32'-10	– 50'-9	13 @ 1'-3 18'-3	12 @ 1'-0 12'-0	28 @ 0'-8 18'-8	– 0'-7
D thru H	– 0'-3	33 @ 0'-9 24'-9	18 @ 1'-3 22'-6	– 50'-9	– 33'-0	48 @ 9" = 36'-0	10 @ 1'-6 = 15'-0	9 @ 1'-10 = 5'-6	10 @ 1'-6 = 15'-0	48 @ 9" = 36'-0	– 33'-0	– 50'-9	18 @ 1'-3 22'-6	33 @ 0'-9 24'-9	– –	– 0'-3

REVISIONS	
NAME	DATE
DESIGNED P.K.-S.T.	
REVIEWED C.W.W.	

ILLINOIS DIVISION OF HIGHWAYS

SOUTHWEST EXPRESSWAY

F.A. RT. 133
LAWNDALE AVE. STRUCTURE OVER
CHICAGO SANITARY AND SHIP CANAL
SECTION 0707-626B
CONTINUOUS GIRDER DETAILS

SCALE: HORIZ. VERT.
DATE 8-5-63
DRAWN BY D.W.U.
CHECKED BY L.D.B.

benesch
engineers · scientists · planners
Alfred Benesch & Company
205 North Michigan Avenue, Suite 2400
Chicago, Illinois 60601
312-565-0450 Job No. 10093

FOR INFORMATION ONLY

FILE NAME =	USER NAME = tjanicke	DESIGNED - FSM	REVISED -
		CHECKED - RMM	REVISED -
0160486_60J16_X24_exist_girdel.dgn	PLOT SCALE =	DRAWN - FSM	REVISED -
	PLOT DATE = 6/23/2014	CHECKED - RMM	REVISED -

STATE OF ILLINOIS
DEPARTMENT OF TRANSPORTATION

EXISTING PLANS GIRDER ELEVATION
STRUCTURE NO. 016-0486

SHEET NO. SGX24 OF SGX48 SHEETS

F.A.P. RTE.	SECTION	COUNTY	TOTAL SHEETS	SHEET NO.
373	2013-038B-R	COOK	821	714
		CONTRACT NO. 60J16		
		ILLINOIS FED. AID PROJECT		

X:\10000S\10093\Eng_Docs_Phase_II\SN_016_0486_0487_1st_Ave_over_Canal\Final\Final_0486\0160486_60J16_X24_exist_girdel.dgn 2:57:12 PM 6/23/2014

F.A. RTE.	SECTION	EXPRESSWAYS	TOTAL SHEETS	SHEET NO.
133	0707-626B	SOUTHWEST	95	64
STA.		TO STA.		
FED. ROAD DIST. NO. 7	ILLINOIS	FED. AID PROJECT		

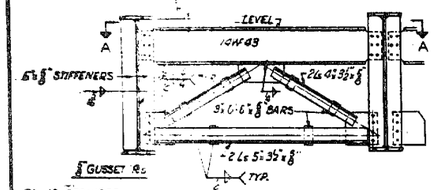

C1-10 REQUIRED
C2-2 "
C3-1 "
C4-1 "
C5-8 "

TYPICAL END CROSSFRAME
TYPES C1 THRU C5

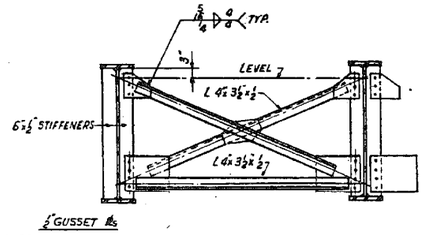

C12-30 REQUIRED
C13-35 "
C14-24 "
C15-32 "
ALL OTHERS 1 EACH

TYPICAL INTERMEDIATE CROSSFRAME
TYPES C12 THRU C22 - C24 THRU C38
C40 THRU C43

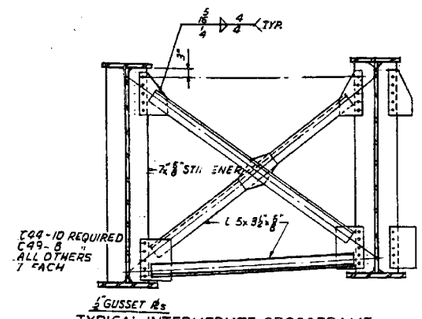

C39-10 REQUIRED
C49-8 "
ALL OTHERS 1 EACH

TYPICAL INTERMEDIATE CROSSFRAME
AT HAUNCH C23, C39, & C44 THRU C49

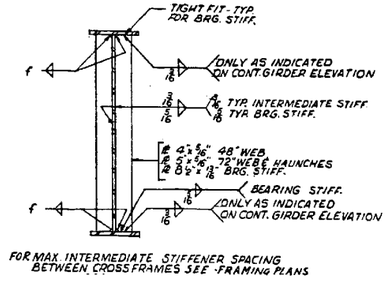

FOR MAX. INTERMEDIATE STIFFENER SPACING BETWEEN CROSSFRAMES SEE FRAMING PLANS

TYPICAL STIFFENER DETAIL

FLANGE THICKNESS	f
3/4" TO 1½" INCL.	5/16"
1½" TO 2¼" INCL.	3/8"

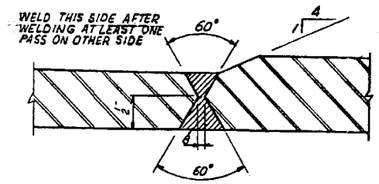

FLANGE SHOP WELD

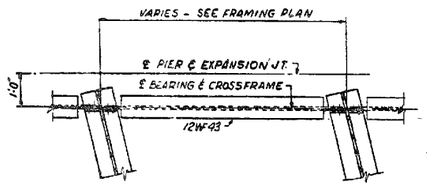

SECTION A-A

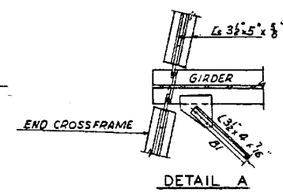

DETAIL A

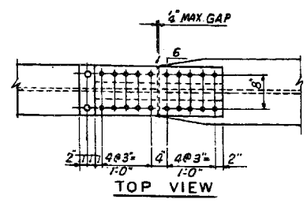

TOP VIEW

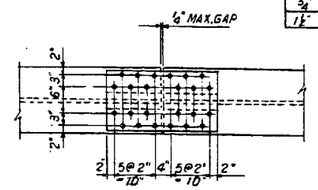

TOP VIEW

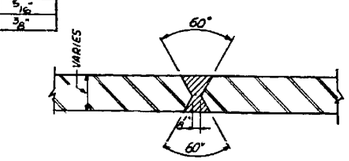

WEB SHOP WELD

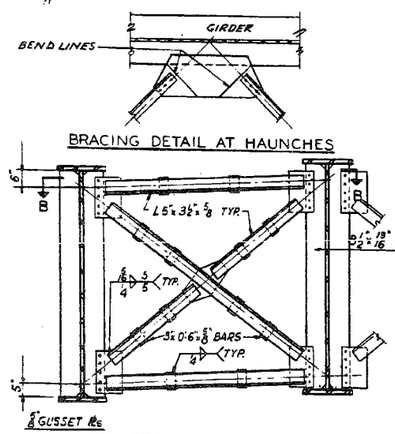

BRACING DETAIL AT HAUNCHES

TYPICAL CROSSFRAME AT PIERS 3,4,14,15
TYPE C6 THRU C11

C6-10 REQUIRED
C11-8 "
ALL OTHERS 1 EACH

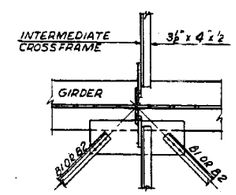

DETAIL B

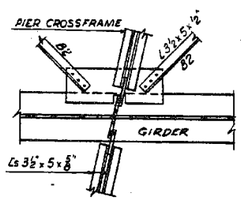

DETAIL C

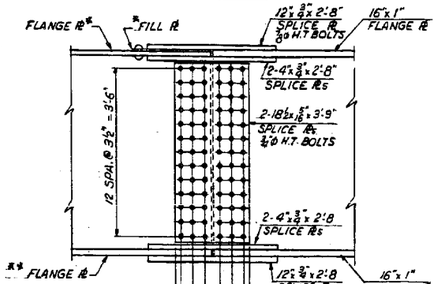

** 12"x 5/8" EXCEPT GIRDERS A,B,C SPAN 5 E.B ARE 12"x 7/8"
FILL Pls 12"x 3/8"x 1'-8" EXCEPT GIRDERS A,B,C SPAN 5 E.B ARE 12"x 5/8"x 1'-8"
*** 12"x 1" EXCEPT GIRDERS A,B,C SPAN 5 ARE 14"x 1"

FIELD SPLICE NO 1 & 4
SPLICE 1 SHOWN - 4 OPPOSITE HAND

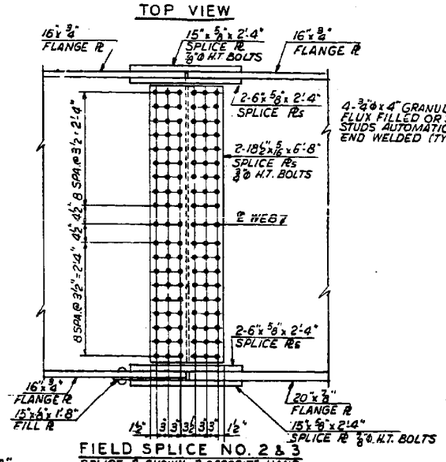

FIELD SPLICE NO. 2 & 3
SPLICE 2 SHOWN - 3 OPPOSITE HAND

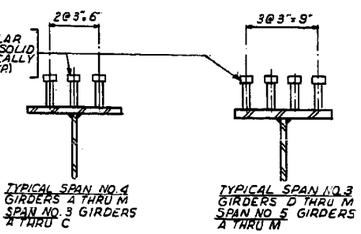

SHEAR CONNECTOR DETAILS

C6-10 REQUIRED
C11-8 "
ALL OTHERS 1 EACH

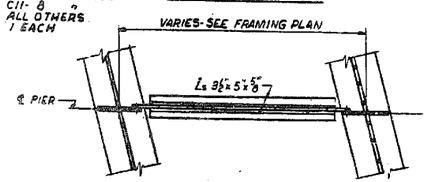

SECTION B B

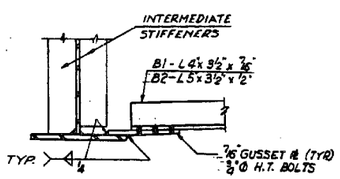

WELD DETAIL

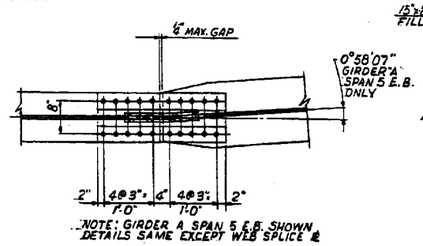

NOTE: GIRDER A SPAN 5 E.B. SHOWN DETAILS SAME EXCEPT WEB SPLICE Pl

BOTTOM VIEW

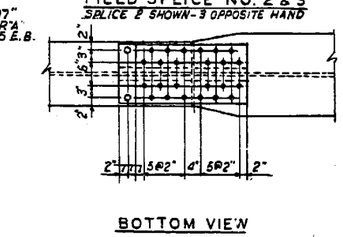

BOTTOM VIEW

NOTE: SEE SHEET "ELECTRICAL DETAILS" FOR BRACKET SUPPORTS FOR CONDUITS ATTACHED TO STRUCTURE

REVISIONS	
NAME	DATE
DESIGNED ST-F.V.	
REVIEWED C.W.W.	

ILLINOIS DIVISION OF HIGHWAYS
SOUTHWEST EXPRESSWAY
F.A. RT. 133
LAWNDALE AVE. STRUCTURE OVER CHICAGO SANITARY AND SHIP CANAL
SECTION 0707 - 626 B
STRUCTURAL STEEL DETAILS
SCALE: HORIZ. VERT.
DRAWN BY L.A.
DATE 8-5-03
CHECKED BY L.D.B.

benesch
engineers · scientists · planners
Alfred Benesch & Company
205 North Michigan Avenue, Suite 2400
Chicago, Illinois 60601
312-565-0450 Job No. 10093

FOR INFORMATION ONLY

FILE NAME =	USER NAME = tjanicke	DESIGNED - FSM	REVISED -
		CHECKED - RMM	REVISED -
0160486_60J16_X25_exist_steel_det.dgn	PLOT SCALE =	DRAWN - FSM	REVISED -
	PLOT DATE = 6/23/2014	CHECKED - RMM	REVISED -

STATE OF ILLINOIS
DEPARTMENT OF TRANSPORTATION

EXISTING PLANS STEEL DETAILS
STRUCTURE NO. 016-0486
SHEET NO. SGX25 OF SGX48 SHEETS

F.A.P. RTE.	SECTION	COUNTY	TOTAL SHEETS	SHEET NO.
373	2013-038B-R	COOK	821	715
		CONTRACT NO. 60J16		
		ILLINOIS FED. AID PROJECT		

6/23/2014 2:57:13 PM X:\10000S\10093\Eng_Docs_Phase_II\SN_016_0486_0487_1st_Ave_over_Canal\Final\0486_60J16_X25_exist_steel_det.dgn

FED. AID PROJECT NO.	SEC.	COUNTY	TOTAL SHEETS	SHEET NO.
133	0707-410 HB	COOK	29	22
FED. ROAD DIST. NO. 7	ILLINOIS	FED. AID PROJECT		

SHEET NO. 22 SHEETS

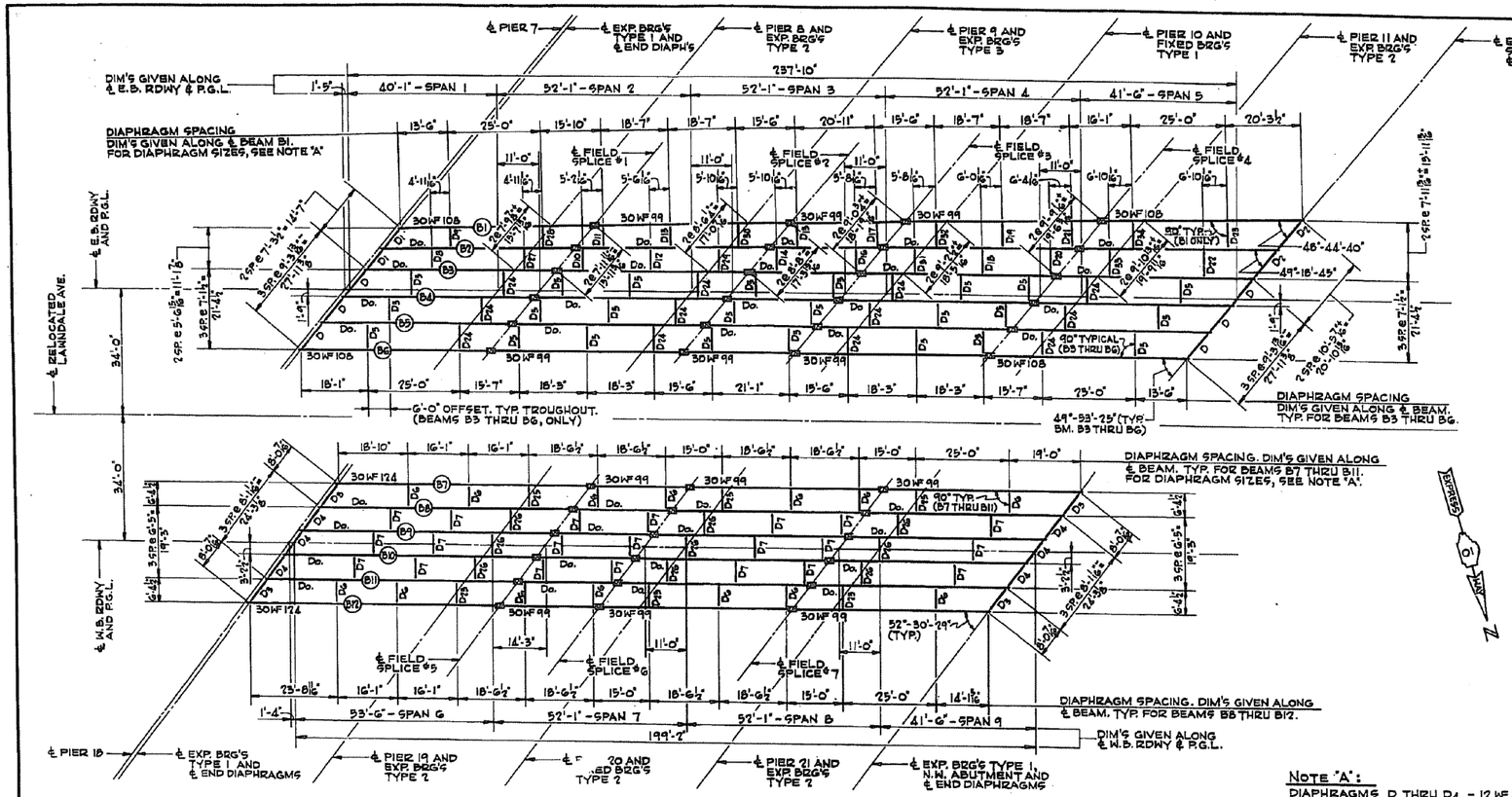

FRAMING PLAN

SCALE: 1/16" = 1'-0"

DIAPH.	LENGTH ℄ ℄	NO. REQ'D
D	9'-3 13/16"	6
D1	7'-3 1/2"	2
D2	10'-5 7/16"	2
D3	8'-0 7/16"	4
D4	8'-1 1/2"	6
D5	7'-1 1/2"	24
D6	6'-4 1/2"	14
D7	6'-5"	21
D8	5'-8 9/16"	1
D9	5'-7 13/16"	1
D10	6'-1 7/8"	1
D11	6'-0 15/16"	1
D12	6'-3 11/16"	1
D13	6'-3"	1
D14	6'-7 3/4"	1
D15	6'-7 1/8"	1
D16	6'-10 5/16"	1
D17	6'-9 9/16"	1
D18	7'-2 3/8"	1
D19	7'-1 5/8"	1
D20	7'-4 9/16"	1
D21	7'-3 13/16"	1
D22	7'-9 1/2"	1
D23	7'-8 3/4"	1
D24	7'-1 1/2"	12
D25	6'-4 1/2"	6
D26	6'-5"	9
D27	5'-11 9/16"	1
D28	5'-10 15/16"	1
D29	6'-5 7/8"	1
D30	6'-5 1/4"	1
D31	7'-0 3/16"	1
D32	6'-11 7/16"	1
D33	7'-6 1/2"	1
D34	7'-5 3/4"	1

TABLE I

** DIMENSION GIVEN IS ℄ TO ℄ OF BEAMS.

BEAM / DIM.	B1	B2	B3 THRU B6
"A"	242'-10 1/2"	240'-9 3/8"	238'-9"
"B"	40'-9 1/4"	40'-5 1/8"	40'-1"
"C"	52'-11 7/8"	52'-6 3/8"	52'-1"
"D"	52'-11 7/8"	52'-6 3/8"	52'-1"
"E"	52'-11 7/8"	52'-6 3/8"	52'-1"
"F"	42'-2 5/8"	41'-10 3/8"	41'-6"
"G"	11'-2 7/16"	11'-1 1/8"	11'-0"

TABLE II

NOTE "A":
DIAPHRAGMS D THRU D4 - 12 WF 40
DIAPHRAGMS D5 THRU D34 - 16 WF 36
FOR DIAPHRAGM LENGTHS, SEE "TABLE I"

NOTE:
FOR DIMENSIONS NOT GIVEN ON BEAM ELEVATIONS, SEE "TABLE II".

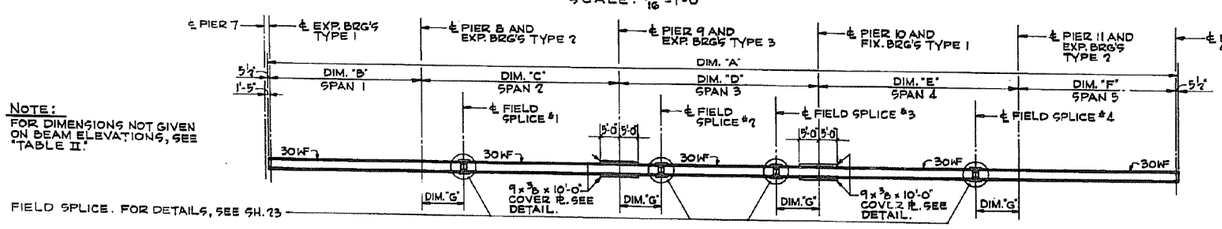

ELEVATION OF BEAMS B1 THRU B6 SCALE: 1/16" = 1'-0"

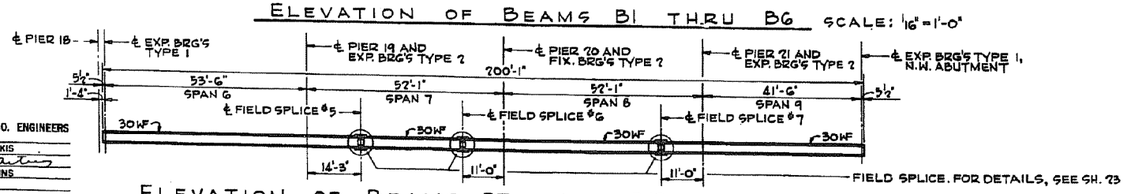

ELEVATION OF BEAMS B7 THRU B12 SCALE: 1/16" = 1'-0"

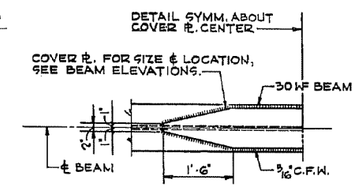

PLAN DETAIL OF COVER PL'S

TYPICAL - NOT TO SCALE

NOTES:
FOR STRUCTURAL STEEL DESIGNATION, SEE "GENERAL NOTES", SH. 3
FOR TABLES OF MOMENTS & REACTIONS, SEE SH. 23
FOR TABLE "TOP / WF ELEVATIONS", SEE SH. 23
FOR DIAPHRAGM DETAILS, SEE SH. 23

BILL OF MATERIAL *

ITEM	UNIT	QUANT'TY
FURNISHING AND ERECTING STRUCTURAL STEEL	POUND	337,955

* INCLUDES ALL STRUCTURAL STEEL SHOWN ON THIS SHEET AND SHEET 23.

ILLINOIS DIVISION OF HIGHWAYS
SOUTHWEST EXPRESSWAY

LAWNDALE AVE. OVER RAMP E

FRAMING PLAN

SCALE: AS NOTED | DATE 7-30-63

DE LEUW, CATHER & CO. ENGINEERS
DESIGNED BY J. C. BROZ
DRAWN BY J. A. CHALIKIS
CHECKED
IN CHARGE E. S. MARTINS
APPROVED L. N. RIAN

JOB NO. 1179

benesch
engineers · scientists · planners
Alfred Benesch & Company
205 North Michigan Avenue, Suite 2400
Chicago, Illinois 60601
312-565-0450 Job No. 10093

FOR INFORMATION ONLY

FILE NAME = 0160486_60J16_X26_exist_framing8_12.dgn	USER NAME = tjanicke	DESIGNED - FSM	REVISED -
		CHECKED - RMM	REVISED -
	PLOT SCALE =	DRAWN - FSM	REVISED -
	PLOT DATE = 6/23/2014	CHECKED - RMM	REVISED -

STATE OF ILLINOIS
DEPARTMENT OF TRANSPORTATION

EXISTING PLANS FRAMING PLAN SPANS 8 THRU 12
STRUCTURE NO. 016-0486

SHEET NO. SGX26 OF SGX48 SHEETS

F.A.P. RTE.	SECTION	COUNTY	TOTAL SHEETS	SHEET NO.
373	2013-038B-R	COOK	821	716
		CONTRACT NO. 60J16		
		ILLINOIS FED. AID PROJECT		

6/23/2014 2:57:15 PM X:\10000S\10093\Eng_Docs_Phase_II\SN_016_0486_60J16_X26_exist_Ave_over_Canal\Final_0486\0160486_60J16_X26_exist_framing8_12.dgn

FED. AID PROJECT NO.	SECT.	COUNTY	TOTAL SHEETS	SHEET NO.
133	0707-610HB	COOK	29	23
FED. ROAD DIST. NO. 7	ILLINOIS	FED. AID PROJECT		

SHEET NO. 23
SHEETS

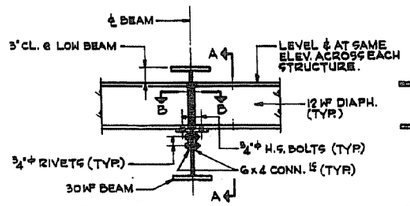

END DIAPHRAGM DETAIL

DIAPHRAGMS D THRU D24

FOR NO. REQ'D, SEE "TABLE I" SH. 22

SCALE: ¾" = 1'-0"

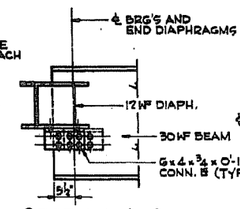

SECTION A-A

SCALE: ¾" = 1'-0"

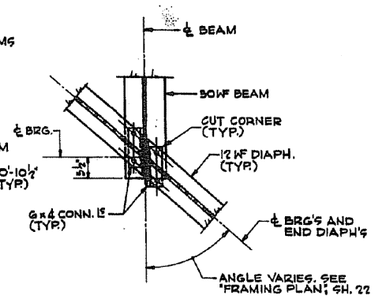

SECTION B-B

SCALE: ¾" = 1'-0"

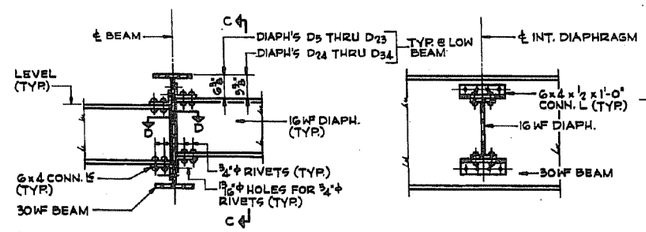

INTERMEDIATE DIAPHRAGM DETAIL

DIAPHRAGMS D5 THRU D34

FOR NO. REQ'D, SEE "TABLE I", SH. 22

SCALE: ¾" = 1'-0"

SECTION C-C

SCALE: ¾" = 1'-0"

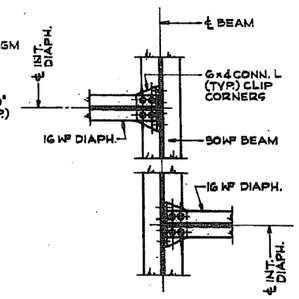

SECTION D-D

SCALE: ¾" = 1'-0"

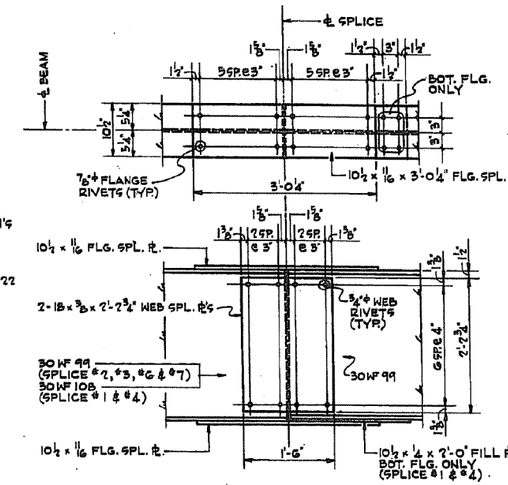

DETAIL - FIELD SPLICE #1 THRU #4, #6 & #7

SPLICES SIMILAR EXCEPT AS NOTED OTHERWISE

FIELD SPLICE #1, #2, #3, #6 & #7 - AS SHOWN

FIELD SPLICE #4 - OPPOSITE HAND

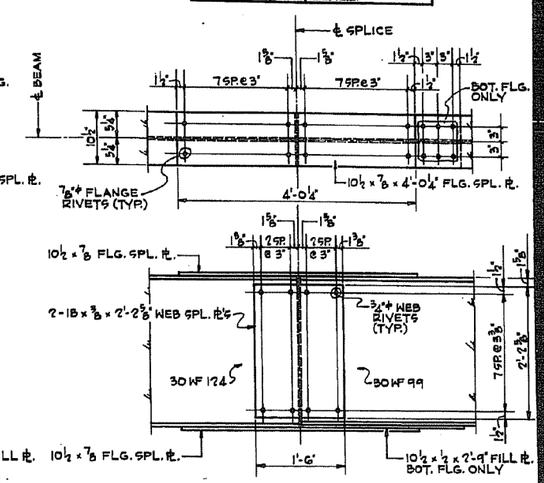

DETAIL - FIELD SPLICE #5

FIELD SPLICE DETAILS

SCALE: 1" = 1'-0"

TABLE OF MOMENTS & REACTIONS - TYP. INTERIOR BEAM - EAST BOUND ROADWAY

	MOMENTS (FT. KIPS)									REACTIONS (KIPS)					
	.4 SPAN 1	PIER 8	.5 SPAN 2	PIER 9	.5 SPAN 3	PIER 10	.5 SPAN 4	PIER 11	.6 SPAN 5	PIER 7	PIER 8	PIER 9	PIER 10	PIER 11	S.W. ABUT.
DEAD LOAD	95	-194	106	-212	92	-216	101	-202	107	13	47	48	48	47	14
LIVE LOAD	234	-202	261	-230	255	-238	254	-211	249	34	43	43	43	43	34
IMPACT	70	-59	74	-65	72	-67	71	-62	75	10	13	12	12	13	10
TOTAL	399	-455	441	-507	419	-521	426	-475	431	57	103	103	103	103	58

TABLE OF MOMENTS & REACTIONS - TYP. INTERIOR BEAM - WEST BOUND ROADWAY

	MOMENTS (FT. KIPS)							REACTIONS (KIPS)				
	.4 SPAN 6	PIER 19	.5 SPAN 7	PIER 20	.5 SPAN 8	PIER 21	.6 SPAN 9	PIER 18	PIER 19	PIER 20	PIER 21	N.W. ABUT.
DEAD LOAD	169	-255	73	-175	105	-190	100	18	51	42	45	13
LIVE LOAD	320	-233	236	-197	236	-187	223	33	40	39	39	31
IMPACT	90	-65	67	-55	67	-54	67	9	11	11	11	9
TOTAL	599	-553	376	-427	408	-431	390	60	102	92	95	53

TOP/WF ELEVATIONS*

LOCATION \ BEAM	B1	B2	B3	B4	B5	B6
E.B. ROADWAY: ℄ BRG'S, PIER 7	3.886	4.050	4.169	4.227	4.178	4.109
℄ PIER 8	3.738	3.903	4.021	4.080	4.030	3.961
℄ FIELD SPLICE #1	3.698	3.862	3.981	4.039	3.990	3.921
℄ PIER 9	3.546	3.711	3.830	3.888	3.839	3.770
℄ FIELD SPLICE #2	3.506	3.671	3.789	3.847	3.798	3.729
℄ FIELD SPLICE #3	3.395	3.560	3.678	3.737	3.687	3.618
℄ PIER 10	3.355	3.519	3.638	3.696	3.647	3.578
℄ FIELD SPLICE #4	3.204	3.368	3.487	3.545	3.496	3.427
℄ PIER 11	3.163	3.328	3.446	3.504	3.455	3.386
℄ BRG'S, S.W. ABUT.	3.010	3.175	3.293	3.352	3.303	3.233

LOCATION \ BEAM	B7	B8	B9	B10	B11	B12
℄ BRG'S, PIER 18	4.056	4.158	4.260	4.259	4.213	4.147
℄ PIER 19	3.860	3.961	4.044	4.062	4.016	3.950
℄ FIELD SPLICE #5	3.807	3.909	3.991	4.009	3.963	3.897
℄ FIELD SPLICE #6	3.708	3.810	3.892	3.911	3.865	3.799
℄ PIER 20	3.668	3.770	3.852	3.870	3.824	3.758
℄ FIELD SPLICE #7	3.517	3.618	3.701	3.719	3.673	3.607
℄ PIER 21	3.476	3.578	3.660	3.678	3.632	3.567
℄ BRG'S, N.E. ABUT.	3.374	3.425	3.508	3.526	3.480	3.414

* ADD 620.000 TO ALL TOP/WF ELEVATIONS GIVEN.

NOTE:
FOR "BILL OF MATERIAL", SEE SH. 22

DE LEUW, CATHER & CO. ENGINEERS
DESIGNED BY J.C. BROZ
DRAWN BY J.A. CHALIKIS
CHECKED
IN CHARGE R.S. MARTINS
APPROVED L.N. RIAN

JOB NO. 1179

ILLINOIS DIVISION OF HIGHWAYS
SOUTHWEST EXPRESSWAY
LAWNDALE AVE. OVER RAMP E
STEEL DETAILS AND ELEVATIONS
SCALE: AS NOTED
DATE 7-30-63

X:\100005\10093\Eng_Docs_Phase_II\SN_016_0486_0487_1st_Ave_over_Canal\Final\0486_60J16_X27_exist_steeldet.dgn 2:57:39 PM 6/23/2014

benesch
engineers · scientists · planners
Alfred Benesch & Company
205 North Michigan Avenue, Suite 2400
Chicago, Illinois 60601
312-565-0450 Job No. 10093

FOR INFORMATION ONLY

FILE NAME = 0160486_60J16_X27_exist_steeldet.dgn	USER NAME = tjanicke	DESIGNED - FSM	REVISED -	STATE OF ILLINOIS DEPARTMENT OF TRANSPORTATION	EXISTING PLANS STEEL DETAILS STRUCTURE NO. 016-0486	F.A.P. RTE. 373	SECTION 2013-038B-R	COUNTY COOK	TOTAL SHEETS 821	SHEET NO. 717
		CHECKED - RMM	REVISED -					CONTRACT NO. 60J16		
	PLOT SCALE =	DRAWN - FSM	REVISED -							
	PLOT DATE = 6/23/2014	CHECKED - RMM	REVISED -		SHEET NO. SGX27 OF SGX48 SHEETS		ILLINOIS FED. AID PROJECT			

FED. RTE.	SEC.	COUNTY	TOTAL SHEETS	SHEET NO.
133	0707-210 HD	COOK	29	25

SHEET NO. 25 SHEETS

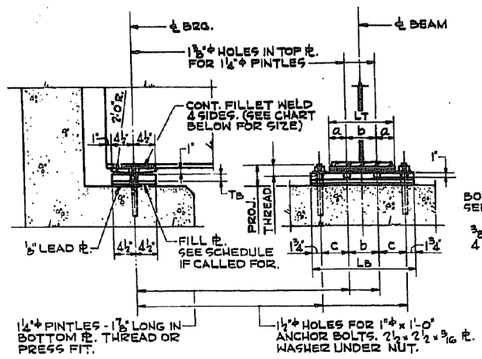

TYPE	NO. REQ'D	LT	LB	C.F.W.	TB	a	b	c	TOTAL WEIGHT*
	NONE								

FIXED BEARINGS AT ABUTMENTS

SCALE: 1"=1'-0"

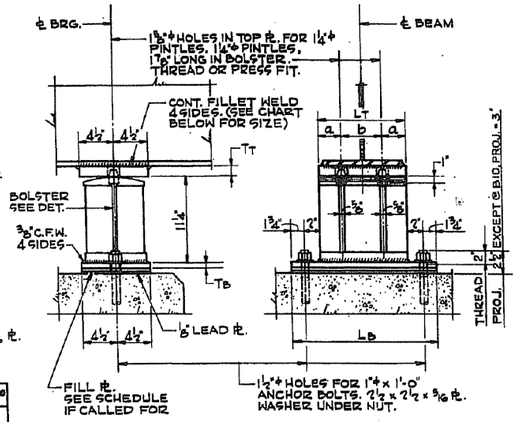

TYPE	NO. REQ'D	LT	LB	TT	TB	a	b	C.F.W.	TOTAL WEIGHT*
F2	6	11½"	1'-7"	1⅜"	3¼"	3"	5½"	½"	231 LBS.

FIXED BEARINGS AT PIER 20

BEAM WITHOUT COVER PLATES

SCALE: 1½"=1'-0"

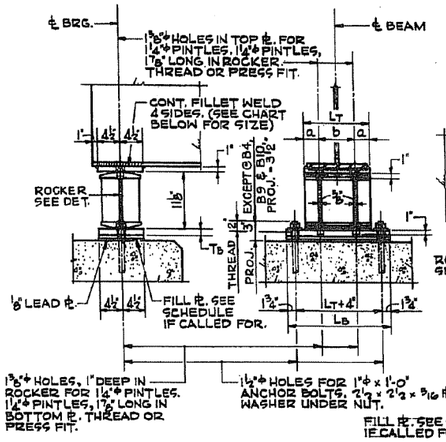

TYPE	NO. REQ'D	LT	LB	C.F.W.	TB	a	b	TOTAL WEIGHT*
E1	24	11½"	1'-7"	⅜"	1⅜"	3"	5½"	250 LBS.

EXPANSION BEARINGS AT ABUTMENTS AND AT PIERS 7 & 18

SCALE: 1"=1'-0"

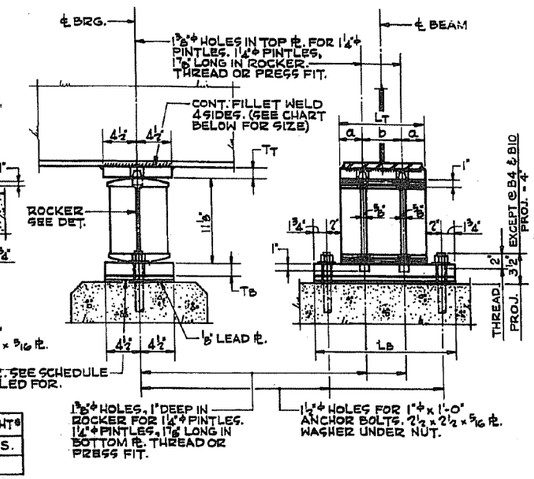

TYPE	NO. REQ'D	LT	LB	TT	TB	a	b	C.F.W.	TOTAL WEIGHT*
E2	24	11½"	1'-7"	1⅜"	1¾"	3"	5½"	½"	280 LBS.

EXPANSION BEARINGS AT PIERS 8, 11, 19 & 21

BEAM WITHOUT COVER PLATES

SCALE: 1½"=1'-0"

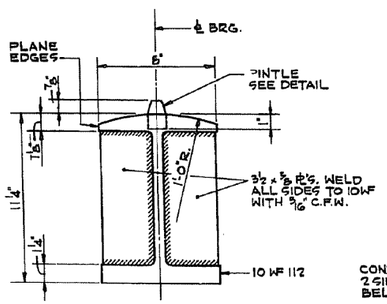

BOLSTER DETAIL

SCALE: 3"=1'-0"

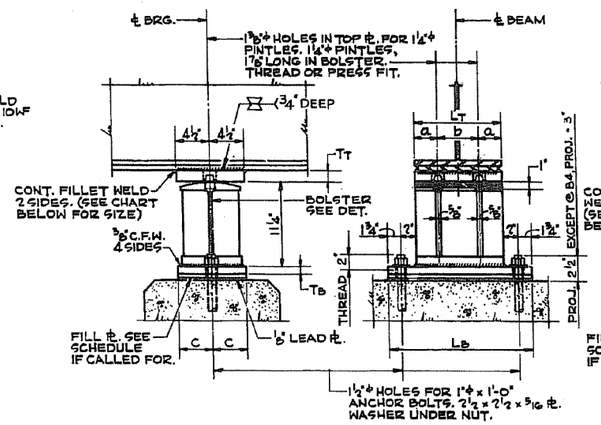

TYPE	NO. REQ'D	LT	LB	TT	TB	a	b	c	C.F.W.	TOTAL WEIGHT*
F1	6	10½"	1'-6"	1"	3¼"	2½"	5½"	4½"	½"	207 LBS.

FIXED BEARINGS AT PIER 10

BEAM WITH COVER PLATES

SCALE: 1½"=1'-0"

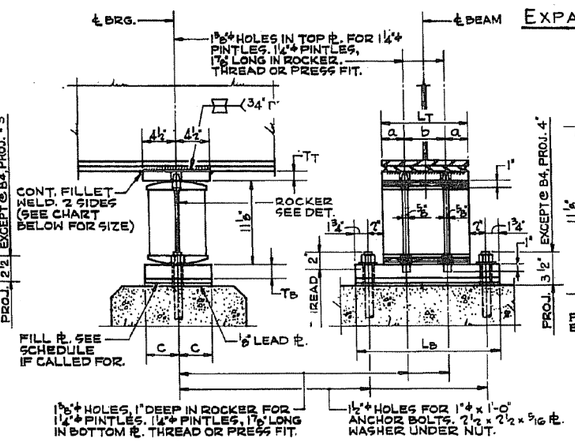

TYPE	NO. REQ'D	LT	LB	TT	TB	a	b	c	C.F.W.	TOTAL WEIGHT*
E3	6	10½"	1'-6"	1"	1¾"	2½"	5½"	4½"	½"	253 LBS.

EXPANSION BEARINGS AT PIER 9

BEAM WITH COVER PLATES

SCALE: 1½"=1'-0"

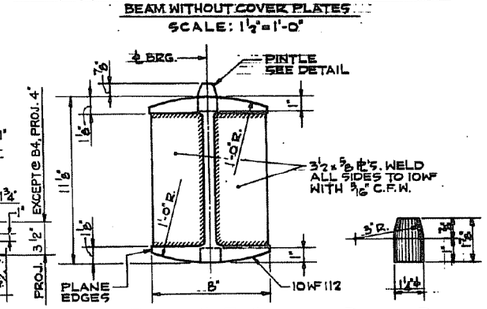

ROCKER DETAIL

SCALE: 3"=1'-0"

PINTLE DETAIL

NOT TO SCALE

FILL PL SCHEDULE		
LOCATION	BEAM	FILL PL THICKNESS
E.B. ROADWAY, ALL SUPPORTS	B4	3/4"
	B5	1/8"
W.B. ROADWAY, ALL SUPPORTS	B9	5/16"
	B10	1/2"

TOTAL WEIGHT OF FILL PL'S = 455 LBS.

BILL OF MATERIAL		
ITEM	UNIT	QUANTITY
FURNISHING AND ERECTING STRUCTURAL STEEL	POUND	17,321

DE LEUW, CATHER & CO. ENGINEERS
DESIGNED BY J.C. BROZ
DRAWN BY J.A. CHALKIS
CHECKED
IN CHARGE E.S. MARTINS
APPROVED L.N. RIAN

* TOTAL WEIGHT OF ONE ASSEMBLY INCLUDES TOP PL, ROCKER OR BOLSTER, BOTTOM PL, ANCHOR BOLTS, PL WASHERS AND LEAD PL. DOES NOT INCLUDE THE WEIGHT OF ANY FILL PL.

JOB NO. 1179

ILLINOIS DIVISION OF HIGHWAYS
SOUTHWEST EXPRESSWAY
LAWNDALE AVE. OVER RAMP E
BEARING DETAILS

SCALE: AS NOTED | DATE

benesch
engineers · scientists · planners
Alfred Benesch & Company
205 North Michigan Avenue, Suite 2400
Chicago, Illinois 60601
312-565-0450 Job No. 10093

FOR INFORMATION ONLY

FILE NAME = 0160486_60J16_X28_exist_brgdet.dgn	USER NAME = tjanicke	DESIGNED - FSM	REVISED -
		CHECKED - RMM	REVISED -
	PLOT SCALE =	DRAWN - FSM	REVISED -
	PLOT DATE = 6/23/2014	CHECKED - RMM	REVISED -

STATE OF ILLINOIS
DEPARTMENT OF TRANSPORTATION

EXISTING PLANS BEARING DETAILS
STRUCTURE NO. 016-0486
SHEET NO. SGX28 OF SGX48 SHEETS

F.A.P. RTE.	SECTION	COUNTY	TOTAL SHEETS	SHEET NO.
373	2013-038B-R	COOK	821	718
		CONTRACT NO. 60J16		
	ILLINOIS FED. AID PROJECT			

6/23/2014 2:58:04 PM X:\100005\10093\Eng_Docs_Phase_II\SN_016_0486_0487_1st_Ave_over_Canal\Final_0486\0160486_60J16_X28_exist_brgdet.dgn

F.A. RTE.	SECTION	EXPRESSWAYS	TOTAL SHEETS	SHEET NO.
133	07C7-626B	SOUTHWEST	93	68
STA.		TO STA.		
FED. ROAD DIST. NO. 7	ILLINOIS	FED. AID PROJECT		

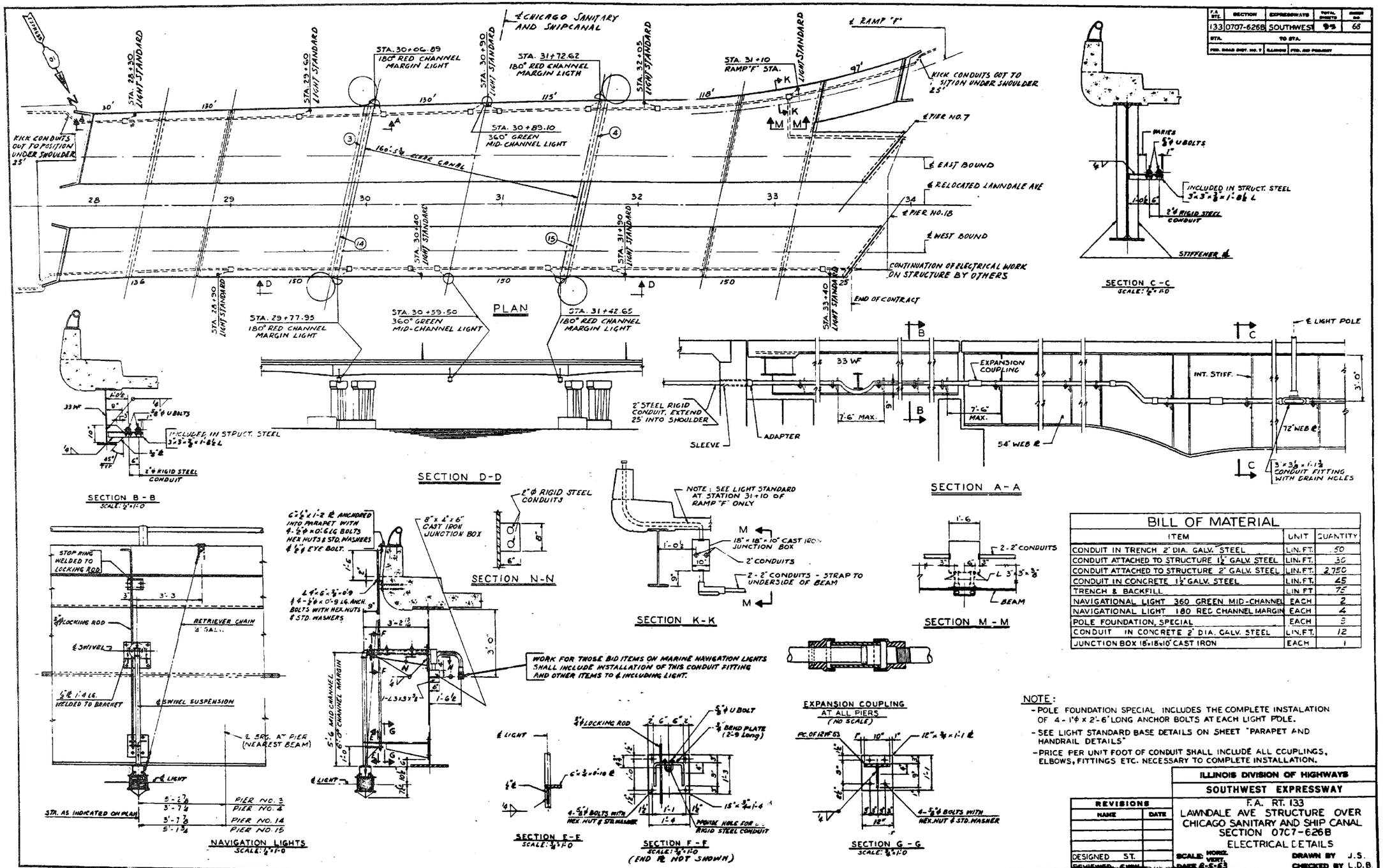

BILL OF MATERIAL

ITEM	UNIT	QUANTITY
CONDUIT IN TRENCH 2" DIA. GALV. STEEL	LIN. FT.	50
CONDUIT ATTACHED TO STRUCTURE 1½" GALV. STEEL	LIN. FT.	30
CONDUIT ATTACHED TO STRUCTURE 2" GALV. STEEL	LIN. FT.	2750
CONDUIT IN CONCRETE 1½" GALV. STEEL	LIN. FT.	45
TRENCH & BACKFILL	LIN. FT	75
NAVIGATIONAL LIGHT 360 GREEN MID-CHANNEL	EACH	2
NAVIGATIONAL LIGHT 180 RED CHANNEL MARGIN	EACH	4
POLE FOUNDATION, SPECIAL	EACH	3
CONDUIT IN CONCRETE 2" DIA. GALV. STEEL	LIN. FT.	12
JUNCTION BOX 18"x18"x10" CAST IRON	EACH	1

NOTE:

- POLE FOUNDATION SPECIAL INCLUDES THE COMPLETE INSTALATION OF 4 - 1"φ x 2'-6" LONG ANCHOR BOLTS AT EACH LIGHT POLE.
- SEE LIGHT STANDARD BASE DETAILS ON SHEET "PARAPET AND HANDRAIL DETAILS"
- PRICE PER UNIT FOOT OF CONDUIT SHALL INCLUDE ALL COUPLINGS, ELBOWS, FITTINGS ETC. NECESSARY TO COMPLETE INSTALLATION.

REVISIONS	
NAME	DATE
DESIGNED S.T.	
DRAWN	

ILLINOIS DIVISION OF HIGHWAYS
SOUTHWEST EXPRESSWAY
F.A. RT. 133
LAWNDALE AVE STRUCTURE OVER CHICAGO SANITARY AND SHIP CANAL
SECTION 07C7-626B
ELECTRICAL DETAILS
SCALE: HORIZ. VERT.
DATE 8-5-03
DRAWN BY J.S.
CHECKED BY L.D.B.

benesch
engineers · scientists · planners
Alfred Benesch & Company
205 North Michigan Avenue, Suite 2400
Chicago, Illinois 60601
312-565-0450 Job No. 10093

FOR INFORMATION ONLY

FILE NAME =	USER NAME = tjanicke	DESIGNED - FSM	REVISED -
		CHECKED - RMM	REVISED -
0160486.60J16.X29.exist.elecdet.dgn	PLOT SCALE =	DRAWN - FSM	REVISED -
	PLOT DATE = 6/23/2014	CHECKED - RMM	REVISED -

STATE OF ILLINOIS
DEPARTMENT OF TRANSPORTATION

EXISTING PLANS ELECTRICAL DETAILS
STRUCTURE NO. 016-0486
SHEET NO. SGX29 OF SGX48 SHEETS

F.A.P. RTE.	SECTION	COUNTY	TOTAL SHEETS	SHEET NO.
373	2013-038B-R	COOK	821	719
		CONTRACT NO. 60J16		
		ILLINOIS FED. AID PROJECT		

6/23/2014 2:58:29 PM X:\10000S\10093\Eng_Docs_Phase_II\SN_016_0486_0487_1st_Ave_over_Canal\Final_0486\0160486_60J16_X29_exist_elecdet.dgn

FED. RTE. NUMBER	SEC.	SHEET	TOTAL SHEETS	SHEET NO.
1188	07107-01 HB	COOK	29	27
FED. ROAD DIST. NO. 1	ILLINOIS	FED. AID PROJECT		

SHEET NO. 27
SHEETS

NOTE: ANCHOR BOLTS ARE BILLED ON SHEET NO. 26

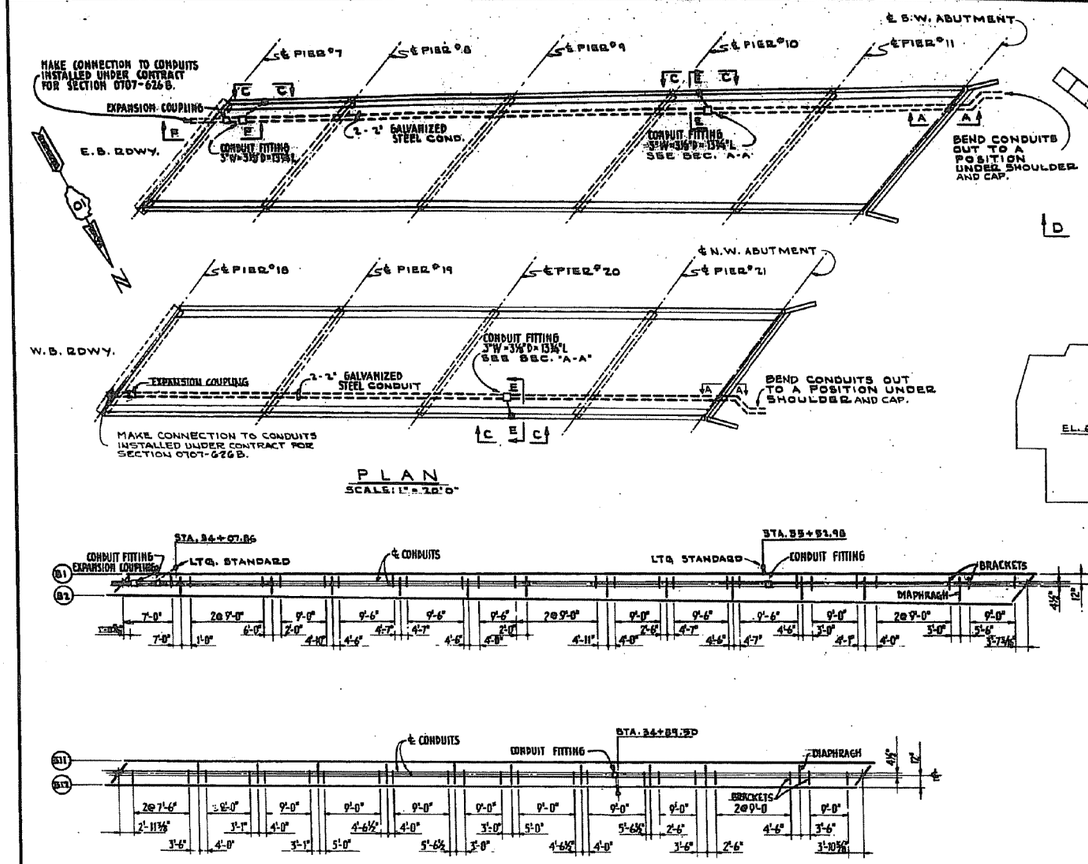

PLAN
SCALE: 1" = 20'-0"

BRACKET LOCATIONS
SCALE: 1/16" = 1'-0"

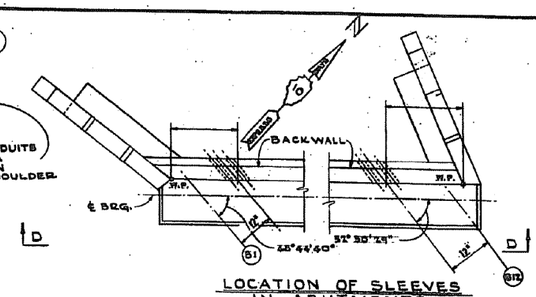

LOCATION OF SLEEVES IN ABUTMENTS

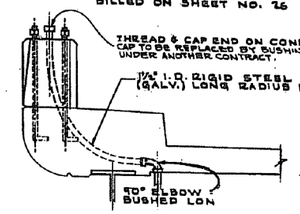

SECTION "B-B"
SCALE: 3/4" = 1'-0"

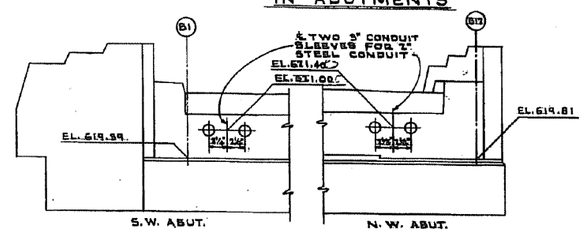

ELEVATION "D-D"

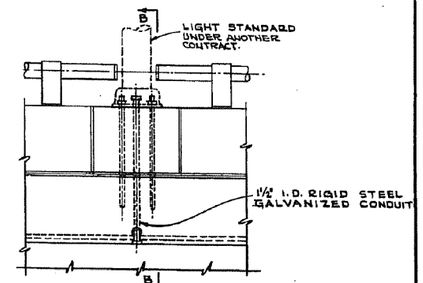

SECTION "C-C"
SCALE: 3/4" = 1'-0"

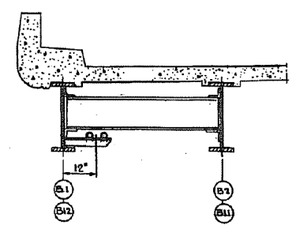

SECTION "E-E"

BILL OF MATERIAL

ITEM	UNIT	QUANTITY
CONDUIT IN TRENCH, 2" DIA. GALVANIZED STEEL	LIN. FT.	40
CONDUIT MOUNTED, 2" DIA. GALVANIZED STEEL	LIN. FT.	934
CONDUIT IN CONCRETE, 1½" DIA. GALVANIZED STEEL	LIN. FT.	23
CONDUIT 1½" DIA. GALVANIZED STEEL	LIN. FT.	6
TRENCH AND BACKFILL	LIN. FT.	20

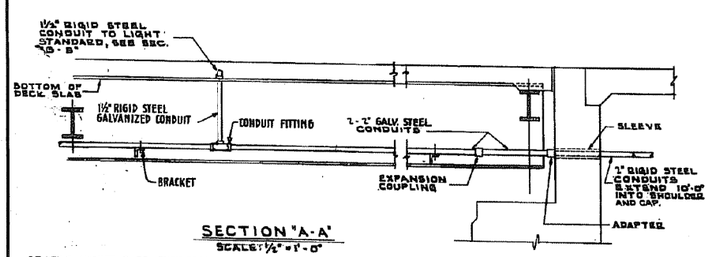

SECTION "A-A"
SCALE: 1/2" = 1'-0"

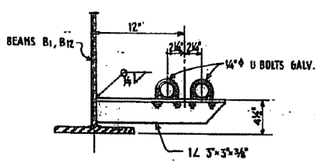

BRACKET DETAIL
SCALE: 1½" = 1'-0"

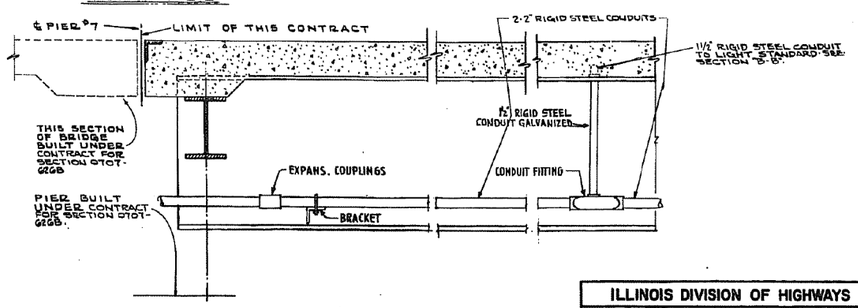

SECTION "F-F"
SCALE: 1" = 1'-0"

DE LEUW, CATHER & CO. ENGINEERS
DESIGNED BY G.R.F.
DRAWN BY G.R.F.
CHECKED E.H.
IN CHARGE E.S. MARTINS
APPROVED L.N. RIAN

JOB NO. 1179

ILLINOIS DIVISION OF HIGHWAYS
SOUTHWEST EXPRESSWAY
LAWNDALE AVE. OVER RAMP E
ELECTRICAL DETAILS
SCALE: AS NOTED
DATE 7-30-03

benesch
engineers · scientists · planners
Alfred Benesch & Company
205 North Michigan Avenue, Suite 2400
Chicago, Illinois 60601
312-565-0450 Job No. 10093

FOR INFORMATION ONLY

FILE NAME =	USER NAME = tjanicke	DESIGNED - FSM	REVISED -	STATE OF ILLINOIS DEPARTMENT OF TRANSPORTATION	EXISTING PLANS ELECTRICAL DETAILS STRUCTURE NO. 016-0486	F.A.P. RTE.	SECTION	COUNTY	TOTAL SHEETS	SHEET NO.
		CHECKED - RMM	REVISED -			373	2013-038B-R	COOK	821	720
0160486_60J16_X30_exist_elecdet.dgn	PLOT SCALE =	DRAWN - FSM	REVISED -					CONTRACT NO. 60J16		
	PLOT DATE = 6/23/2014	CHECKED - RMM	REVISED -		SHEET NO. SGX30 OF SGX48 SHEETS			ILLINOIS FED. AID PROJECT		

6/23/2014 2:58:31 PM X:\10000S\10093\Eng_Docs_Phase_II\SN_016_0486_0487_1st_Ave_over_Canal\Final\0486\0160486_60J16_X30_exist_elecdet.dgn

ROUTE NO.	SECTION	COUNTY	TOTAL SHEETS	SHEET NO.
IL 171	**	COOK	363	254
		ILLINOIS	FED. AID PROJECT	

SHEET 1 OF 52

** SECTION 0707-626 B (BR)

EXIST DUAL STRUCTURES (016-0486 & 016-0487)
BASE LINE STA. 30+72.59 BUILT 1964, 7" CONC. SLAB
S.N 016-0486 12 SPANS W/ RAMP, S.N. 016-0487 11 SPANS
WF BEAM & WELDED PLATE GIRDER BRIDGES, O.-O. DECK VARIES
SUPPORTED BY COLUMN CONC PIERS ON SPREAD FOOTINGS
SPILL THRU ABUTS W/ STL PILES.

TRAFFIC SHALL BE MAINTAINED UTILIZING STAGE CONSTRUCTION.

PLAN DIMENSIONS AND DETAILS RELATIVE TO EXISTING STRUCTURE HAVE BEEN TAKEN FROM EXISTING PLANS AND ARE SUBJECT TO NOMINAL CONSTRUCTION VARIATIONS. IT SHALL BE THE CONTRACTOR'S RESPONSIBILITY TO VERIFY SUCH DIMENSIONS AND DETAILS IN THE FIELD AND MAKE NECESSARY APPROVED ADJUSTMENTS PRIOR TO CONSTRUCTION OR ORDERING OF MATERIALS. SUCH VARIATIONS SHALL NOT BE CAUSE FOR ADDITIONAL COMPENSATION FOR A CHANGE IN THE SCOPE OF THE WORK. HOWEVER, THE CONTRACTOR WILL BE PAID FOR THE QUANTITY ACTUALLY FURNISHED AT THE UNIT PRICE BID FOR THE WORK.

SEE SHEET 2 OF 52 FOR TYPICAL EXIST. DECK CROSS SECTIONS.

REINFORCEMENT BARS SHALL CONFORM TO THE REQUIREMENTS OF AASHTO M-31 M-42 OR M-53 GRADE 60.

ANY REINFORCEMENT BARS THAT ARE DAMAGED DURING CONCRETE REMOVAL SHALL BE REPLACED WITH AN APPROVED BAR SPLICER OR ANCHORAGE SYSTEM. COST INCIDENTAL TO "CONCRETE REMOVAL".

ALL NEW STRUCTURAL STEEL SHALL CONFORM TO AASHTO CLASSIFICATION M-270 GR. 36

THE ZINC-SILICATE AND VINYL PAINT SYSTEM SHALL BE USED FOR SHOP AND FIELD PAINTING OF STRUCTURAL STEEL EXCEPT WHERE OTHERWISE NOTED. THE COLOR OF THE VINYL FINISH COAT SHALL BE MUNSELL NO. 10YR 7/1 (LIGHT GREY).

PRIOR TO POURING THE NEW CONCRETE FOR THE DECK, ALL LOOSE RUST, LOOSE MILL SCALE, AND ALL OTHER LOOSE DETRIMENTAL FOREIGN MATERIAL SHALL BE REMOVED FROM THE EMBEDDED PORTION OF FLANGES OF GIRDERS. THE REMOVAL SHALL BE ACCOMPLISHED IN ACCCORDANCE WITH THE REQUIREMENTS OF THE SSPC SURFACE PREPARATION SPECIFICATIONS SP-3 FOR POWER TOOL CLEANING OR SP-2 FOR HAND TOOL CLEANING. COST SHALL BE INCIDENTAL TO CONCRETE REMOVAL.

BRIDGE SEAT SEALER SHALL BE APPLIED TO THE SEAT AREA OF THE ABUTMENTS, AND PIERS 2,5,7,13,16,18 AND WEST ABUTMENT RAMP F.

THE STRUCTURAL STEEL BEARING PLATES OF THE ELASTOMERIC BEARING ASSEMBLY SHALL CONFORM TO THE REQUIREMENTS OF AASHTO M270 GRADE 50.

BRIDGE DECK MICROSILICA CONCRETE OVERLAY (SPECIAL) AND CONCRETE BRIDGE DECK SURFACE REMOVAL (METHOD 3) SHALL BE PERFORMED IN ACCORDANCE WITH "SPECIAL PROVISION FOR BRIDGE DECK OVERLAY (EFFECTIVE OCTOBER 1, 1983; REVISED OCTOBER 2, 1991)", EXCEPT AS MODIFIED BY "SPECIAL PROVISION FOR BRIDGE DECK OVERLAY (SPECIAL)".

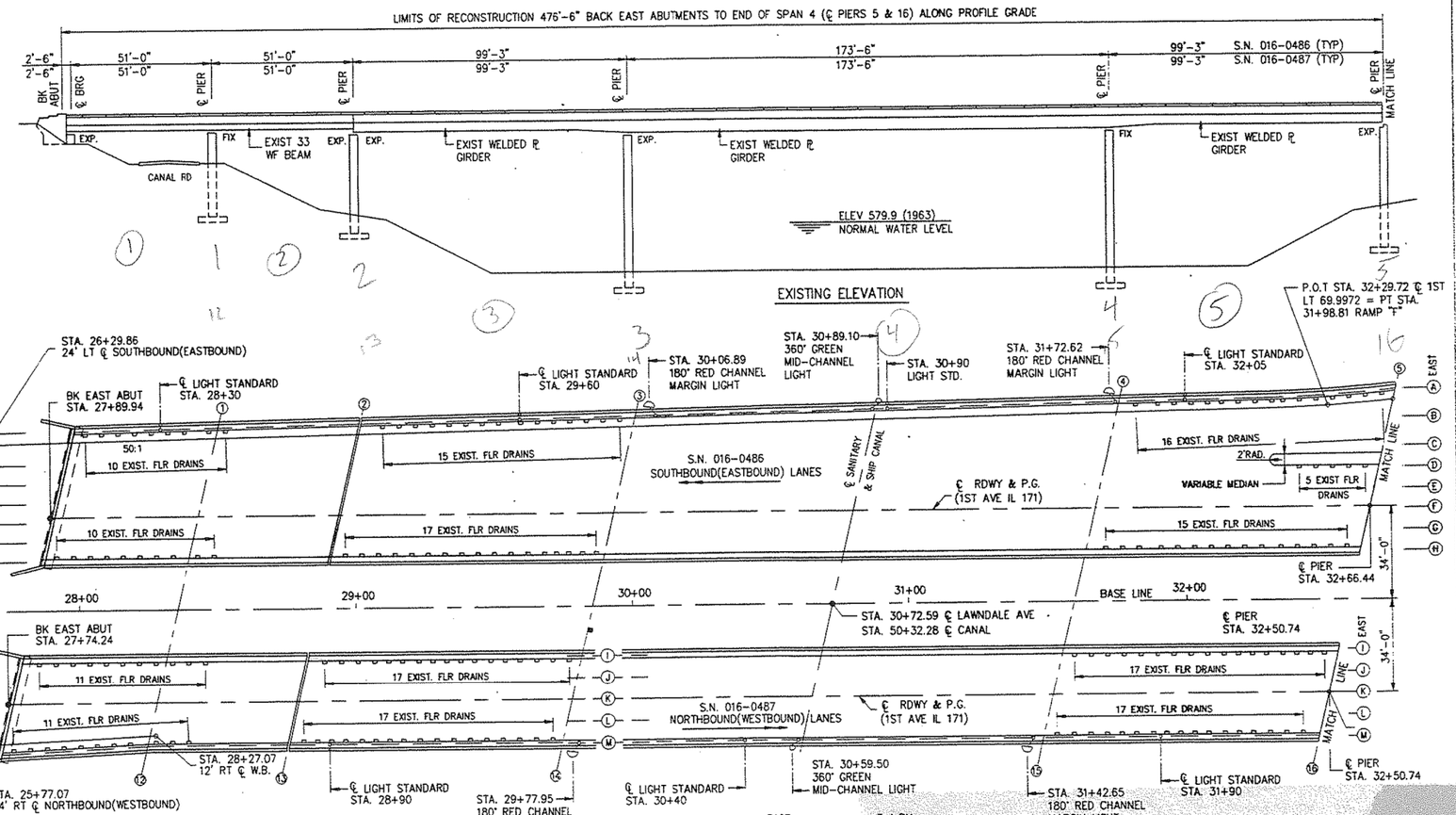

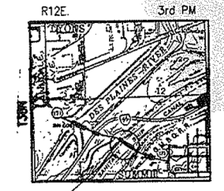

LOCATION SKETCH

N

DUANE L. STEGEMEIER
4700
REGISTERED STRUCTURAL ENGINEER
12-3-93
STATE OF ILLINOIS
EXPIRES 11/30/94
ILLINOIS S.E. 4700
EXPIRES 11-30-94

1993

EXAMINED

ENGINEER OF STRUCTURAL SERVICES

PASSED

ENGINEER OF BRIDGE AND STRUCTURES

APPROVED

DIRECTOR OF HIGHWAYS

ILLINOIS DEPARTMENT OF TRANSPORTATION

GENERAL PLAN & ELEVATION
(EAST SPANS)

BRIDGE REPAIRS
1ST AVE (IL 171) S.N. 016-0486 & 016-0487
OVER CHICAGO SANITARY & SHIP CANAL

F.A.U. RT. 1505 SECTION 0707-626 B (BR)
COOK CO. IL
STA. 30+72.59

11/30/93 03:42:54 P.M. 4864B7E.DWG

X:\10000S\10093\Eng_Docs_Phase_II\SN_016_0486_0487_1st_Ave_over_Canal\Final\0486_60J16_X31_exist_93_GPE.dgn 6/23/2014 2:58:58 PM

benesch
engineers · scientists · planners

Alfred Benesch & Company
205 North Michigan Avenue, Suite 2400
Chicago, Illinois 60601
312-565-0450 Job No. 10093

FOR INFORMATION ONLY

FILE NAME =	USER NAME = tjanicke	DESIGNED - FSM	REVISED -	STATE OF ILLINOIS DEPARTMENT OF TRANSPORTATION	EXISTING PLANS (1993) - GPE STRUCTURE NO. 016-0486	F.A.P. RTE.	SECTION	COUNTY	TOTAL SHEETS	SHEET NO.
		CHECKED - RMM	REVISED -			373	2013-038B-R	COOK	821	721
0160486_60J16_X31_exist_93_GPE.dgn	PLOT SCALE =	DRAWN - FSM	REVISED -			CONTRACT NO. 60J16				
	PLOT DATE = 6/23/2014	CHECKED - RMM	REVISED -		SHEET NO. SGX31 OF SGX48 SHEETS	ILLINOIS FED. AID PROJECT				

SHEET 2 OF 52

ROUTE NO.	SECTION	COUNTY	TOTAL SHEETS	SHEET NO.
IL 171	**	COOK	383	255
		ILLINOIS	FED. AID PROJECT	

** SECTION 0707-626 B (BR)

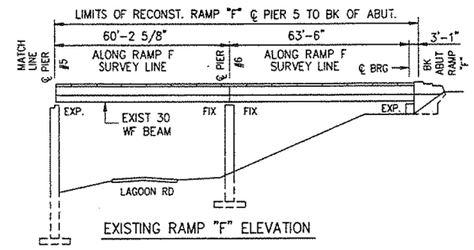

EXISTING RAMP "F" ELEVATION

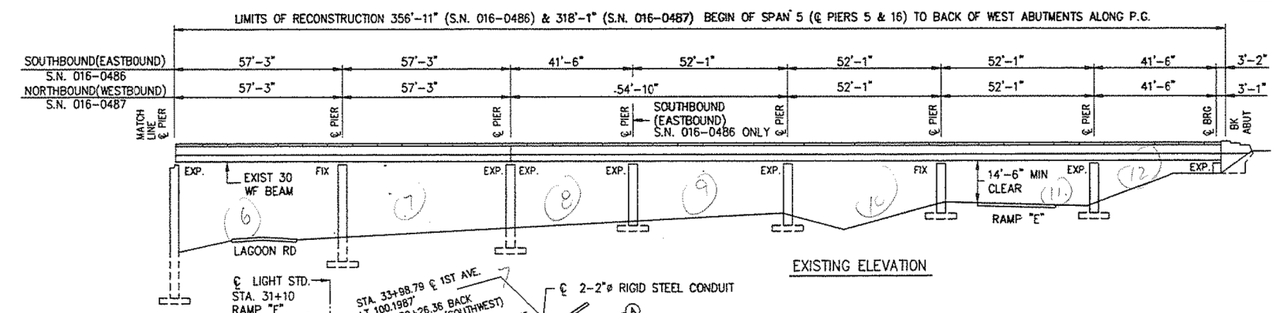

EXISTING ELEVATION

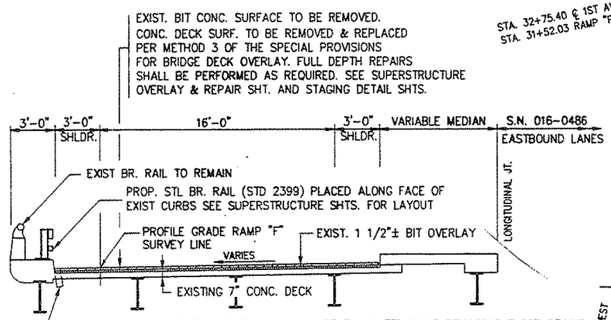

TYPICAL DECK SECTION – RAMP "F" STRUCTURE
LOOKING DOWNSTATION ALONG RAMP "F" PROFILE GRADE

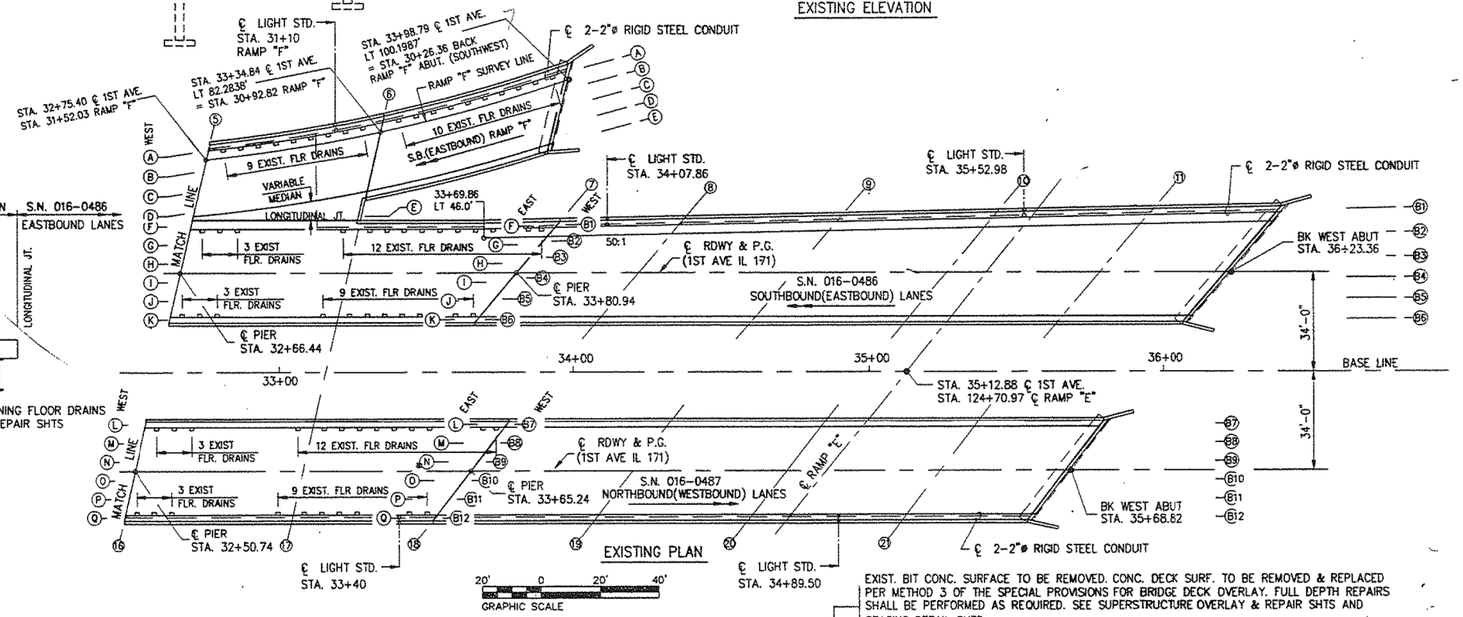

EXISTING PLAN

NOTE (A) S.N. 016-0486 S.B.(EASTBOUND) LANES

VARIES AS FOLLOWS
27'-4"± AT EAST ABUTMENT
29'-5"± AT PIER 2
38'-9 5/8"± AT PIER 5 (EAST) RAMP "F" APPROACH
12'-0" AT PIER 5 (WEST)
12'-0" AT STA. 33+69.86
12'-6"± AT PIER 7
17'-5"± AT WEST ABUTMENT

NOTE (B) S.N. 016-0487 N.B.(WESTBOUND) LANES

VARIES FROM 14'-7"± AT BK OF EAST ABUT. TO 12'-0" AT STA. 28+27.07 AND REMAINS 12'-0" TO THE BK OF WEST ABUT.

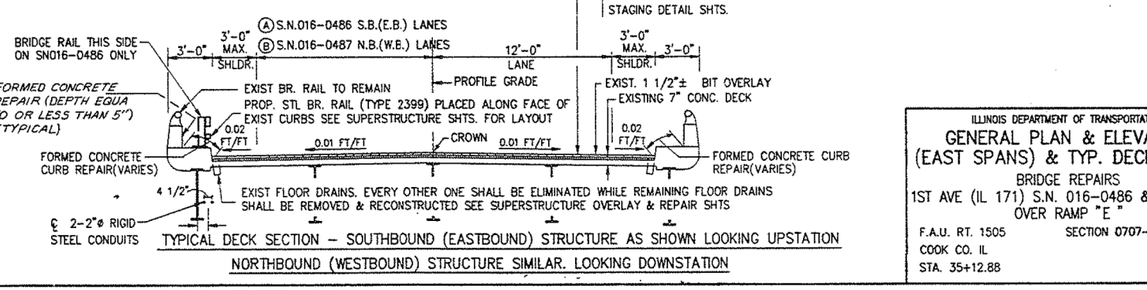

TYPICAL DECK SECTION – SOUTHBOUND (EASTBOUND) STRUCTURE AS SHOWN LOOKING UPSTATION
NORTHBOUND (WESTBOUND) STRUCTURE SIMILAR. LOOKING DOWNSTATION

1993

EXAMINED

ENGINEER OF STRUCTURAL SERVICES

PASSED

ENGINEER OF BRIDGE AND STRUCTURES

APPROVED

DIRECTOR OF HIGHWAYS

ILLINOIS DEPARTMENT OF TRANSPORTATION

GENERAL PLAN & ELEVATION (EAST SPANS) & TYP. DECK SECTS.

BRIDGE REPAIRS
1ST AVE (IL 171) S.N. 016-0486 & 016-0487
OVER RAMP "E"

F.A.U. RT. 1505 SECTION 0707-626 B (BR)
COOK CO. IL
STA. 35+12.88

11/20/93 03:42:54 P.M. 4864879.DWG

X:\100005\10093\Eng_Docs_Phase_II\SN_016_0486_0487_1st_Ave_over_Canal\Final\0486\0160486_60J16_X32_exist_93_GPE.dgn 6/23/2014 2:59:08 PM

benesch engineers · scientists · planners

Alfred Benesch & Company
205 North Michigan Avenue, Suite 2400
Chicago, Illinois 60601
312-565-0450 Job No. 10093

FOR INFORMATION ONLY

FILE NAME = 0160486_60J16_X32_exist_93_GPE.dgn	USER NAME = tjenicke	DESIGNED - FSM	REVISED -
		CHECKED - RMM	REVISED -
	PLOT SCALE =	DRAWN - FSM	REVISED -
	PLOT DATE = 6/23/2014	CHECKED - RMM	REVISED -

STATE OF ILLINOIS
DEPARTMENT OF TRANSPORTATION

EXISTING PLANS (1993) – GPE
STRUCTURE NO. 016-0486
SHEET NO. SGX32 OF SGX48 SHEETS

F.A.P. RTE.	SECTION	COUNTY	TOTAL SHEETS	SHEET NO.
373	2013-038B-R	COOK	821	722
		CONTRACT NO. 60J16		
		ILLINOIS FED. AID PROJECT		

ROUTE NO.	SECTION	COUNTY	TOTAL SHEETS	SHEET NO.
IL 171	**	COOK	383	256
		ILLINOIS	FED. AID PROJECT	

** SECTION 0707-626 B (BR)

TOTAL BILL OF MATERIALS

ITEM	UNIT	TOTAL
STEEL BRIDGE RAIL	LIN FT	568
REINFORCEMENT BARS EPOXY COATED	POUNDS	14600
DECK SLAB REPAIR (FULL DEPTH, TYPE I)	SQ YD	156
BRIDGE DECK MICROSILICA CONCRETE OVERLAY (SPECIAL)	SQ YD	6688
JACK AND REMOVE EXIST BEARINGS	EACH	122
CONCRETE REMOVAL	CU YD	90
CLASS X CONCRETE SUPERSTRUCTURE	CU YD	93
FURNISHING & ERECTING STRUCTURAL STEEL	POUNDS	29160
BITUMINOUS CONCRETE SURFACE REMOVAL (ASBESTOS)	SQ YD	6998
BAR SPLICERS	EACH	184
EPOXY CRACK SEALING	LIN FT	86
FORMED CONCRETE REPAIR (DEPTH EQUAL TO OR LESS THAN 5")	SQ FT	2977 ***
CONCRETE BRIDGE DECK SURFACE REMOVAL (METHOD 3)	SQ YD	6688
ELASTOMERIC BEARING ASSEMBLY, TYPE I	EACH	75
ELASTOMERIC BEARING ASSEMBLY, TYPE II	EACH	37
FLOOR DRAINS	EACH	99
BRIDGE SEAT SEALER	SQ FT	1860
NEOPRENE EXPANSION JOINT 2"	LIN FT	237
NEOPRENE EXPANSION JOINT 2 1/2"	LIN FT	46
NEOPRENE EXPANSION JOINT 4"	LIN FT	142
PREFORMED JOINT SEAL 1 3/4"	LIN FT	32
PREFORMED JOINT SEAL 2 1/2"	LIN FT	95
FORMED CONCRETE CURB REPAIR (VARIES)	LIN FT	611
FORMED CONCRETE REPAIR (DEPTH GREATER THAN 5")	SQ FT	6

*** 311 SQ FT SUPER
2660 SQ FT SUB

12

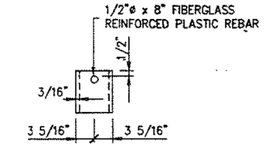

6"ø FIBERGLASS PIPE

NOTE: FIBERGLASS PIPE SHALL CONFORM TO ASTM: D2996, WITH SHORT-TIME RUPTURE STRENGTH HOOP TENSILE STRESS OF 30,000 PSI MINIMUM. THE SURFACE OF THE FIBERGLASS PIPE SHALL BE FREE OF BOND INHIBITING AGENTS.

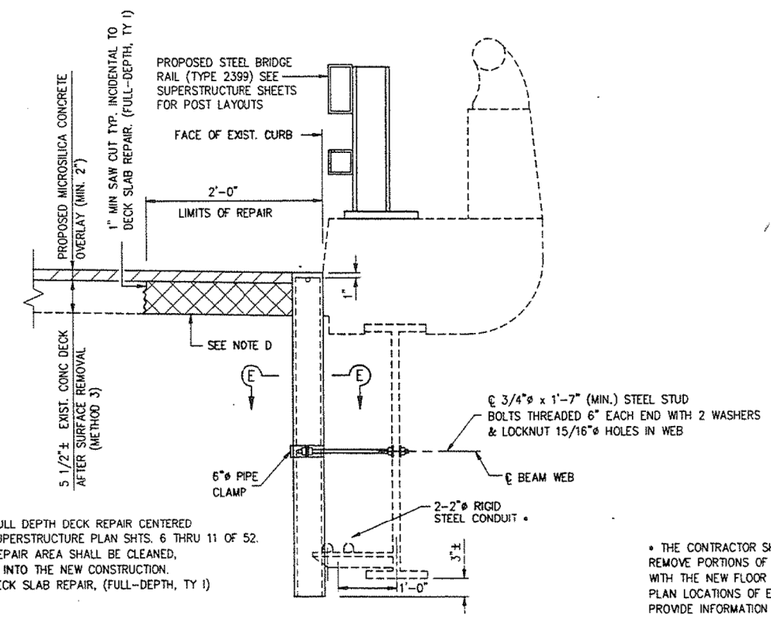

SECTION D-D (FLOOR DRAIN REPLACEMENT)

(SEE SUPERSTRUCTURE SHTS 6 THRU 11 OF 52 FOR LOCATIONS)

NOTE D

DOUBLE HATCH AREA INDICATES FULL DEPTH DECK REPAIR CENTERED AT DECK DRAIN LOCATIONS SEE SUPERSTRUCTURE PLAN SHTS. 6 THRU 11 OF 52. REINFORCEMENT EXTENDING INTO REPAIR AREA SHALL BE CLEANED, STRAIGHTENED AND INCORPORATED INTO THE NEW CONSTRUCTION. COST SHALL BE INCIDENTAL TO "DECK SLAB REPAIR, (FULL-DEPTH, TY I) SEE SPECIAL PROVISIONS

* THE CONTRACTOR SHALL RELOCATE ACTIVE CONDUITS AND REMOVE PORTIONS OF INACTIVE CONDUITS THAT ARE IN CONFLICT WITH THE NEW FLOOR DRAINS. SEE SHEETS 1 & 2 OF 52 FOR THE PLAN LOCATIONS OF EXISTING CONDUITS. THE ENGINEER SHALL PROVIDE INFORMATION ON WHICH CONDUITS ARE ACTIVE AND WHICH ARE INACTIVE. COST FOR THIS WORK SHALL BE INCIDENTAL TO FLOOR DRAINS (EACH).

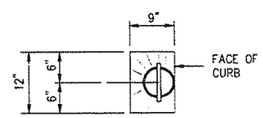

TOP PLAN

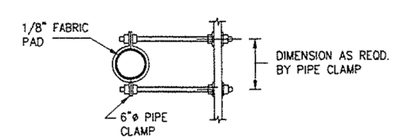

SECTION E-E

1993

EXAMINED

ENGINEER OF STRUCTURAL SERVICES

PASSED

ENGINEER OF BRIDGE AND STRUCTURES

APPROVED

DIRECTOR OF HIGHWAYS

ILLINOIS DEPARTMENT OF TRANSPORTATION

BILL OF MATERIAL & MISC. DETAILS
BRIDGE REPAIRS
1ST AVE (IL 171) S.N. 016-0486 & 016-0487
OVER CHICAGO SANITARY & SHIP CANAL
AND RAMP "E"

F.A.U. RT. 1505
COOK CO. IL
STA. 30+72.59
STA. 35+12.88

SECTION 0707-626 B (BR)

12/03/93 03:01:13 P.M. 67DTLS.DWG

X:\10000S\10093\Eng_Docs_Phase_II\SN_016_0486_0487_1st_Ave_over_Canal\Final_0486\0160486_60J16_X33_exist_93_repairs.dgn

6/23/2014 2:59:18 PM

benesch
engineers · scientists · planners
Alfred Benesch & Company
205 North Michigan Avenue, Suite 2400
Chicago, Illinois 60601
312-565-0450 Job No. 10093

FOR INFORMATION ONLY

FILE NAME = 0160486_60J16_X33_exist_93_repairs.dgn	USER NAME = tjanicke	DESIGNED - FSM	REVISED -
		CHECKED - RMM	REVISED -
	PLOT SCALE =	DRAWN - FSM	REVISED -
	PLOT DATE = 6/23/2014	CHECKED - RMM	REVISED -

STATE OF ILLINOIS
DEPARTMENT OF TRANSPORTATION

EXISTING PLANS (1993) – REPAIR DETAILS
STRUCTURE NO. 016-0486

SHEET NO. SGX33 OF SGX48 SHEETS

F.A.P. RTE.	SECTION	COUNTY	TOTAL SHEETS	SHEET NO.
373	2013-038B-R	COOK	821	723
		CONTRACT NO. 60J16		
		ILLINOIS FED. AID PROJECT		

ROUTE NO.	SECTION	COUNTY	TOTAL SHEETS	SHEET NO.
IL 171	**	COOK	383	265
		ILLINOIS	FED. AID PROJECT	

SHEET 12 OF 52

** SECTION 0707-626B (BR)

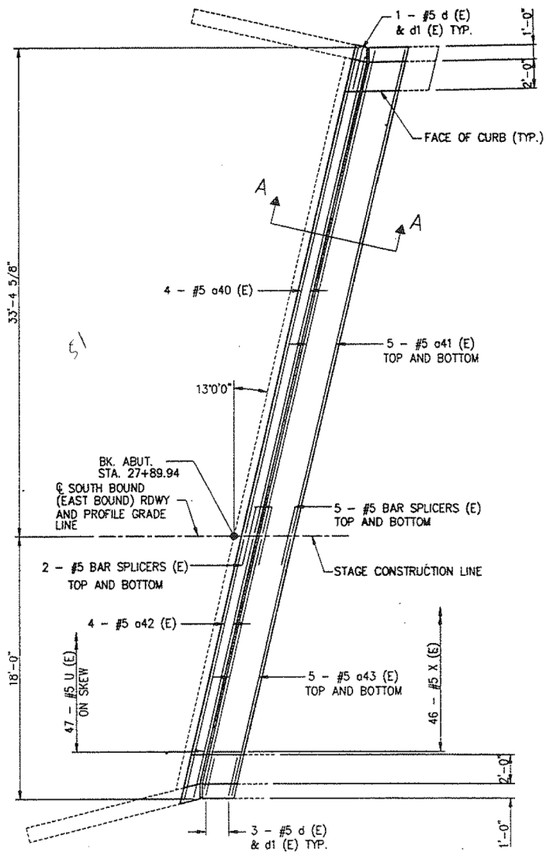

EAST ABUTMENT SOUTH BOUND (EAST BOUND) – PLAN VIEW

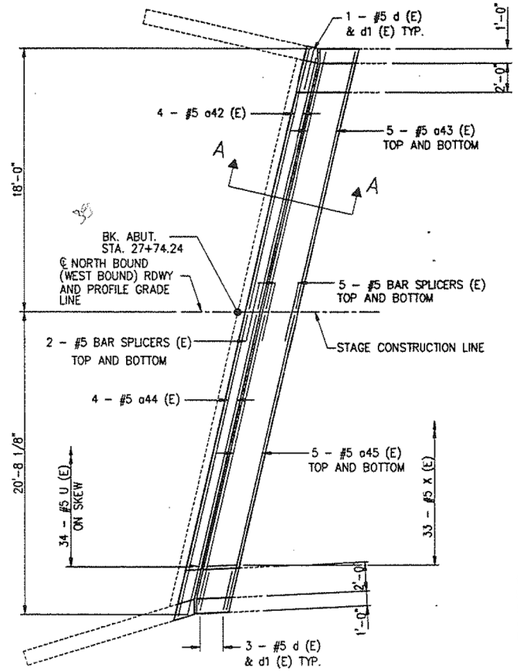

EAST ABUTMENT NORTH BOUND (WEST BOUND) – PLAN VIEW

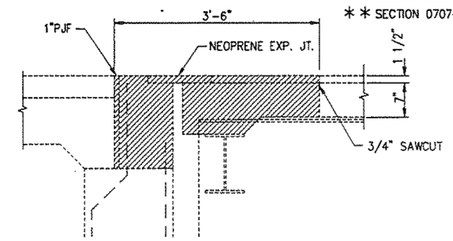

SECTION A-A EXISTING

HATCHED AREAS TO BE REMOVED

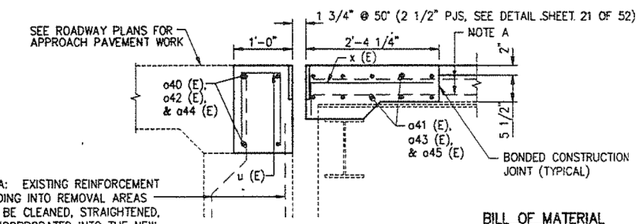

NOTE A: EXISTING REINFORCEMENT EXTENDING INTO REMOVAL AREAS SHALL BE CLEANED, STRAIGHTENED, AND INCORPORATED INTO THE NEW CONSTRUCTION.

SECTION A-A PROPOSED

BILL OF MATERIAL

BAR	NO.	SIZE	LENGTH	SHAPE
a40 (E)	4	#5	34'-0"	
a41 (E)	10	#5	33'-9"	
a42 (E)	8	#5	18'-2"	
a43 (E)	20	#5	17'-11"	
a44 (E)	4	#5	20'-11"	
a45 (E)	10	#5	20'-7"	
d (E)	16	#5	6'-0"	
d1 (E)	16	#5	6'-8"	
u (E)	81	#5	2'-9"	
x (E)	79	#5	2'-7"	
REINFORCEMENT BARS, EPOXY COATED.			LBS.	1980
CONCRETE REMOVAL			C.U. YDS.	13.3
CLASS X CONCRETE, SUPERSTRUCTURE			C.U. YDS.	14.0
STRUCTURAL STEEL			POUND	3750
BAR SPLICERS			EACH	28
PREFORMED JOINT SEAL 2 1/2"			LIN. FT.	95

REINFORCEMENT BARS DESIGNATED (E) SHALL BE EPOXY COATED.

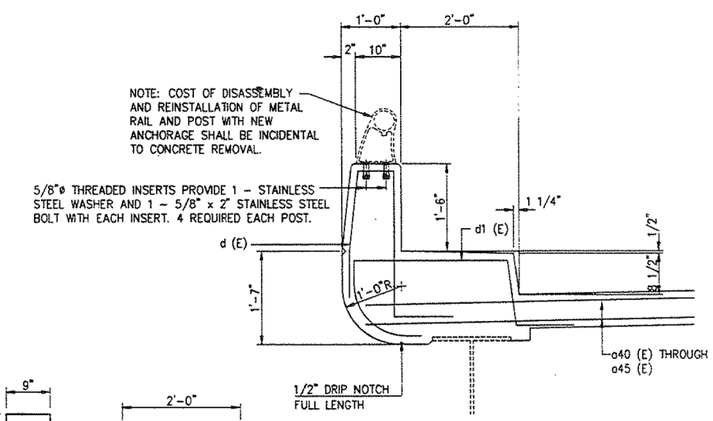

PROPOSED

TYPICAL SECTION AT CURB

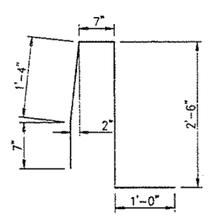

BAR d (E)

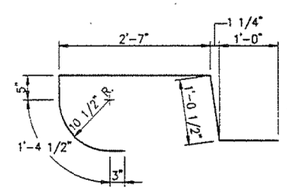

BAR d1 (E)

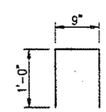

BAR u (E)

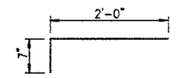

BAR x (E)

ILLINOIS DEPARTMENT OF TRANSPORTATION

PREFORMED JOINT SEAL

BRIDGE REPAIRS

1ST AVE (IL 171) S.N. 016-0486 & 016-0487 OVER SANITARY & SHIP CANAL AND RAMP "E"

F.A.U. RT. 1505
COOK CO. IL
STA. 30+72.59
STA. 35+12.88

SECTION 0707-626B (BR)

1993

EXAMINED

ENGINEER OF STRUCTURAL SERVICES

PASSED

ENGINEER OF BRIDGE AND STRUCTURES

APPROVED

DIRECTOR OF HIGHWAYS

10/20/03 05:03:17 P.M. 489-7EJF.DWG
0486 & 0487 PREFORMED JOINT SEAL EAST ABUTMENTS

benesch engineers · scientists · planners

Alfred Benesch & Company
205 North Michigan Avenue, Suite 2400
Chicago, Illinois 60601
312-565-0450 Job No. 10093

FOR INFORMATION ONLY

FILE NAME =	USER NAME = tjanicke	DESIGNED - FSM	REVISED -	STATE OF ILLINOIS DEPARTMENT OF TRANSPORTATION	EXISTING PLANS (1993) – PREFORMED JOINT SEAL STRUCTURE NO. 016-0486	F.A.P. RTE. 373	SECTION 2013-038B-R	COUNTY COOK	TOTAL SHEETS 821	SHEET NO. 724
		CHECKED - RMM	REVISED -					CONTRACT NO. 60J16		
0160486_60J16_X34_exist_93_pjs.dgn	PLOT SCALE =	DRAWN - FSM	REVISED -					ILLINOIS FED. AID PROJECT		
	PLOT DATE = 6/23/2014	CHECKED - RMM	REVISED -		SHEET NO. SGX34 OF SGX48 SHEETS					

X:\10000S\10093\Eng_Docs_Phase_II\SN_016_0486_0487_1st_Ave_over_Canal\Final\Final_0486\0160486_60J16_X34_exist_93_pjs.dgn 2:59:27 PM 6/23/2014

ROUTE NO.	SECTION	COUNTY	TOTAL SHEETS	SHEET NO.
IL 171	**	COOK	383	266
		ILLINOIS	FED. AID PROJECT	

** SECTION 0707-B (BR)

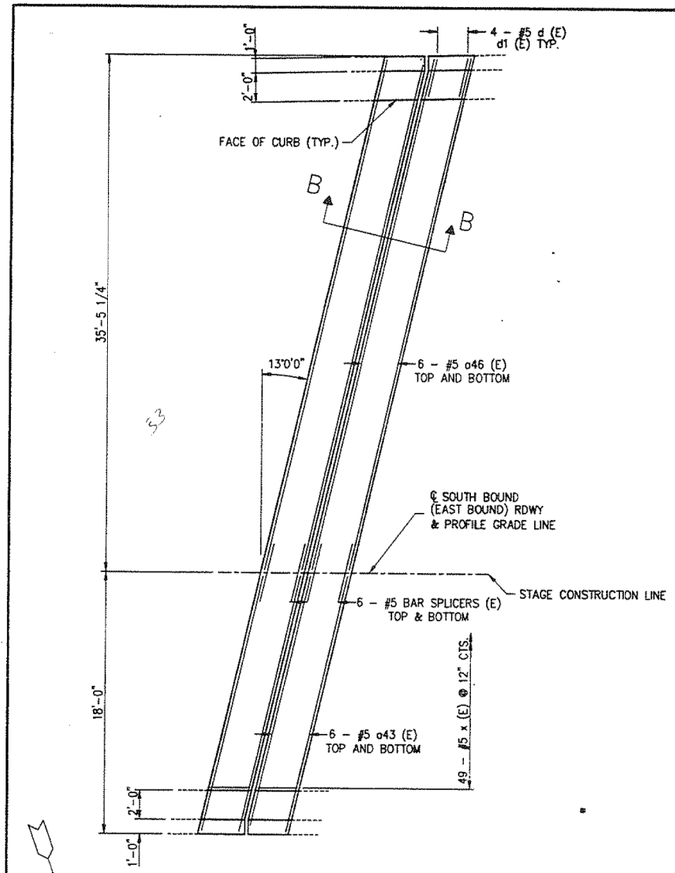

PIER 2 SOUTH BOUND (EAST BOUND) – PLAN VIEW

NOTE: REINFORCEMENT IS SAME BOTH SIDES OF JOINT

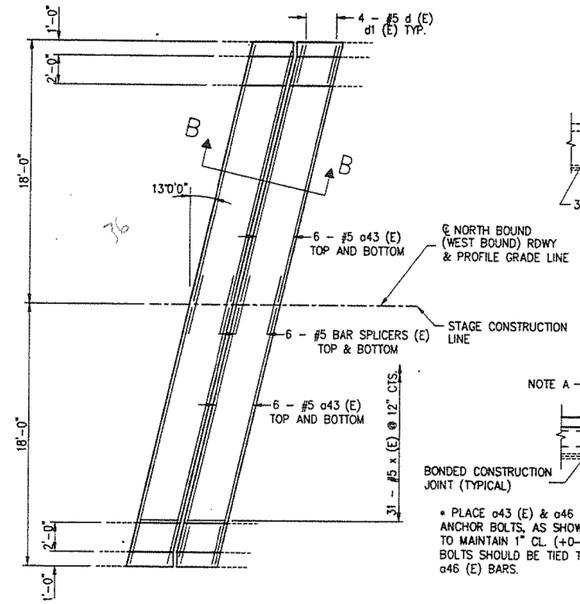

PIER 13 NORTH BOUND (WEST BOUND) – PLAN VIEW

NOTE: REINFORCEMENT IS SAME BOTH SIDES OF JOINT

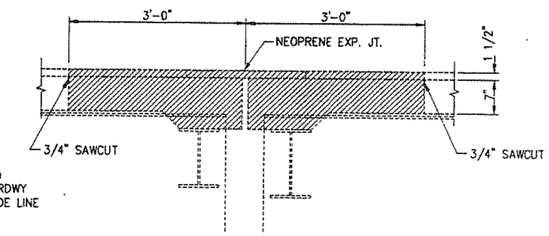

SECTION B-B EXISTING

HATCHED AREAS TO BE REMOVED

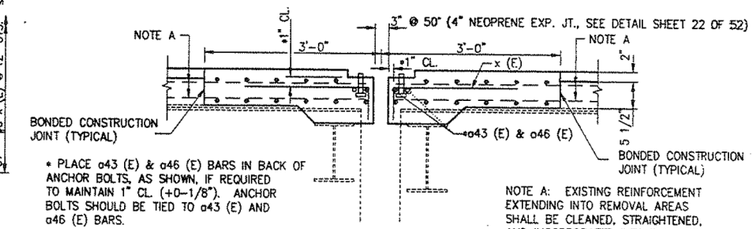

* PLACE a43 (E) & a46 (E) BARS IN BACK OF ANCHOR BOLTS, AS SHOWN, IF REQUIRED TO MAINTAIN 1" CL. (+0-1/8"). ANCHOR BOLTS SHOULD BE TIED TO a43 (E) AND a46 (E) BARS.

NOTE A: EXISTING REINFORCEMENT EXTENDING INTO REMOVAL AREAS SHALL BE CLEANED, STRAIGHTENED, AND INCORPORATED INTO THE NEW CONSTRUCTION.

SECTION B-B PROPOSED

NOTE: REINFORCEMENT IS SAME BOTH SIDES OF JOINT

BILL OF MATERIAL

BAR	NO.	SIZE	LENGTH	SHAPE
a43 (E)	72	#5	17'-11"	
a46 (E)	24	#5	35'-10"	
d (E)	32	#5	6'-0"	
d1 (E)	32	#5	6'-8"	
x (E)	160	#5	2'-7"	
REINFORCEMENT BARS EPOXY COATED.			LBS.	3100
CONCRETE REMOVAL			C.U. YDS.	17.8
CLASS X CONCRETE, SUPERSTRUCTURE			C.U. YDS.	18.5
BAR SPLICERS			EACH	48
NEOPRENE EXPANSION JOINT 4"			LIN. FT.	94

REINFORCEMENT BARS DESIGNATED (E) SHALL BE EPOXY COATED.

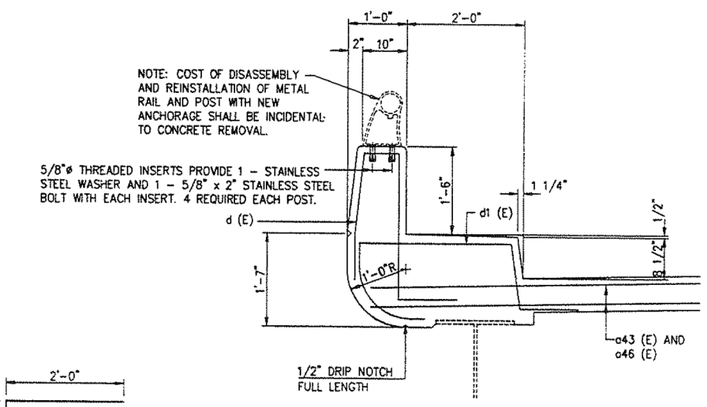

PROPOSED

TYPICAL SECTION AT CURB

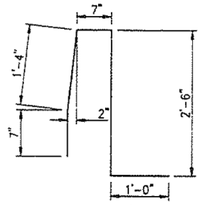

BAR d (E)

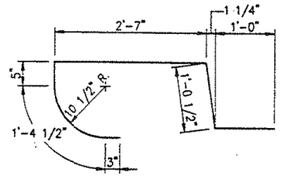

BAR d1 (E)

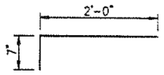

BAR x (E)

ILLINOIS DEPARTMENT OF TRANSPORTATION

NEOPRENE EXPANSION JOINT
PIER 2 AND PIER 13
BRIDGE REPAIRS
1ST AVE (IL 171) S.N. 016-0486 & 016-0487
OVER SANITARY & SHIP CANAL
AND RAMP "E"

F.A.U. RT. 1505
COOK CO. IL
STA. 30+72.59
STA. 35+12.88

SECTION 0707-626B (BR)

10/29/93 02:38:44 P.M. NEJP2P13.DWG
0486 & 0487 PREFORMED JOINT SEAL EAST ABUTMENTS

EXAMINED _____ 1993
ENGINEER OF STRUCTURAL SERVICES

PASSED _____
ENGINEER OF BRIDGE AND STRUCTURES

APPROVED _____
DIRECTOR OF HIGHWAYS

benesch
engineers · scientists · planners

Alfred Benesch & Company
205 North Michigan Avenue, Suite 2400
Chicago, Illinois 60601
312-565-0450 Job No. 10093

FOR INFORMATION ONLY

FILE NAME =	USER NAME = tjanicke	DESIGNED - FSM	REVISED -
		CHECKED - RMM	REVISED -
0160486_60J16_X35_exist_93_p2.dgn	PLOT SCALE =	DRAWN - FSM	REVISED -
	PLOT DATE = 6/23/2014	CHECKED - RMM	REVISED -

STATE OF ILLINOIS
DEPARTMENT OF TRANSPORTATION

EXISTING PLANS (1993) – EXPANSION JOINT PIER 2
STRUCTURE NO. 016-0486

SHEET NO. SGX35 OF SGX48 SHEETS

F.A.P. RTE.	SECTION	COUNTY	TOTAL SHEETS	SHEET NO.
373	2013-038B-R	COOK	821	725
		CONTRACT NO. 60J16		
		ILLINOIS FED. AID PROJECT		

6/23/2014 2:59:37 PM X:\10000S\10093\Eng_Docs_Phase_II\SN_016_0486_0487_1st_Ave_over_Canal\Final\0486\0160486_60J16_X35_exist_93_p2.dgn

ROUTE NO.	SECTION	COUNTY	TOTAL SHEETS	SHEET NO.
IL 171	* *	COOK	388	267
		ILLINOIS	FED. AID PROJEC	

* * SECTION 0707-626B (BR)

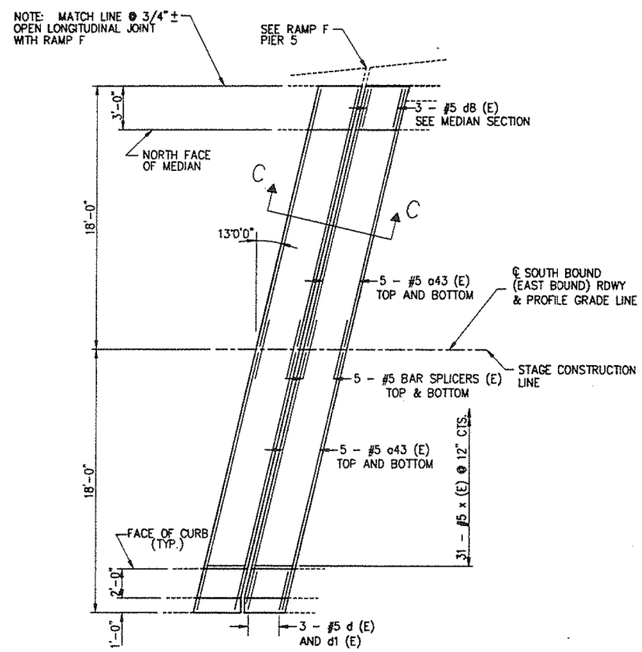

PIER 5 SOUTH BOUND (EAST BOUND) - PLAN VIEW

NOTE: REINFORCEMENT IS SAME BOTH SIDES OF JOINT

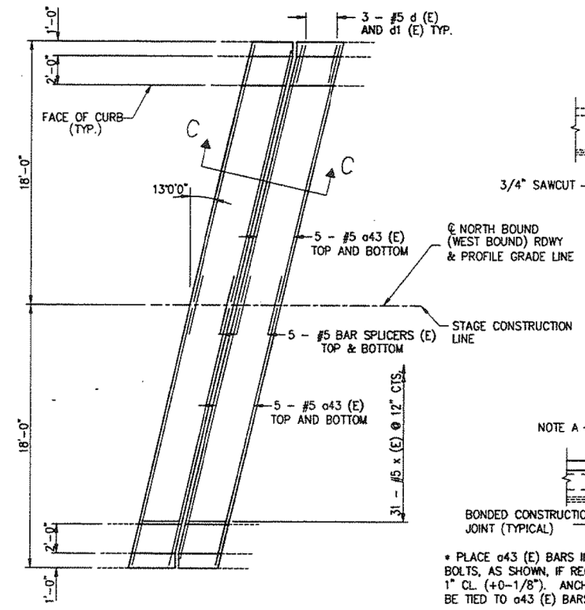

PIER 16 NORTH BOUND (WEST BOUND) - PLAN VIEW

NOTE: REINFORCEMENT IS SAME BOTH SIDES OF JOINT

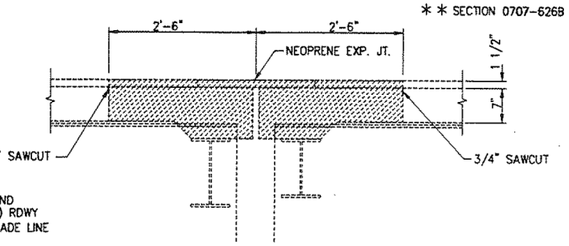

SECTION C-C EXISTING

HATCHED AREAS TO BE REMOVED

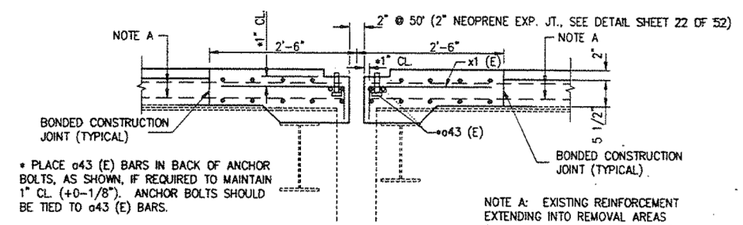

* PLACE a43 (E) BARS IN BACK OF ANCHOR BOLTS, AS SHOWN, IF REQUIRED TO MAINTAIN 1" CL. (+0-1/8"). ANCHOR BOLTS SHOULD BE TIED TO a43 (E) BARS.

SECTION C-C PROPOSED

NOTE: REINFORCEMENT IS SAME BOTH SIDES OF JOINT

NOTE A: EXISTING REINFORCEMENT EXTENDING INTO REMOVAL AREAS SHALL BE CLEANED, STRAIGHTENED, AND INCORPORATED INTO THE NEW CONSTRUCTION.

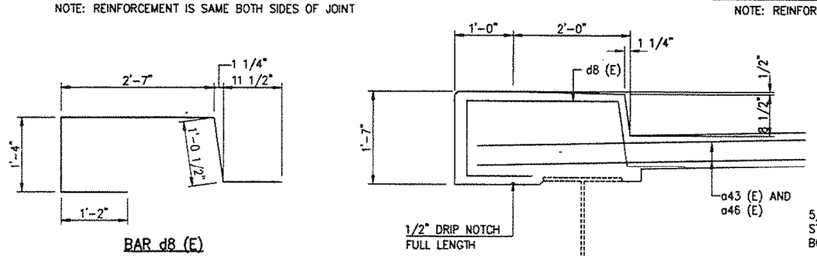

BAR d8 (E)

MEDIAN SECTION

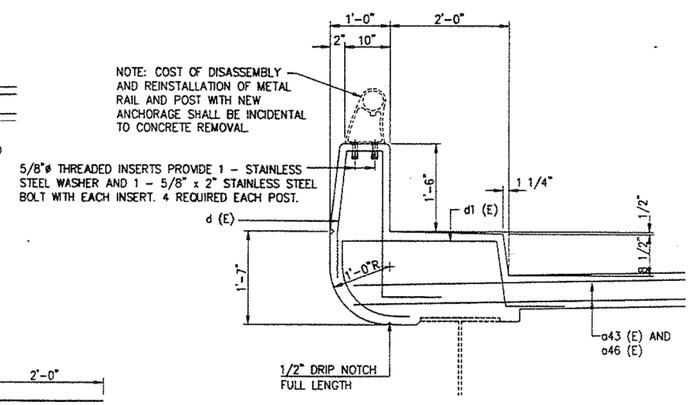

PROPOSED

TYPICAL SECTION AT CURB

BILL OF MATERIAL

BAR	NO.	SIZE	LENGTH	SHAPE
a43 (E)	80	#5	17'-11"	
d (E)	18	#5	6'-0"	
d1 (E)	18	#5	6'-8"	
d8 (E)	6	#5	7'-1"	
x (E)	124	#5	2'-7"	
REINFORCEMENT BARS EPOXY COATED.			LBS.	2110
CONCRETE REMOVAL			C.U. YDS.	12.6
CLASS X CONCRETE, SUPERSTRUCTURE			C.U. YDS.	13.1
BAR SPLICERS			EACH	40
NEOPRENE EXPANSION JOINT 2"			LIN. FT.	76

REINFORCEMENT BARS DESIGNATED (E) SHALL BE EPOXY COATED.

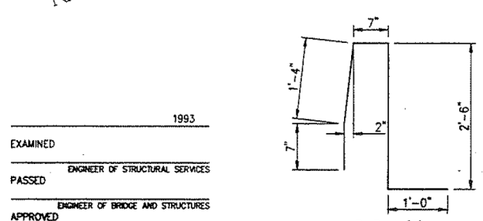

BAR d (E)

BAR d1 (E)

BAR x (E)

1993

EXAMINED

ENGINEER OF STRUCTURAL SERVICES

PASSED

ENGINEER OF BRIDGE AND STRUCTURES

APPROVED

DIRECTOR OF HIGHWAYS

11/30/93 07:04:14 P.M. NEPSP16.DWG
0486 & 0487 NEOPRENE EXPANSION JOINTS PIERS 5 AND 16

ILLINOIS DEPARTMENT OF TRANSPORTATION

NEOPRENE EXPANSION JOINT
PIER 5 AND PIER 16
BRIDGE REPAIRS
1ST AVE (IL 171) S.N. 016-0486 & 016-0487
OVER SANITARY & SHIP CANAL
AND RAMP "E"

F.A.U. RT. 1505
COOK CO. IL
STA. 30+72.59
STA. 35+12.88

SECTION 0707-626B (BR)

X:\10000S\10093\Eng_Docs_Phase_II\SN_016_0486_0487_1st_Ave_over_Canal\Final\0486_0160J16_X36_exist_93_p5.dgn 2:59:46 PM 6/23/2014

benesch
engineers · scientists · planners

Alfred Benesch & Company
205 North Michigan Avenue, Suite 2400
Chicago, Illinois 60601
312-565-0450 Job No. 10093

FOR INFORMATION ONLY

FILE NAME =	USER NAME = tjanicke	DESIGNED - FSM	REVISED -
0160486_60J16_X36_exist_93_p5.dgn		CHECKED - RMM	REVISED -
	PLOT SCALE =	DRAWN - FSM	REVISED -
	PLOT DATE = 6/23/2014	CHECKED - RMM	REVISED -

STATE OF ILLINOIS
DEPARTMENT OF TRANSPORTATION

EXISTING PLANS (1993) - EXPANSION JOINT PIER 5
STRUCTURE NO. 016-0486

SHEET NO. SGX36 OF SGX48 SHEETS

F.A.P. RTE.	SECTION	COUNTY	TOTAL SHEETS	SHEET NO.
373	2013-038B-R	COOK	821	726
		CONTRACT NO. 60J16		
		ILLINOIS FED. AID PROJECT		

ROUTE NO.	SECTION	COUNTY	TOTAL SHEETS	SHEET NO.
IL 171	**	COOK	505	266
		ILLINOIS	FED. AID PROJECT	

** SECTION 0707-626B (BR)

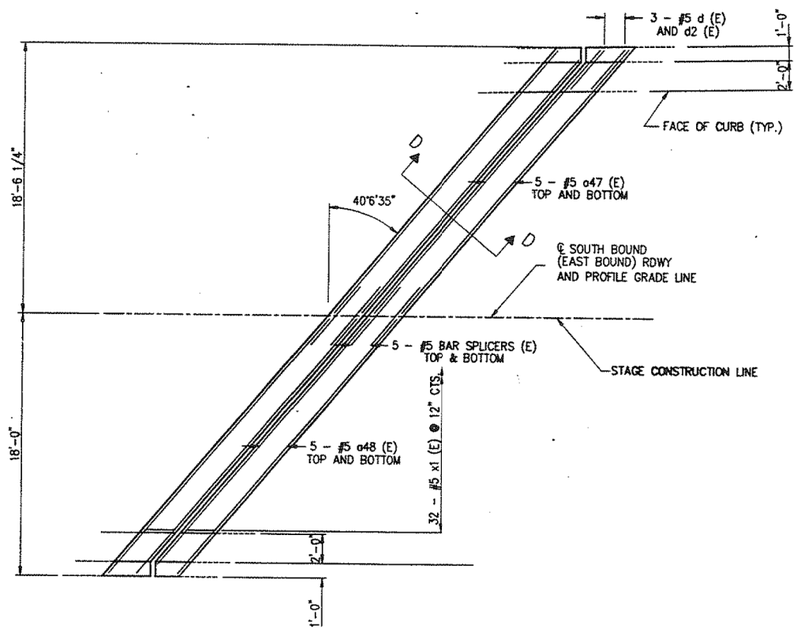

PIER 7 SOUTH BOUND (EAST BOUND; S.N.016-0486) - PLAN VIEW

NOTE: REINFORCEMENT IS SAME BOTH SIDES OF JOINT

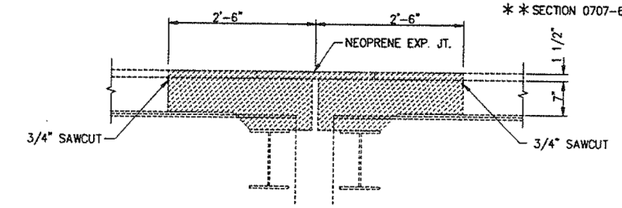

SECTION D-D EXISTING

HATCHED AREAS TO BE REMOVED

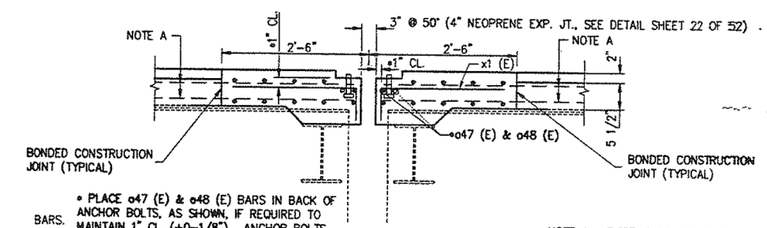

* PLACE a47 (E) & a48 (E) BARS IN BACK OF ANCHOR BOLTS, AS SHOWN, IF REQUIRED TO MAINTAIN 1" CL. (+0-1/8"). ANCHOR BOLTS SHOULD BE TIED TO a47 (E) AND a48 (E) BARS.

SECTION D-D PROPOSED

NOTE: REINFORCEMENT IS SAME BOTH SIDES OF JOINT

NOTE A: EXISTING REINFORCEMENT EXTENDING INTO REMOVAL AREAS SHALL BE CLEANED, STRAIGHTENED, AND INCORPORATED INTO THE NEW CONSTRUCTION.

BILL OF MATERIAL

BAR	NO.	SIZE	LENGTH	SHAPE
a47 (E)	20	#5	23'-6"	
a48 (E)	20	#5	22'-10"	
d (E)	12	#5	6'-0"	
d2 (E)	12	#5	7'-7"	
x1 (E)	64	#5	3'-6"	
REINFORCEMENT BARS EPOXY COATED.			LBS.	1370
CONCRETE REMOVAL			C.U. YDS.	8.3
CLASS X CONCRETE, SUPERSTRUCTURE			C.U. YDS.	8.6
BAR SPLICERS			EACH	20
NEOPRENE EXPANSION JOINT 4"			LIN. FT.	48

REINFORCEMENT BARS DESIGNATED (E) SHALL BE EPOXY COATED.

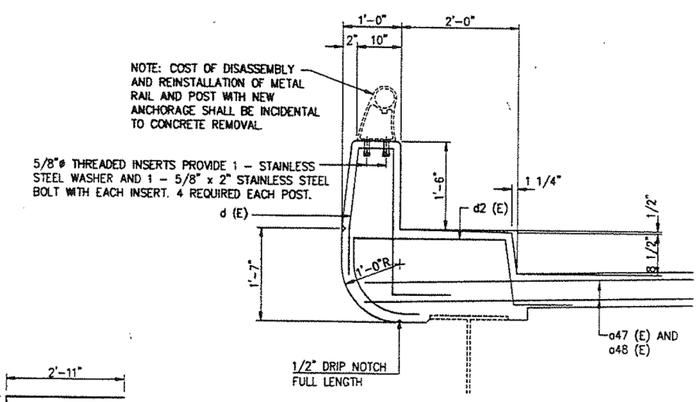

PROPOSED

TYPICAL SECTION AT CURB

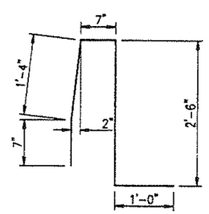

BAR d (E)

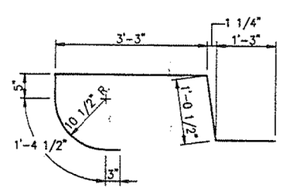

BAR d2 (E)

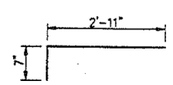

BAR x1 (E)

1993

EXAMINED

ENGINEER OF STRUCTURAL SERVICES

PASSED

ENGINEER OF BRIDGE AND STRUCTURES

APPROVED

DIRECTOR OF HIGHWAYS

10/29/93 02:59:45 P.M. NEXP7.DWG
0486 & 0487 NEOPRENE EXPANSION JOINT - PIER 7

ILLINOIS DEPARTMENT OF TRANSPORTATION

NEOPRENE EXPANSION JOINT
PIER 7
BRIDGE REPAIRS
1ST AVE (IL171) S.N. 016-0486 & 016-0487
OVER SANITARY & SHIP CANAL
AND RAMP "E"

F.A.U. RT. 1505
COOK CO. IL
STA. 30+72.59
STA. 35+12.88

SECTION 0707-626B (BR)

benesch
engineers · scientists · planners
Alfred Benesch & Company
205 North Michigan Avenue, Suite 2400
Chicago, Illinois 60601
312-565-0450 Job No. 10093

FOR INFORMATION ONLY

FILE NAME =	USER NAME = tjanicke	DESIGNED - FSM	REVISED -	STATE OF ILLINOIS DEPARTMENT OF TRANSPORTATION	EXISTING PLANS (1993) - EXPANSION JOINT PIER 7 STRUCTURE NO. 016-0486	F.A.P. RTE.	SECTION	COUNTY	TOTAL SHEETS	SHEET NO.
		CHECKED - RMM	REVISED -			373	2013-038B-R	COOK	821	727
0160486.60J16.X37.exist.93.p7.dgn	PLOT SCALE =	DRAWN - FSM	REVISED -			CONTRACT NO. 60J16				
	PLOT DATE = 6/23/2014	CHECKED - RMM	REVISED -		SHEET NO. SGX37 OF SGX48 SHEETS	ILLINOIS FED. AID PROJECT				

6/23/2014 2:59:55 PM X:\100005\10093\Eng_Docs_Phase_II\SN_016_0486_0487_1st_Ave_over_Canal\Final\0486\0160486_60J16_X37_exist_93_p7.dgn

SHEET 17 OF 52

ROUTE NO.	SECTION	COUNTY	TOTAL SHEETS	SHEET NO.
IL 171	* *	COOK	985	27D
		ILLINOIS	FED. AID PROJECT	

* * SECTION 0707-626B (BR)

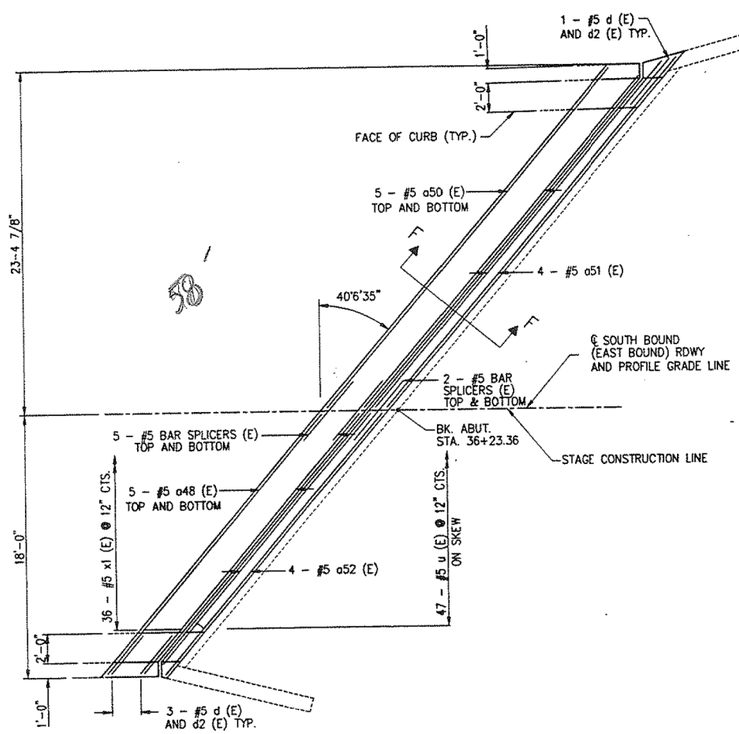

WEST ABUTMENT SOUTH BOUND (EAST BOUND) – PLAN VIEW

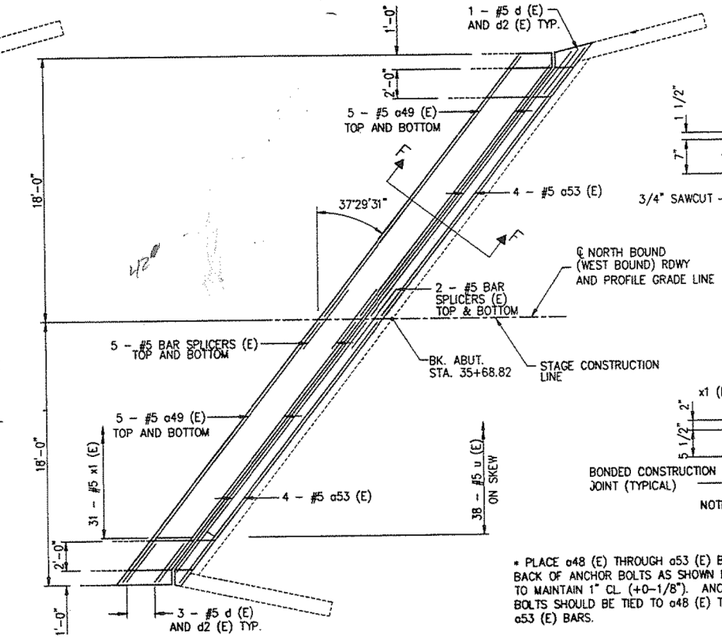

WEST ABUTMENT NORTH BOUND (WEST BOUND) – PLAN VIEW

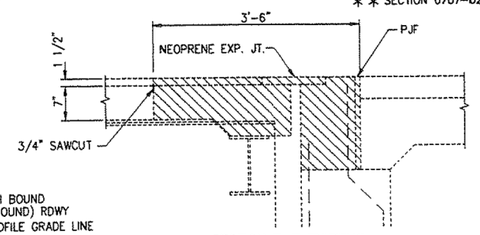

SECTION F-F EXISTING
HATCHED AREAS TO BE REMOVED

NOTE A: EXISTING REINFORCEMENT EXTENDING INTO REMOVAL AREAS SHALL BE CLEANED, STRAIGHTENED, AND INCORPORATED INTO THE NEW CONSTRUCTION.

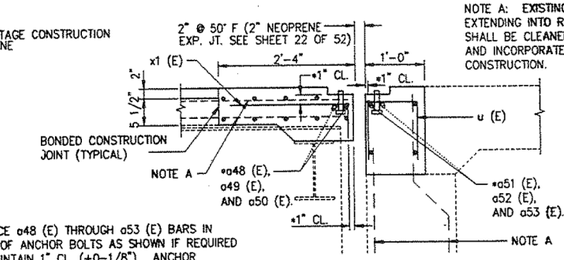

* PLACE a48 (E) THROUGH a53 (E) BARS IN BACK OF ANCHOR BOLTS AS SHOWN IF REQUIRED TO MAINTAIN 1" CL. (+0-1/8"). ANCHOR BOLTS SHOULD BE TIED TO a48 (E) THROUGH a53 (E) BARS.

SECTION F-F PROPOSED

BILL OF MATERIAL

BAR	NO.	SIZE	LENGTH	SHAPE
a48 (E)	10	#5	22'-10"	
a49 (E)	20	#5	22'-0"	
a50 (E)	10	#5	29'-11"	
a51 (E)	4	#5	30'-3"	
a52 (E)	4	#5	23'-2"	
a53 (E)	8	#5	22'-4"	
d (E)	16	#5	6'-0"	
d2 (E)	16	#5	7'-7"	
u (E)	85	#5	2'-9"	
x1 (E)	67	#5	3'-6"	
REINFORCEMENT BARS EPOXY COATED.			LBS.	2130
CONCRETE REMOVAL			C.U. YDS.	14.0
CLASS X CONCRETE, SUPERSTRUCTURE			C.U. YDS.	14.7
BAR SPLICERS			EACH	28
NEOPRENE EXPANSION JOINT 2"			LIN. FT.	100

REINFORCEMENT BARS DESIGNATED (E) SHALL BE EPOXY COATED.

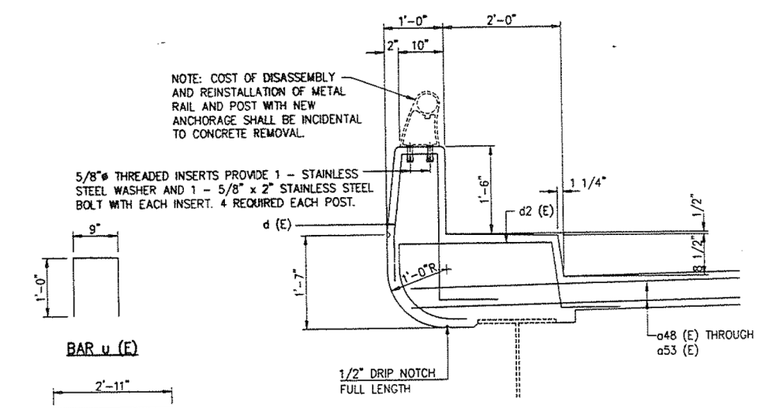

PROPOSED
TYPICAL SECTION AT CURB

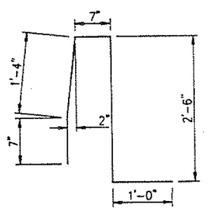

BAR d (E)

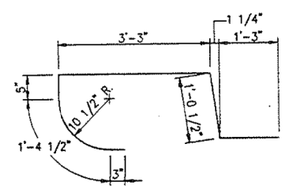

BAR d2 (E)

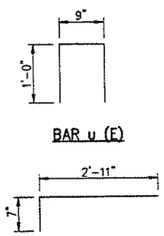

BAR u (E)

BAR x1 (E)

ILLINOIS DEPARTMENT OF TRANSPORTATION
NEOPRENE EXPANSION JOINT
WEST ABUTMENTS
BRIDGE REPAIRS
1ST AVE (IL 171) S.N. 016-0486 & 016-0487
OVER SANITARY & SHIP CANAL
AND RAMP "E"
SECTION 0707-626B (BR)

F.A.U. RT. 1505
COOK CO. IL
STA. 30+72.59
STA. 35+12.88

12/03/93 04:18:39 P.M. NEIMABUT.DWG
0486 & 0487 NEOPRENE EXPANSION JOINT - WEST ABUTMENTS

1993

EXAMINED
ENGINEER OF STRUCTURAL SERVICES

PASSED
ENGINEER OF BRIDGE AND STRUCTURES

APPROVED
DIRECTOR OF HIGHWAYS

benesch
engineers · scientists · planners

Alfred Benesch & Company
205 North Michigan Avenue, Suite 2400
Chicago, Illinois 60601
312-565-0450 Job No. 10093

FOR INFORMATION ONLY

FILE NAME =	USER NAME = tjanicke	DESIGNED - FSM	REVISED -
		CHECKED - RMM	REVISED -
0160486_60J16_X38_exist_93_wabut.dgn	PLOT SCALE =	DRAWN - FSM	REVISED -
	PLOT DATE = 6/23/2014	CHECKED - RMM	REVISED -

STATE OF ILLINOIS
DEPARTMENT OF TRANSPORTATION

EXISTING PLANS (1993) – EXPANSION JOINT WEST ABUTMENT
STRUCTURE NO. 016-0486

SHEET NO. SGX38 OF SGX48 SHEETS

F.A.P. RTE.	SECTION	COUNTY	TOTAL SHEETS	SHEET NO.
373	2013-038B-R	COOK	821	728
		CONTRACT NO. 60J16		
		ILLINOIS FED. AID PROJECT		

6/23/2014 3:00:04 PM X:\10000S\10093\Eng_Docs_Phase_II\SN_016_0486_0487_1st_Ave_over_Canal\Final\0486\0160486_60J16_X38_exist_93_wabut.dgn

ROUTE NO.	SECTION	COUNTY	TOTAL SHEETS	SHEET NO.
IL 171	* *	COOK	363	271
		ILLINOIS	FED. AID PROJECT	

* * SECTION 0707-626B (BR)

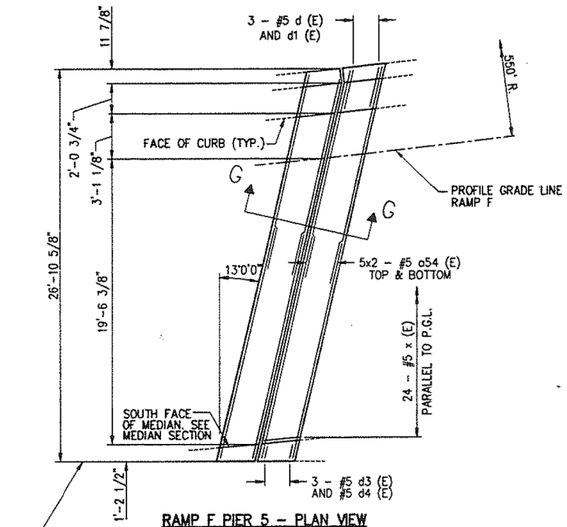

RAMP F PIER 5 - PLAN VIEW

NOTE: REINFORCEMENT IS SAME BOTH SIDES OF JOINT EXCEPT AS NOTED

NOTE: MATCH LINE WITH S. BOUND (E. BOUND) LANES AT 3/4"± OPEN LONGITUDINAL JT.

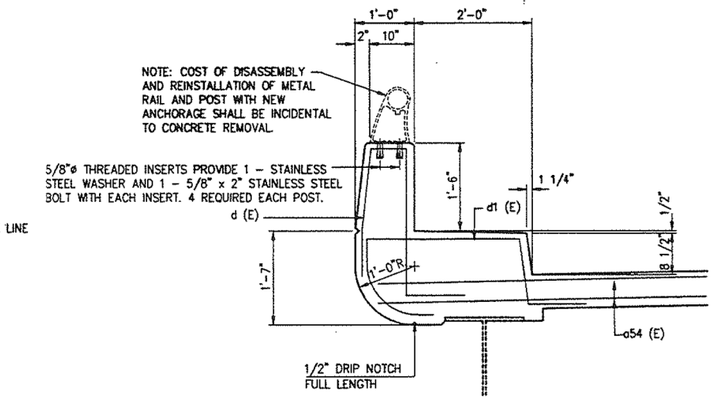

PROPOSED
TYPICAL SECTION AT CURB

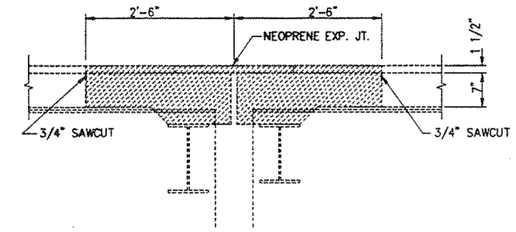

SECTION G-G EXISTING
HATCHED AREAS TO BE REMOVED

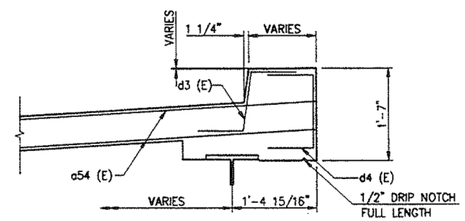

MEDIAN SECTION

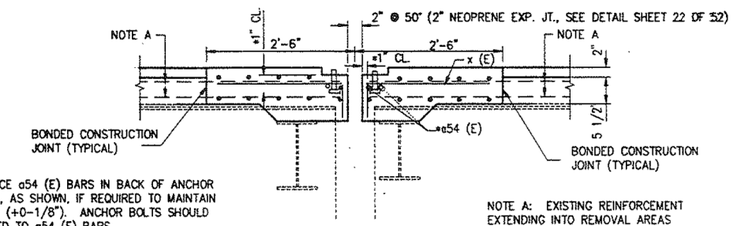

* PLACE a54 (E) BARS IN BACK OF ANCHOR BOLTS, AS SHOWN, IF REQUIRED TO MAINTAIN 1" CL. (+0-1/8"). ANCHOR BOLTS SHOULD BE TIED TO a54 (E) BARS.

SECTION G-G PROPOSED
NOTE: REINFORCEMENT IS SAME BOTH SIDES OF JOINT

NOTE A: EXISTING REINFORCEMENT EXTENDING INTO REMOVAL AREAS SHALL BE CLEANED, STRAIGHTENED, AND INCORPORATED INTO THE NEW CONSTRUCTION.

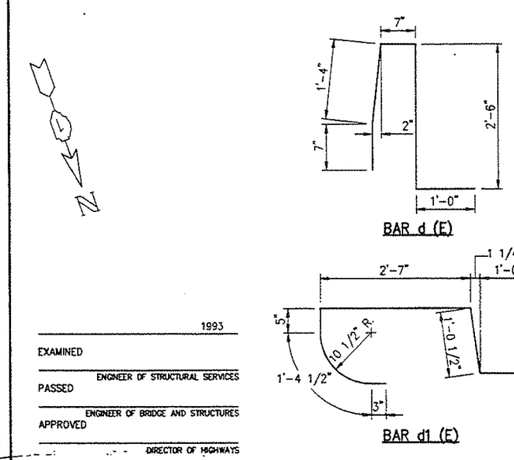

BAR d (E)

BAR d3 (E)

BAR d1 (E)

BAR d4 (E)

BAR x (E)

BILL OF MATERIAL

BAR	NO.	SIZE	LENGTH	SHAPE
a54 (E)	40	#5	15'-0"	
d (E)	6	#5	6'-0"	
d1 (E)	6	#5	6'-8"	
d3 (E)	6	#5	2'-7"	
d4 (E)	6	#5	2'-9"	
x (E)	48	#5	2'-7"	
REINFORCEMENT BARS EPOXY COATED.			LBS.	870
CONCRETE REMOVAL			C.U. YDS.	4.7
CLASS X CONCRETE, SUPERSTRUCTURE			C.U. YDS.	4.8
NEOPRENE EXPANSION JOINT 2"			LIN. FT.	28

REINFORCEMENT BARS DESIGNATED (E) SHALL BE EPOXY COATED.

BARS INDICATED "5x2 - #5 ETC." INDICATES 5 LINES OF BARS WITH 2 LENGTHS PER LINE.

ILLINOIS DEPARTMENT OF TRANSPORTATION
NEOPRENE EXPANSION JOINT
RAMP F - PIER 5
BRIDGE REPAIRS
1ST AVE (IL 171) S.N. 016-0486 & 016-0487
OVER SANITARY & SHIP CANAL
AND RAMP "E"
F.A.U. RT. 1505
COOK CO. IL
STA. 30+72.59
STA. 35+12.88
SECTION 0707-626B (BR)

N

10/29/03 03:25:27 P.M. NEJRFP5.DWG
0486 & 0487 NEOPRENE EXPANSION JOINT RAMP F PIER 5

1993
EXAMINED
ENGINEER OF STRUCTURAL SERVICES
PASSED
ENGINEER OF BRIDGE AND STRUCTURES
APPROVED
DIRECTOR OF HIGHWAYS

benesch
engineers · scientists · planners
Alfred Benesch & Company
205 North Michigan Avenue, Suite 2400
Chicago, Illinois 60601
312-565-0450 Job No. 10093

FOR INFORMATION ONLY

FILE NAME =	USER NAME = tjanicke	DESIGNED - FSM	REVISED -
		CHECKED - RMM	REVISED -
0160486_60J16_X39_exist_93_rampfp5.dgn	PLOT SCALE =	DRAWN - FSM	REVISED -
	PLOT DATE = 6/23/2014	CHECKED - RMM	REVISED -

STATE OF ILLINOIS
DEPARTMENT OF TRANSPORTATION

EXISTING PLANS (1993) - EXPANSION JOINT RAMP F PIER 5
STRUCTURE NO. 016-0486
SHEET NO. SGX39 OF SGX48 SHEETS

F.A.P. RTE.	SECTION	COUNTY	TOTAL SHEETS	SHEET NO.
373	2013-038B-R	COOK	821	729
		CONTRACT NO. 60J16		
		ILLINOIS FED. AID PROJECT		

X:\10000S\10093\Eng_Docs_Phase_II\SN_016_0486_0487_1st_Ave_over_Canal\Final\0486\0160486_60J16_X39_exist_93_rampfp5.dgn 3:00:14 PM 6/23/2014

ROUTE NO.	SECTION	COUNTY	TOTAL SHEETS	SHEET NO.
IL 171	**	COOK	883	272
		ILLINOIS	FED. AID PROJECT	

** SECTION 0707-626B (BR)

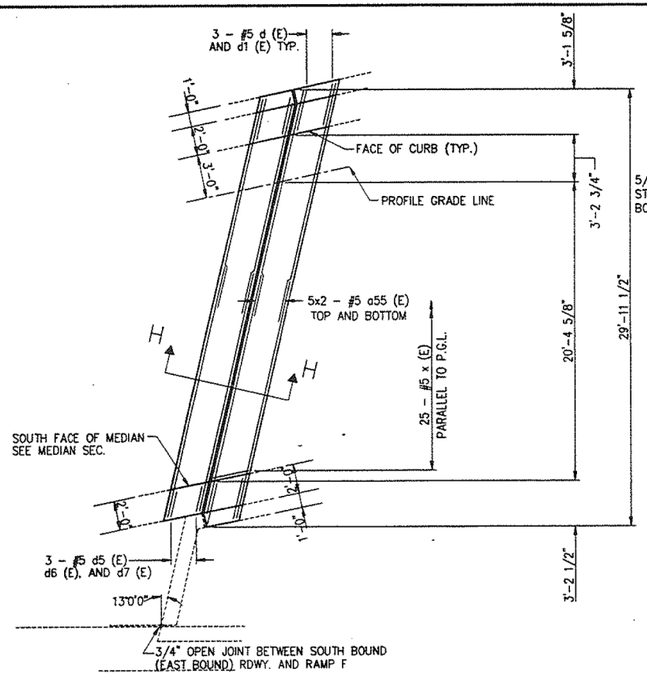

RAMP F PIER 6

NOTE: REINFORCEMENT IS SAME BOTH SIDES OF JOINT EXCEPT AS NOTED

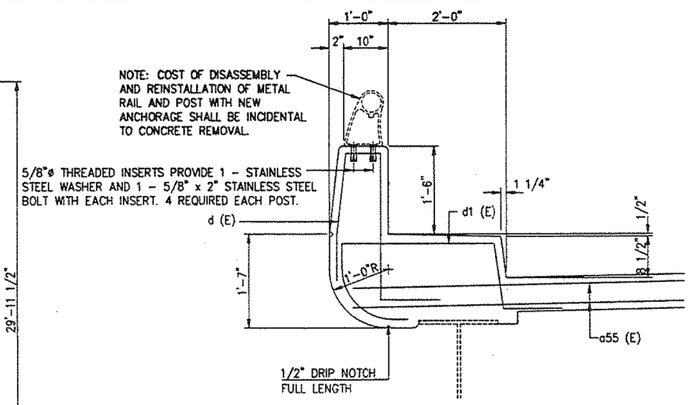

PROPOSED
TYPICAL SECTION AT CURB

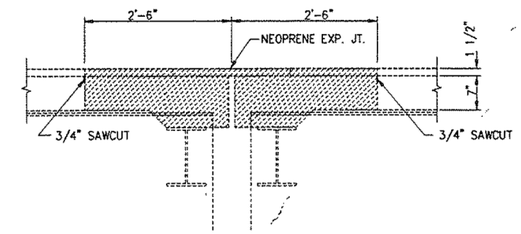

SECTION H-H EXISTING
HATCHED AREAS TO BE REMOVED

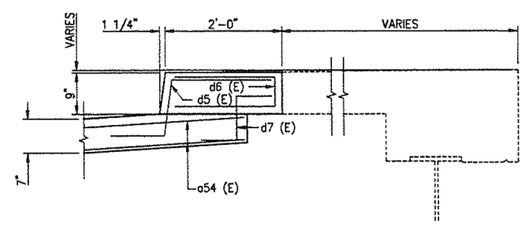

MEDIAN SECTION

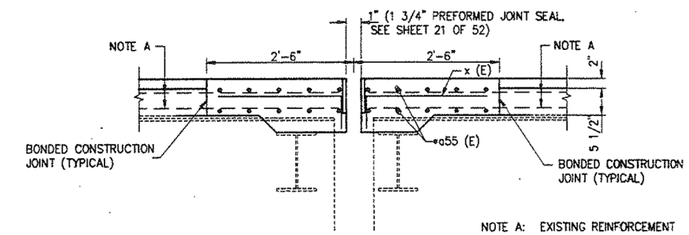

SECTION H-H PROPOSED

NOTE: REINFORCEMENT IS SAME BOTH SIDES OF JOINT

NOTE A: EXISTING REINFORCEMENT EXTENDING INTO REMOVAL AREAS SHALL BE CLEANED, STRAIGHTENED, AND INCORPORATED INTO THE NEW CONSTRUCTION.

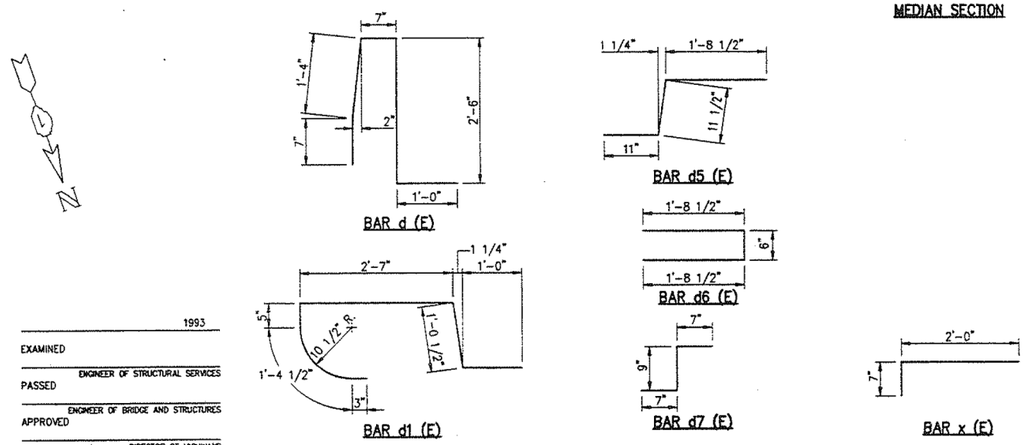

BILL OF MATERIAL

BAR LIST

BAR	NO.	SIZE	LENGTH	SHAPE
a55 (E)	40	#5	16'-6"	
d (E)	6	#5	6'-0"	
d1 (E)	6	#5	6'-8"	
d5 (E)	6	#5	3'-7"	
d6 (E)	6	#5	3'-11"	
d7 (E)	6	#5	1'-11"	
x (E)	50	#5	2'-7"	
REINFORCEMENT BARS EPOXY COATED.			LBS.	960
CONCRETE REMOVAL			C.U. YDS.	5.2
CLASS X CONCRETE, SUPERSTRUCTURE			C.U. YDS.	5.3
STRUCTURAL STEEL			POUND	810
PREFORMED JOINT SEAL 1 3/4"			LIN. FT.	32

REINFORCEMENT BARS DESIGNATED (E) SHALL BE EPOXY COATED.

BARS INDICATED "5x2 - #5 (ETC)" INDICATES 5 LINES OF BARS WITH 2 LENGTHS PER LINE.

ILLINOIS DEPARTMENT OF TRANSPORTATION
PREFORMED JOINT SEAL
RAMP F - PIER 6
BRIDGE REPAIRS
1ST AVE (IL 171) S.N. 016-0486 & 016-0487
OVER SANITARY & SHIP CANAL
AND RAMP "E"
F.A.U. RT. 1505
COOK CO. IL
STA. 30+72.59
STA. 35+12.88
SECTION 0707-626B (BR.

1993
EXAMINED
ENGINEER OF STRUCTURAL SERVICES
PASSED
ENGINEER OF BRIDGE AND STRUCTURES
APPROVED
DIRECTOR OF HIGHWAYS

10/29/93 03:52:04 P.M. P:\SHEETS.DWG
0486 & 0487 NEOPRENE EXPANSION JOINT RAMP F PIER 6

N

benesch
engineers · scientists · planners
Alfred Benesch & Company
205 North Michigan Avenue, Suite 2400
Chicago, Illinois 60601
312-565-0450 Job No. 10093

FOR INFORMATION ONLY

FILE NAME =	USER NAME = tjanicke	DESIGNED - FSM	REVISED -
		CHECKED - RMM	REVISED -
0160486_60J16_X40_exist_93_rampf6.dgn	PLOT SCALE =	DRAWN - FSM	REVISED -
	PLOT DATE = 6/23/2014	CHECKED - RMM	REVISED -

STATE OF ILLINOIS
DEPARTMENT OF TRANSPORTATION

EXISTING PLANS (1993) - EXPANSION JOINT RAMP F PIER 6
STRUCTURE NO. 016-0486
SHEET NO. SGX40 OF SGX48 SHEETS

F.A.P. RTE.	SECTION	COUNTY	TOTAL SHEETS	SHEET NO.
373	2013-038B-R	COOK	821	730
		CONTRACT NO. 60J16		
		ILLINOIS FED. AID PROJECT		

6/23/2014 3:00:22 PM X:\10000S\10093\Eng_Docs_Phase_II\SN_016_0486_0487_1st_Ave_over_Canal\Final\0486\0160486_60J16_X40_exist_93_rampf6.dgn

ROUTE NO.	SECTION	COUNTY	TOTAL SHEETS	SHEET NO.
IL 171	* *	COOK	363	273
		ILLINOIS	FED. AID PROJECT	

* * SECTION 0707-626B (BR)

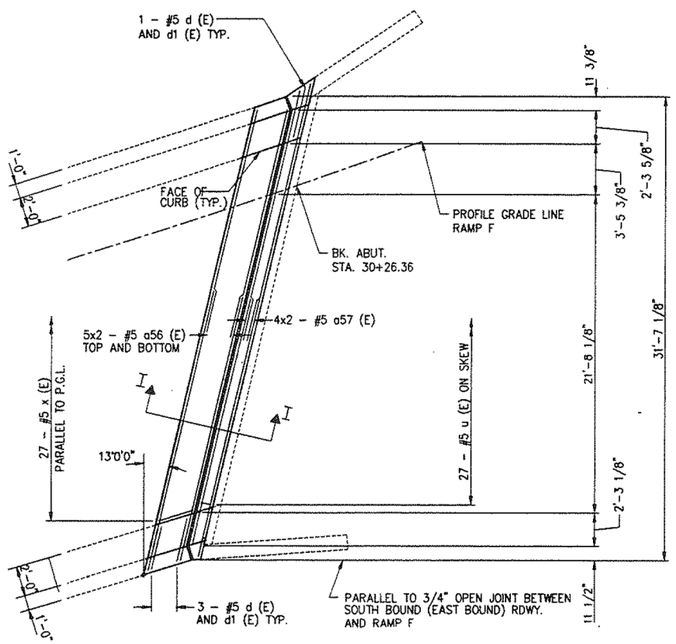

RAMP F - WEST ABUTMENT

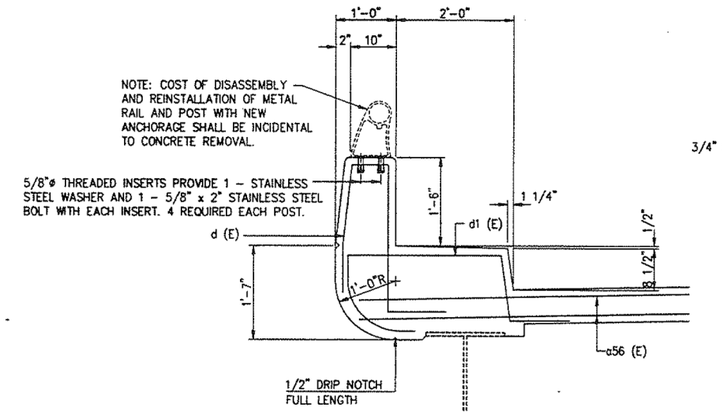

PROPOSED
TYPICAL SECTION AT CURB

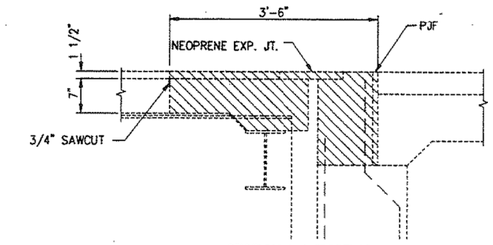

SECTION I-I EXISTING
HATCHED AREAS TO BE REMOVED

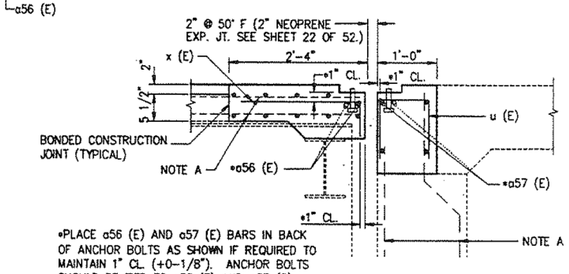

*PLACE a56 (E) AND a57 (E) BARS IN BACK OF ANCHOR BOLTS AS SHOWN IF REQUIRED TO MAINTAIN 1" CL. (+0-1/8"). ANCHOR BOLTS SHOULD BE TIED TO a56 (E) AND a57 (E).

SECTION I-I PROPOSED

NOTE A: EXISTING REINFORCEMENT EXTENDING INTO REMOVAL AREAS SHALL BE CLEANED, STRAIGHTENED, AND INCORPORATED INTO THE NEW CONSTRUCTION.

BILL OF MATERIAL

BAR	NO.	SIZE	LENGTH	SHAPE
a56 (E)	20	#5	17'-6"	
a57 (E)	8	#5	18'-0"	
d (E)	8	#5	6'-0"	
d1 (E)	8	#5	6'-8"	
u (E)	27	#5	2'-9"	
x (E)	27	#5	2'-7"	
REINFORCEMENT BARS EPOXY COATED.			LBS.	770
CONCRETE REMOVAL			C.U. YDS.	4.7
CLASS X CONCRETE, SUPERSTRUCTURE			C.U. YDS.	5.0
NEOPRENE EXPANSION JOINT 2"			LIN. FT.	33

REINFORCEMENT BARS DESIGNATED (E) SHALL BE EPOXY COATED.

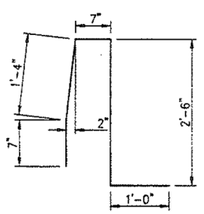

BAR d (E)

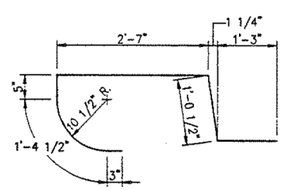

BAR d1 (E)

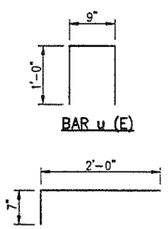

BAR u (E)

BAR x (E)

1993

EXAMINED

ENGINEER OF STRUCTURAL SERVICES

PASSED

ENGINEER OF BRIDGE AND STRUCTURES

APPROVED

DIRECTOR OF HIGHWAYS

10/29/03 03:59:01 P.M. RFA8U1.DWG
0486 & 0487 NEOPRENE EXPANSION JOINT - RAMP F ABUTMENT

ILLINOIS DEPARTMENT OF TRANSPORTATION

NEOPRENE EXPANSION JOINT
RAMP F - WEST ABUTMENT
BRIDGE REPAIRS
1ST AVE (IL 171) S.N. 016-0486 & 016-0487
OVER SANITARY & SHIP CANAL
AND RAMP "E"

F.A.U. RT. 1505
COOK CO. IL
STA. 30+72.59
STA. 35+12.88

SECTION 0707-626B (BR)

benesch
engineers · scientists · planners
Alfred Benesch & Company
205 North Michigan Avenue, Suite 2400
Chicago, Illinois 60601
312-565-0450 Job No. 10093

FOR INFORMATION ONLY

FILE NAME =	USER NAME = tjanicke	DESIGNED - FSM	REVISED -
		CHECKED - RMM	REVISED -
0160486_60J16_X41_exist_expjt_rampF.dgn	PLOT SCALE =	DRAWN - FSM	REVISED -
	PLOT DATE = 6/23/2014	CHECKED - RMM	REVISED -

STATE OF ILLINOIS
DEPARTMENT OF TRANSPORTATION

EXISTING PLANS (1993) - EXPANSION JOINT RAMP F ABUTMENT
STRUCTURE NO. 016-0486

SHEET NO. SGX41 OF SGX48 SHEETS

F.A.P. RTE.	SECTION	COUNTY	TOTAL SHEETS	SHEET NO.
373	2013-038B-R	COOK	821	731
		CONTRACT NO. 60J16		
		ILLINOIS	FED. AID PROJECT	

X:\100005\10093\Eng_Docs_Phase_II\SN_016_0486_0487_1st_Ave_over_Canal\Final_0486\0160486_60J16_X41_exist_expjt_rampF.dgn 3:00:32 PM 6/23/2014

ROUTE NO.	SECTION	COUNTY	TOTAL SHEETS	SHEET NO.
IL 171	**	COOK	583	274
		ILLINOIS	FED. AID PROJECT	

** SECTION 0707-626B (BR)

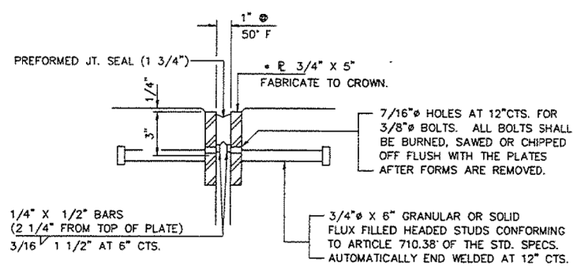

1 3/4" PREFORMED JOINT SEAL DETAIL

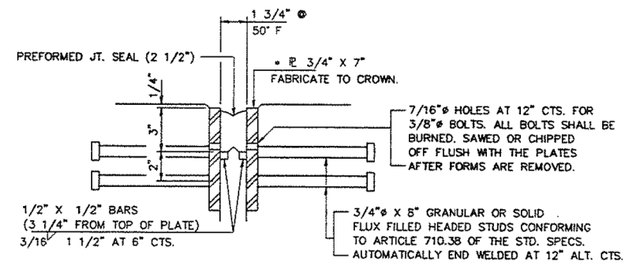

2 1/2" PREFORMED JOINT SEAL DETAIL

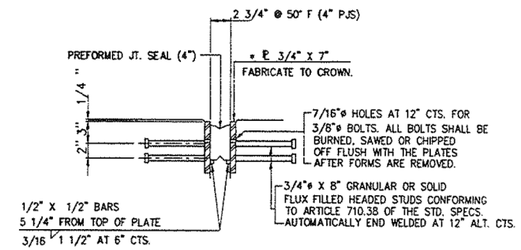

4" PREFORMED JOINT SEAL DETAIL

•• FURNISH IN SEGMENTS OF 20 FT. MAXIMUM LENGTH. MAXIMUM SPACE BETWEEN INSTALLED SEGMENTS SHALL BE 3/16". SEAL SPACE WITH SILICONE SEALANT SUITABLE FOR STRUCTURAL STEEL.

NOTES:
AFTER FABRICATION ALL SURFACES OF THE STEEL PLATES SHALL BE GIVEN ONE SHOP COAT OF PAINT SPECIFIED FOR STRUCTURAL STEEL. NO FIELD PAINTING REQUIRED.

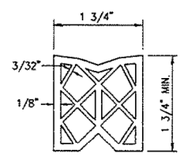

PREFORMED JOINT SEAL (1 3/4")

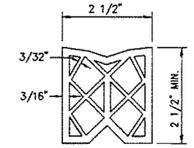

PREFORMED JOINT SEAL (2 1/2")

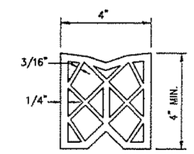

PREFORMED JOINT SEAL (4")

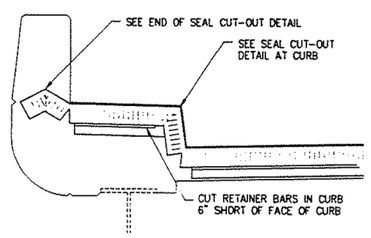

SECTION
TYPICAL SEAL TREATMENTS AT CURB
FOR DETAIL OF CURB SEE SHEET 12 OF 52

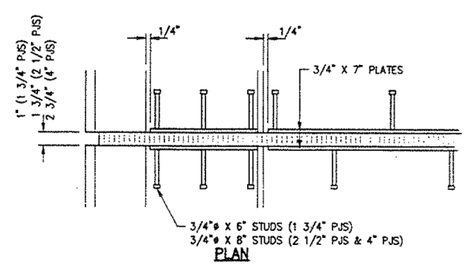

PLAN

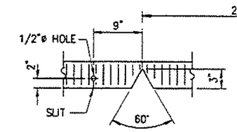

SEAL CUT-OUT @ CURB

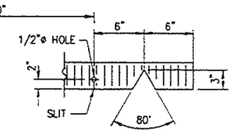

END OF SEAL CUT-OUT

ILLINOIS DEPARTMENT OF TRANSPORTATION
PREFORMED JOINT SEAL DETAILS
BRIDGE REPAIRS
1ST AVE (IL 171) S.N. 016-0486 & 016-D487
OVER SANITARY & SHIP CANAL AND RAMP "E"
F.A.U. RT. 1505
COOK CO. IL
STA. 30+72.59
STA. 35+12.88
SECTION 0707-626B (BR)

10/27/93 01:13:53 P.M. 486-7PJS.DWG
0486 & 0487 PREFORMED JOINT SEAL DETAILS

1993
EXAMINED
ENGINEER OF STRUCTURAL SERVICES
PASSED
ENGINEER OF BRIDGE AND STRUCTURES
APPROVED
DIRECTOR OF HIGHWAYS

benesch
engineers · scientists · planners
Alfred Benesch & Company
205 North Michigan Avenue, Suite 2400
Chicago, Illinois 60601
312-565-0450 Job No. 10093

FOR INFORMATION ONLY

FILE NAME =	USER NAME = tjanicke	DESIGNED - FSM	REVISED -
0160486_60J16_X42_exist_93_pjsdets.dgn		CHECKED - RMM	REVISED -
	PLOT SCALE =	DRAWN - FSM	REVISED -
	PLOT DATE = 6/23/2014	CHECKED - RMM	REVISED -

STATE OF ILLINOIS
DEPARTMENT OF TRANSPORTATION

EXISTING PLANS (1993) - PREFORMED JOINT SEAL DETAILS
STRUCTURE NO. 016-0486
SHEET NO. SGX42 OF SGX48 SHEETS

F.A.P. RTE.	SECTION	COUNTY	TOTAL SHEETS	SHEET NO.
373	2013-038B-R	COOK	821	732
		CONTRACT NO. 60J16		
		ILLINOIS FED. AID PROJECT		

X:\100005\10093\Eng_Docs_Phase_II\SN_016_0486_0487_1st_Ave_over_Canal\Final\0486\0160486_60J16_X42_exist_93_pjsdets.dgn 3:00:42 PM 6/23/2014

ROUTE NO.	SECTION	COUNTY	TOTAL SHEETS	SHEET NO.
IL 171	**	COOK	383	275
		ILLINOIS	FED. AID PROJECT	

** SECTION 0707-626B (BR)

Joint Size	"C" at 50°F	"D" at 50°F
2"	2"	1 1/2" Min.
2 1/2"	2 1/2"	1 3/4" Min.
4"	3"	2 1/2" Min.

INSTALLATION NOTES

1. Install sponge mandrels into positions shown to form flap convolution.
2. Install parapet or sidewalk piece (trim roadway flap to fit before applying epoxy).
3. Install continuous seal in roadway.
4. Install anchor blocks as indicated.

NOTE A: Maximum spacing of anchor bolts shall be 12" centers.

SKEW LIMITATIONS

The details of the anchor blocks and the elastomeric membrane in the parapet, as shown, are for up to 50° skews.

For skews greater than 50°, the anchor blocks and the elastomeric membrane, installed in accordance with dimension "D", might require modifications to insure a minimum clearance of 1 1/2" from centerline of anchor studs to edge of parapet opening. The anchor blocks and the elastomeric membrane shall also be installed to the top of the parapet with the anchor studs spaced at ±12" cts.

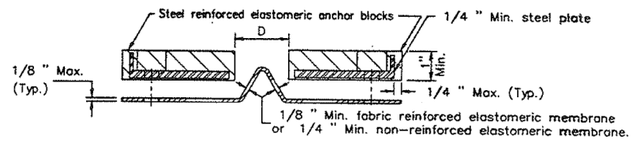

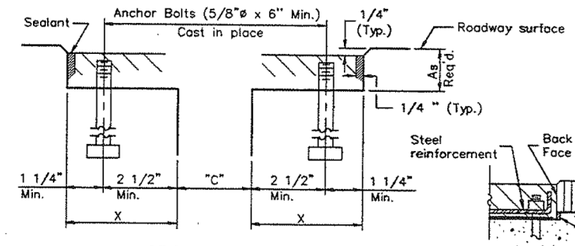

CROSS SECTION

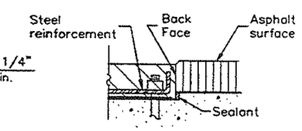

ANCHOR BLOCK REINFORCEMENT WITH ASPHALT SURFACE

GENERAL NOTES

Continuous Seal Neoprene Expansion Joint shall consist of molded anchor blocks of elastomer and steel, field assembled over continuous lengths of elastomeric membrane.

The elastomeric membrane shall be premolded with a single or a double upward convolution that will have a "memory" to return to its molded position upon joint closure.

The steel reinforcement must extend up the back face of anchor blocks when asphalt surfaces are used but is optional in concrete blockout.

The convolution length shall be such that the extended length will not be greater than the manufactured length when the joint is fully expanded in its design range and will not protrude above the anchor blocks when the joint is fully compressed.

Joint openings shall be adjusted in accordance with Article 503.07(c) of the Standard Specifications when the deck is poured at an ambient temperature other than 50° F.

The parapet and sidewalk flaps may be furnished factory vulcanized to the roadway membrane provided the centerline of the convolution is maintained and the process and method meet the approval of the Engineer.

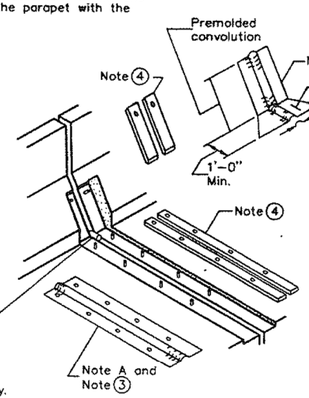

AT PARAPET

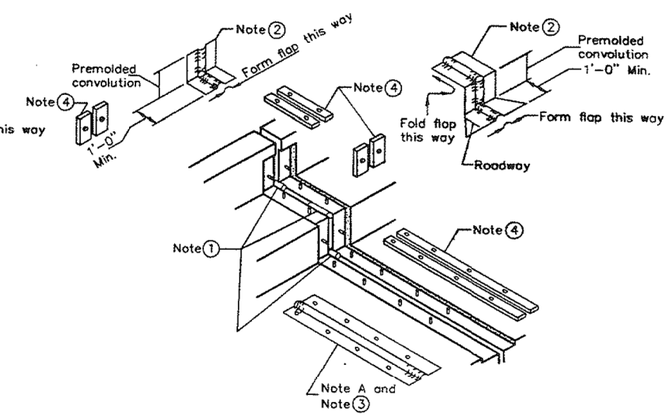

AT SIDEWALK OR MEDIAN

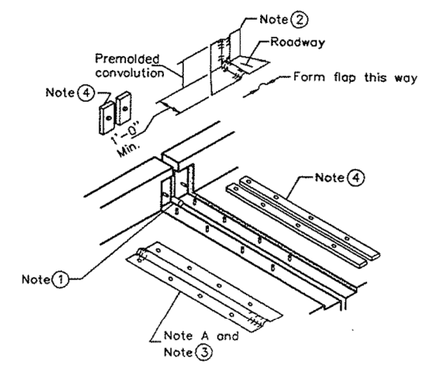

AT WALL

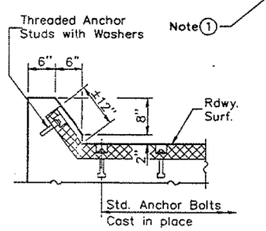

AT CURB

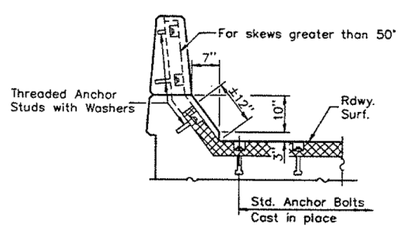

AT PARAPET

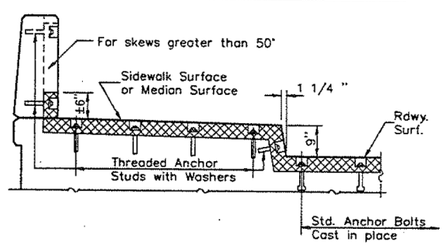

AT SIDEWALK OR MEDIAN
TYPICAL END TREATMENTS

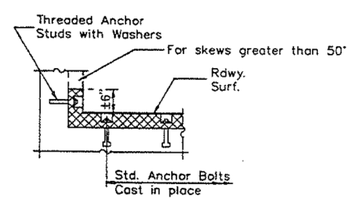

AT WALL

10/27/03 01:31:46 P.M. NEOPRENE.DWG
0486 & 0487 NEOPRENE EXPANSION JOINT DETAILS

19
EXAMINED
ENGINEER OF BRIDGE DESIGN
PASSED
ENGINEER OF BRIDGES AND STRUCTURES
APPROVED
DIRECTOR OF HIGHWAYS

ILLINOIS DEPARTMENT OF TRANSPORTATION

NEOPRENE EXPANSION JOINT

BRIDGE REPAIRS
1ST AVE (IL 171) S.N. 016-0486 & 016-0487
OVER SANITARY & SHIP CANAL
AND RAMP "E"

F.A.U. RT. 1505
COOK CO. IL.
STA. 30+72.59
STA. 35+12.88

SECTION 0707-626B (BR)

X:\100005\10093\Eng_Docs_Phase_II\SN_016_0486_0487_1st_Ave_over_Canal\Final\0486\0160486_60J16_X43_exist_neoprene.dgn
3:00:51 PM
6/23/2014

benesch
engineers · scientists · planners
Alfred Benesch & Company
205 North Michigan Avenue, Suite 2400
Chicago, Illinois 60601
312-565-0450 Job No. 10093

FOR INFORMATION ONLY

FILE NAME = 0160486_60J16_X43_exist_neoprene.dgn	USER NAME = tjanicke	DESIGNED - FSM	REVISED -
		CHECKED - RMM	REVISED -
	PLOT SCALE =	DRAWN - FSM	REVISED -
	PLOT DATE = 6/23/2014	CHECKED - RMM	REVISED -

STATE OF ILLINOIS
DEPARTMENT OF TRANSPORTATION

EXISTING PLANS (1993) - NEOPRENE DETAILS
STRUCTURE NO. 016-0486

SHEET NO. SGX43 OF SGX48 SHEETS

F.A.P. RTE.	SECTION	COUNTY	TOTAL SHEETS	SHEET NO.
373	2013-038B-R	COOK	821	733
		CONTRACT NO. 60J16		
		ILLINOIS FED. AID PROJECT		

ROUTE NO.	SECTION	COUNTY	TOTAL SHEETS	SHEET NO.
IL 171	* *	COOK	883	276
		ILLINOIS	FED. AID PROJECT	

* * SECTION 0707-626B (BR)

NOTES: DIAPHRAGM REMOVAL AND REPLACEMENT MAY BE REQUIRED TO FACILITATE DRILLING HOLES IN THE BOTTOM FLANGE FOR BEARING ATTACHMENT. COST IS INCIDENTAL TO "FURNISHING AND ERECTING STRUCTURAL STEEL".

NEW STEEL EXTENSIONS, SIDE RETAINERS, LEAD PLATES, CONNECTION BOLTS AND ANCHOR BOLTS ARE INCLUDED IN "FURNISHING AND ERECTING STRUCTURAL STEEL".

SEE SHEET 52 OF 52 FOR ANCHOR BOLT INSTALLATION.

BEFORE INSTALLING THE NEW BEARING, THE TOP PLATE OF THE EXISTING BEARING ASSEMBLY SHALL BE REMOVED FROM THE BOTTOM FLANGE USING THE AIR-ARC METHOD. GRIND SMOOTH ALL WELD MATERIAL REMAINING ON THE BOTTOM FLANGE. BURN EXISTING ANCHOR BOLTS FLUSH WITH EXISTING CONCRETE SURFACE. GRIND EXISTING ANCHOR BOLT SMOOTH AND SEAL WITH EPOXY. COST IS INCIDENTAL TO FURNISHING AND ERECTING STRUCTURAL STEEL.

TRAFFIC SHALL BE REMOVED FROM THE PORTION OF THE STRUCTURE TO BE JACKED PRIOR TO COMMENCING JACKING OPERATIONS. TRAFFIC SHALL BE KEPT OFF THAT PORTION OF THE STRUCTURE DURING THE ENTIRE BEARING REPLACEMENT OPERATION. DIFFERENTIAL JACKING HEIGHT NOT TO EXCEED 1/8" TRANSVERSELY BETWEEN ADJACENT BEAMS OR 1/4" LONGITUDINALLY BETWEEN ADJACENT SUPPORTS.

PRIOR TO ORDERING ANY MATERIAL, THE CONTRACTOR SHALL VERIFY IN THE FIELD ALL BEARING HEIGHT AND SHIM DIMENSIONS.

SEE SUPERSTRUCTURE OVERLAY & REPAIR PLANS FOR BEAM LOCATIONS.

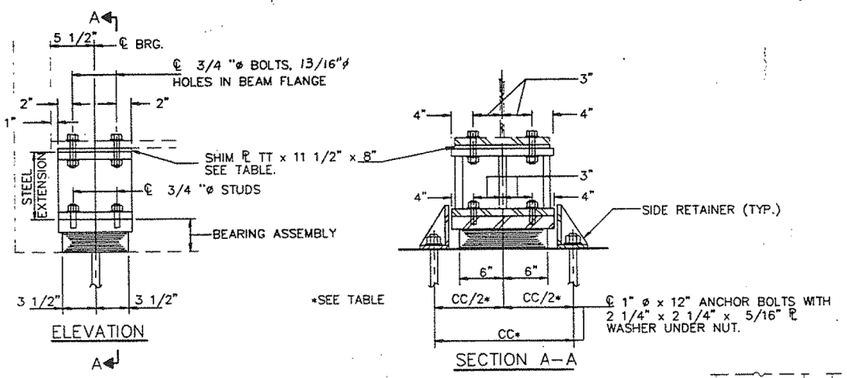

TYPE I ELASTOMERIC EXP. BRG.

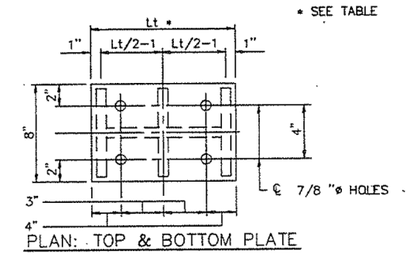

PLAN: TOP & BOTTOM PLATE

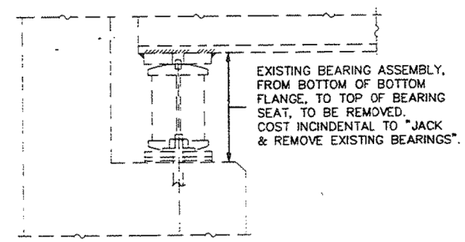

EXISTING ELEVATION

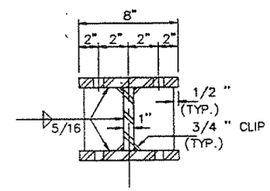

SECTION B-B

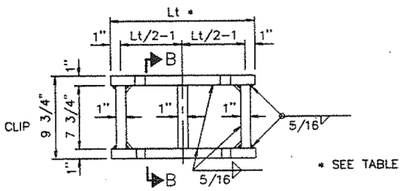

STEEL EXTENSION DETAIL

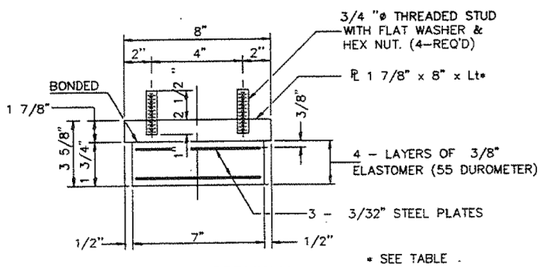

BEARING ASSEMBLY

NOTE: SHIM PLATES SHALL NOT BE PLACED UNDER BEARING ASSEMBLY.

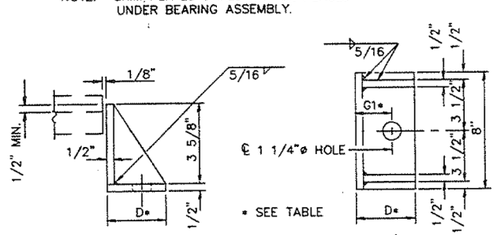

SIDE RETAINER

EQUIVALENT ROLLED ANGLE WITH STIFFENERS WILL BE ALLOWED IN LIEU OF WELDED PLATES.

SHIM ℞ THICKNESS, TT: SIZES SHOWN ARE IN ADDITION TO THE 1/8" SHIM ℞ TO BE FURNISHED @ ALL LOCATIONS.												
LOCATION	DIM.	EAST BOUND				RAMP F	LOCATION	WEST BOUND				
BEAM		EAST ABUTMENT	PIER 2 EAST	PIER 5 WEST	PIER 7 EAST	WEST ABUTMENT	BEAM	EAST ABUTMENT	PIER 13 EAST	PIER 16 WEST	PIER 18 EAST	
A-E	(IN.)	1/8	1/8			1/8	I-K	1/8	1/8			
F	(IN.)	9/16	9/16	5/8	1/8		L	1/8	1/8	0	0	
G	(IN.)	1/2	9/16	1/4	0		M	1/4	1/4	3/8	5/16	
H	(IN.)	1/4	5/16	5/8	5/8		N	1/8	1/8	13/16	1/8	
I	(IN.)			5/8	7/8		O			13/16	5/16	
J	(IN.)			3/4	3/8		P			1/8	5/8	
K	(IN.)			9/16	5/16		Q			1/8	11/16	
REACTIONS												
DL	(K)	21.7	21.7	23.6	27.4	31		20.1	20.1	23.6	27.4	
LL	(K)	40.2	40.2	37.7	37.7	33.4		37.4	37.4	37.7	37.7	
IMP	(K)	11.4	11.4	10.4	10.4	8.9		10.8	10.8	10.4	10.4	
TOTAL	(K)	73.3	73.3	71.7	75.5	73.3		68.3	68.3	71.7	75.5	
VARIABLE DIMENSIONS:												
BEAMS		A-H	A-H	F,G	H-K	F-K	A-E	I-N	I-N	L,M	N-O	L-O
CC	(IN.)	22 1/2	22 1/2	27	21 1/2	19 1/2	21 1/2	22 1/2	22 1/2	27	21 1/2	19 1/2
G1	(IN.)	4 1/8	4 1/8	5 7/8	3 1/8	2 1/8	3 5/8	4 1/8	4 1/8	5 7/8	3 1/8	2 1/8
D	(IN.)	6	6	7 3/4	5	4	5 1/2	6	6	7 3/4	5	4
Lt		1'-2"	1'-2"	1'-3"		1'-3"	1'-2"	1'-2"	1'-2"	1'-3"		1'-3"
OFFSET	(IN.)	0	0	0		1 1/2"				0		2

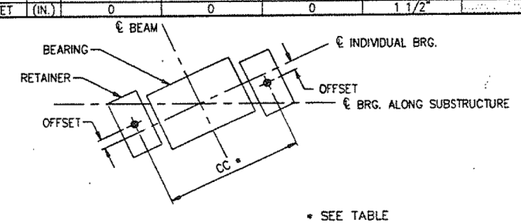

* SEE TABLE

BILL OF MATERIAL

ITEM	UNIT	TOTAL
ELASTOMERIC BEARING ASSEMBLY TYPE I	EACH	57
JACK & REMOVE EXISTING BEARINGS	EACH	57
FURNISH & ERECT STRUCTURAL STEEL	LBS	10400

ILLINOIS DEPARTMENT OF TRANSPORTATION

EAST ABUTMENTS
PIERS 2, 7, 13, & 18 EAST
PIERS 5 & 16 WEST
RAMP F, WEST ABUTMENT
7 X 12, TYPE I BEARINGS

BRIDGE REPAIRS
1ST AVE (IL 171) S.N. 016-0486 & 016-0487
OVER SANITARY & SHIP CANAL
AND RAMP "E"

F.A.U. RT. 1505
COOK CO. IL
STA. 30+72.59
STA. 35+12.88

SECTION 0707-626B (BR)

10-25-93

11/01/93 03:18:57 P.M. 7X12T1.DWG
7 X 12 TYPE 1 BEARINGS

19
EXAMINED
ENGINEER OF BRIDGE DESIGN
PASSED
ENGINEER OF BRIDGES AND STRUCTURES
APPROVED
DIRECTOR OF HIGHWAYS

X:\100005\10093\Eng_Docs_Phase_II\SN_016_0486_60J16_X44_exist_93_brgl.dgn 3:01:01 PM 6/23/2014

benesch
engineers · scientists · planners
Alfred Benesch & Company
205 North Michigan Avenue, Suite 2400
Chicago, Illinois 60601
312-565-0450 Job No. 10093

FOR INFORMATION ONLY

FILE NAME =	USER NAME = tjanicke	DESIGNED - FSM	REVISED -
		CHECKED - RMM	REVISED -
0160486_60J16_X44_exist_93_brgl.dgn	PLOT SCALE =	DRAWN - FSM	REVISED -
	PLOT DATE = 6/23/2014	CHECKED - RMM	REVISED -

STATE OF ILLINOIS
DEPARTMENT OF TRANSPORTATION

EXISTING PLANS (1993) – BEARING DETAILS TYPE I
STRUCTURE NO. 016-0486

SHEET NO. SGX44 OF SGX48 SHEETS

F.A.P. RTE.	SECTION	COUNTY	TOTAL SHEETS	SHEET NO.
373	2013-038B-R	COOK	821	734
		CONTRACT NO. 60J16		
		ILLINOIS FED. AID PROJECT		

ROUTE NO.	SECTION	COUNTY	TOTAL SHEETS	SHEET NO.
IL 171	**	COOK	833	277
		ILLINOIS	FED. AID PROJECT	

** SECTION 0707-626B (BR)

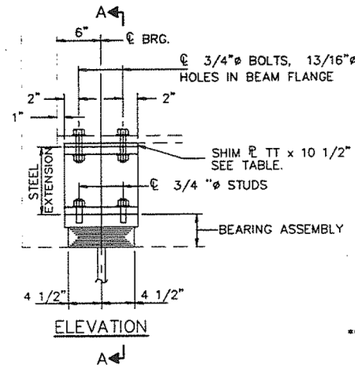

ELEVATION

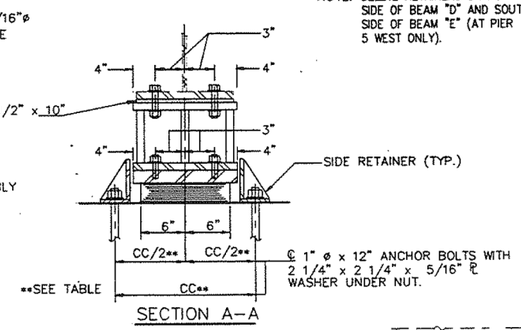

SECTION A–A

TYPE I ELASTOMERIC EXP. BRG.

NOTE: DELETE RETAINERS ON NORTH SIDE OF BEAM "D" AND SOUTH SIDE OF BEAM "E" (AT PIER 5 WEST ONLY).

NOTES: DIAPHRAGM REMOVAL AND REPLACEMENT MAY BE REQUIRED TO FACILITATE DRILLING HOLES IN THE BOTTOM FLANGE FOR BEARING ATTACHMENT. COST IS INCIDENTAL TO "FURNISHING AND ERECTING STRUCTURAL STEEL".

NEW STEEL EXTENSIONS, SIDE RETAINERS, LEAD PLATES, CONNECTION BOLTS AND ANCHOR BOLTS ARE INCLUDED IN "FURNISHING AND ERECTING STRUCTURAL STEEL".

SEE SHEET 52 OF 52 FOR ANCHOR BOLT INSTALLATION.

BEFORE INSTALLING THE NEW BEARING, THE TOP PLATE OF THE EXISTING BEARING ASSEMBLY SHALL BE REMOVED FROM THE BOTTOM FLANGE USING THE AIR-ARC METHOD. GRIND SMOOTH ALL WELD MATERIAL REMAINING ON THE BOTTOM FLANGE. BURN EXISTING ANCHOR BOLTS FLUSH WITH EXISTING CONCRETE SURFACE. GRIND EXISTING ANCHOR BOLT SMOOTH AND SEAL WITH EPOXY. COST IS INCIDENTAL TO FURNISHING AND ERECTING STRUCTURAL STEEL.

TRAFFIC SHALL BE REMOVED FROM THE PORTION OF THE STRUCTURE TO BE JACKED PRIOR TO COMMENCING JACKING OPERATIONS. TRAFFIC SHALL BE KEPT OFF THAT PORTION OF THE STRUCTURE DURING THE ENTIRE BEARING REPLACEMENT OPERATION. DIFFERENTIAL JACKING HEIGHT NOT TO EXCEED 1/8" TRANSVERSELY BETWEEN ADJACENT BEAMS OR 1/4" LONGITUDINALLY BETWEEN ADJACENT SUPPORTS.

PRIOR TO ORDERING ANY MATERIAL, THE CONTRACTOR SHALL VERIFY IN THE FIELD ALL BEARING HEIGHT AND SHIM DIMENSIONS.

SEE SUPERSTRUCTURE OVERLAY & REPAIR PLANS FOR BEAM LOCATIONS.

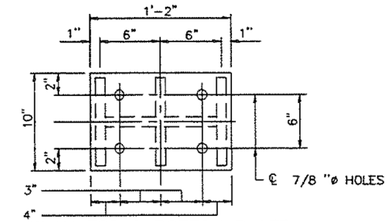

PLAN TOP & BOTTOM PLATE

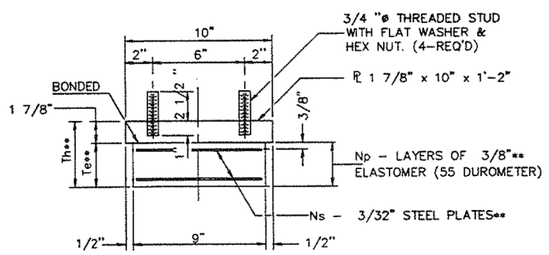

BEARING ASSEMBLY

**SEE TABLE

NOTE: SHIM PLATES SHALL NOT BE PLACED UNDER BEARING ASSEMBLY.

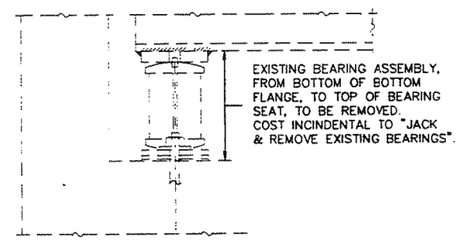

EXISTING ELEVATION

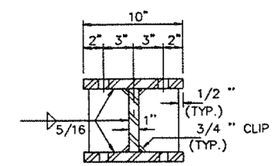

SECTION B–B

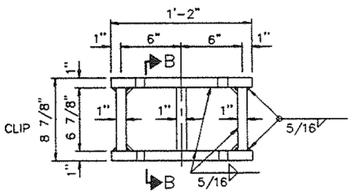

STEEL EXTENSION DETAIL

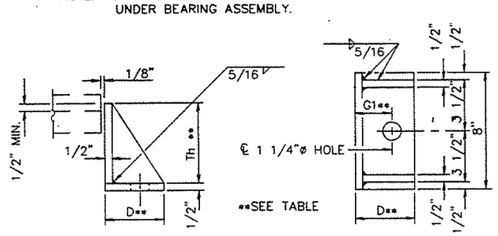

SIDE RETAINER

EQUIVALENT ROLLED ANGLE WITH STIFFENERS WILL BE ALLOWED IN LIEU OF WELDED PLATES.

LOCATION / BEAM	DIM.	SHIM ℙ THICKNESS, TT: * EAST BOUND PIER 5 WEST RAMP F	WEST BOUND LOCATION / BEAM	PIER 16 EAST
A	(IN.)	1/2	I	3/16
B	(IN.)	1/2	J	3/16
C	(IN.)	1/2	K	3/16
D	(IN.)	1/2	L	3/16
E	(IN.)	1/2	M	3/16
REACTIONS				
DL	(K)	42.9		34.0
LL	(K)	37.0		50.2
IMP	(K)	10.0		11.2
TOTAL	(K)	89.9		95.4
VARIABLE DIMENSIONS:				
BEARING TYPE		9x12,I,o		9x12,I,b
CC	(IN.)	21 1/2		23
G1	(IN.)	3 5/8		4 3/8
D	(IN.)	5 1/2		6 1/4
Np	(IN.)	5		7
Ns	(IN.)	4		6
Te	(IN.)	2 1/4		3 3/16
Th	(IN.)	4 1/8		5 1/16

* SIZES SHOWN ARE IN ADDITION TO THE 1/8" SHIM ℙ TO BE FURNISHED AT ALL LOCATIONS

BILL OF MATERIAL

ITEM	UNIT	TOTAL
ELASTOMERIC BEARING ASSEMBLY TYPE I	EACH	10
JACK & REMOVE EXISTING BEARINGS	EACH	10
FURNISH & ERECT STRUCTURAL STEEL	LBS	2090

ILLINOIS DEPARTMENT OF TRANSPORTATION

RAMP F, PIER 5 WEST
PIER 16 EAST
9 X 12,TYPE I BEARINGS

BRIDGE REPAIRS
1ST AVE (IL 171) S.N. 016-0486 & 016-0487
OVER SANITARY & SHIP CANAL
AND RAMP "E"

F.A.U. RT. 1505
COOK CO. IL
STA. 30+72.59
STA. 35+12.88

SECTION 0707-626B (BR)

12/03/93 04:25:21 P.M. 9X12TI.DWG 9 X 12 TYPE I BEARINGS

19
EXAMINED
ENGINEER OF BRIDGE DESIGN
PASSED
ENGINEER OF BRIDGES AND STRUCTURES
APPROVED
DIRECTOR OF HIGHWAYS

benesch
engineers · scientists · planners

Alfred Benesch & Company
205 North Michigan Avenue, Suite 2400
Chicago, Illinois 60601
312-565-0450 Job No. 10093

FOR INFORMATION ONLY

FILE NAME = 0160486_60J16_X45_exist_93_brgrampf.dgn	USER NAME = tjanicke	DESIGNED - FSM	REVISED -
		CHECKED - RMM	REVISED -
	PLOT SCALE =	DRAWN - FSM	REVISED -
	PLOT DATE = 6/23/2014	CHECKED - RMM	REVISED -

STATE OF ILLINOIS
DEPARTMENT OF TRANSPORTATION

EXISTING PLANS (1993) – BEARING DETAILS RAMP F
STRUCTURE NO. 016-0486

SHEET NO. SGX45 OF SGX48 SHEETS

F.A.P. RTE.	SECTION	COUNTY	TOTAL SHEETS	SHEET NO.
373	2013-038B-R	COOK	821	735
		CONTRACT NO. 60J16		
		ILLINOIS FED. AID PROJECT		

6/23/2014 3:01:10 PM X:\10000S\10093\Eng_Docs_Phase_II\SN_016_0486_0487_1st_Ave_over_Canal\Final\0486_60J16_X45_exist_93_brgrampf.dgn

ROUTE NO.	SECTION	COUNTY	TOTAL SHEETS	SHEET NO.
IL 171	* *	COOK	363	278
		ILLINOIS	FED. AID PROJECT	

* * SECTION 0707-626B (BR)

NOTES: DIAPHRAGM REMOVAL AND REPLACEMENT MAY BE REQUIRED TO FACILITATE DRILLING HOLES IN THE BOTTOM FLANGE FOR BEARING ATTACHMENT. COST IS INCIDENTAL TO "FURNISHING AND ERECTING STRUCTURAL STEEL".

NEW STEEL EXTENSIONS, SIDE RETAINERS, LEAD PLATES, CONNECTION BOLTS AND ANCHOR BOLTS ARE INCLUDED IN "FURNISHING AND ERECTING STRUCTURAL STEEL".

SEE SHEET 52 OF 52 FOR ANCHOR BOLT INSTALLATION.

BEFORE INSTALLING THE NEW BEARING, THE TOP PLATE OF THE EXISTING BEARING ASSEMBLY SHALL BE REMOVED FROM THE BOTTOM FLANGE USING THE AIR-ARC METHOD. GRIND SMOOTH ALL WELD MATERIAL REMAINING ON THE BOTTOM FLANGE. BURN EXISTING ANCHOR BOLTS FLUSH WITH EXISTING CONCRETE SURFACE. GRIND EXISTING ANCHOR BOLT SMOOTH AND SEAL WITH EPOXY. COST IS INCIDENTAL TO FURNISHING AND ERECTING STRUCTURAL STEEL.

TRAFFIC SHALL BE REMOVED FROM THE PORTION OF THE STRUCTURE TO BE JACKED PRIOR TO COMMENCING JACKING OPERATIONS. TRAFFIC SHALL BE KEPT OFF THAT PORTION OF THE STRUCTURE DURING THE ENTIRE BEARING REPLACEMENT OPERATION. DIFFERENTIAL JACKING HEIGHT NOT TO EXCEED 1/8" TRANSVERSELY BETWEEN ADJACENT BEAMS OR 1/4" LONGITUDINALLY BETWEEN ADJACENT SUPPORTS.

PRIOR TO ORDERING ANY MATERIAL, THE CONTRACTOR SHALL VERIFY IN THE FIELD ALL BEARING HEIGHT AND SHIM DIMENSIONS.

SEE SUPERSTRUCTURE OVERLAY & REPAIR PLANS FOR BEAM LOCATIONS.

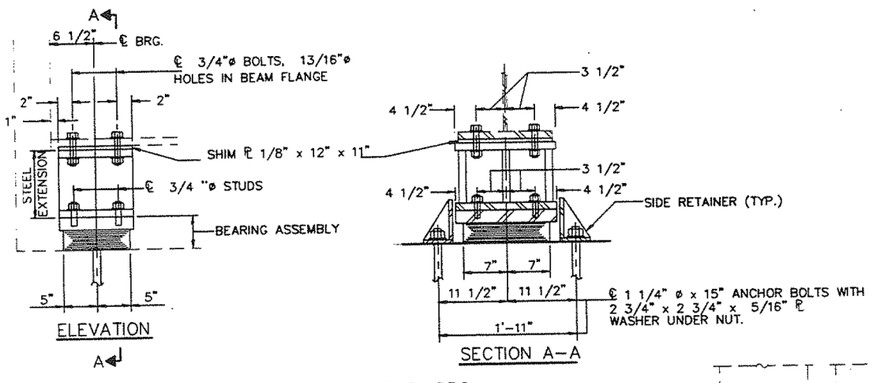

TYPE I ELASTOMERIC EXP. BRG.

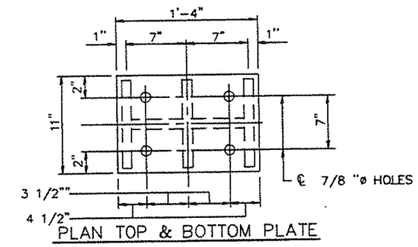

PLAN TOP & BOTTOM PLATE

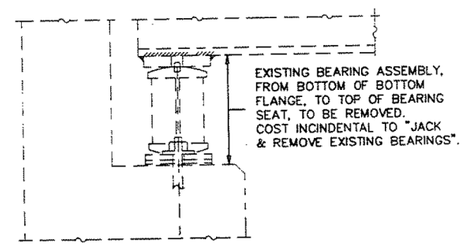

EXISTING ELEVATION

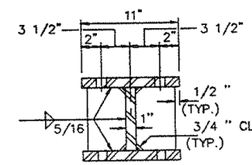

SECTION B-B

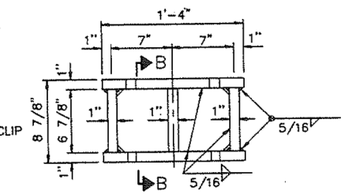

STEEL EXTENSION DETAIL

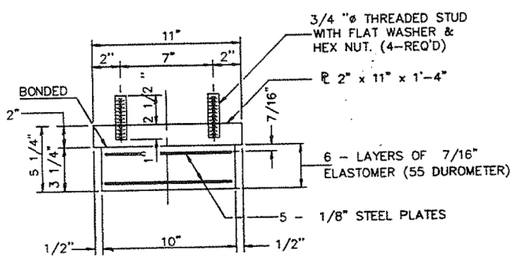

BEARING ASSEMBLY

NOTE: SHIM PLATES SHALL NOT BE PLACED UNDER BEARING ASSEMBLY.

REACTIONS		PIER 5 EAST
R D	(K)	38.1
R L	(K)	57.3
IMP.	(K)	12.7
R (TOTAL)	(K)	108.1

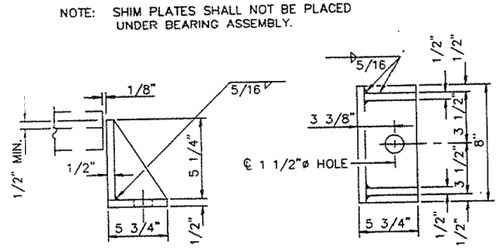

SIDE RETAINER

EQUIVALENT ROLLED ANGLE WITH STIFFENERS WILL BE ALLOWED IN LIEU OF WELDED PLATES.

BILL OF MATERIAL

ITEM	UNIT	TOTAL
ELASTOMERIC BEARING ASSEMBLY TYPE I	EACH	8
JACK & REMOVE EXISTING BEARINGS	EACH	8
FURNISH & ERECT STRUCTURAL STEEL	LBS	1900

ILLINOIS DEPARTMENT OF TRANSPORTATION

PIER 5 EAST
10 X 14, TYPE I BEARINGS
BRIDGE REPAIRS
1ST AVE (IL 171) S.N. 016-0486 & 016-0487
OVER SANITARY & SHIP CANAL AND RAMP "E"

F.A.U. RT. 1505
COOK CO. IL
STA. 30+72.59
STA. 35+12.88

SECTION 0707-626B (BR

10-25-93

12/03/93 04:21:35 P.M. 10X14TI.DWG 10 X 14 TYPE I BEARINGS

19
EXAMINED
ENGINEER OF BRIDGE DESIGN
PASSED
ENGINEER OF BRIDGES AND STRUCTURES
APPROVED
DIRECTOR OF HIGHWAYS

benesch
engineers · scientists · planners
Alfred Benesch & Company
205 North Michigan Avenue, Suite 2400
Chicago, Illinois 60601
312-565-0450 Job No. 10093

FOR INFORMATION ONLY

FILE NAME =	USER NAME = tjanicke	DESIGNED - FSM	REVISED -	STATE OF ILLINOIS DEPARTMENT OF TRANSPORTATION	EXISTING PLANS (1993) - BEARING DETAILS PIER 5 STRUCTURE NO. 016-0486	F.A.P. RTE.	SECTION	COUNTY	TOTAL SHEETS	SHEET NO.
		CHECKED - RMM	REVISED -			373	2013-038B-R	COOK	821	736
0160486_60J16_X46_exist_93_brgp5.dgn	PLOT SCALE =	DRAWN - FSM	REVISED -					CONTRACT NO. 60J16		
	PLOT DATE = 6/23/2014	CHECKED - RMM	REVISED -		SHEET NO. SGX46 OF SGX48 SHEETS			ILLINOIS FED. AID PROJECT		

X:\10000S\10093\Eng_Docs_Phase_II\SN_016_0486_0487_1st_Ave_over_Canal\Final_0486\0160486_60J16_X46_exist_93_brgp5.dgn 3:01:20 PM 6/23/2014

ROUTE NO.	SECTION	COUNTY	TOTAL SHEETS	SHEET NO.
IL 171	* *	COOK	255	250
		ILLINOIS	FED. AID PROJECT	

* * SECTION 0707-626 B (BR)

NOTES: DIAPHRAGM REMOVAL AND REPLACEMENT MAY BE REQUIRED TO FACILITATE DRILLING HOLES IN THE BOTTOM FLANGE FOR BEARING ATTACHMENT. COST IS INCIDENTAL TO "FURNISHING AND ERECTING STRUCTURAL STEEL".

NEW STEEL EXTENSIONS, SIDE RETAINERS, LEAD PLATES, CONNECTION BOLTS AND ANCHOR BOLTS ARE INCLUDED IN "FURNISHING AND ERECTING STRUCTURAL STEEL".

SEE SHEET 52 OF 52 FOR ANCHOR BOLT INSTALLATION.

BEFORE INSTALLING THE NEW BEARING, THE TOP PLATE OF THE EXISTING BEARING ASSEMBLY SHALL BE REMOVED FROM THE BOTTOM FLANGE USING THE AIR-ARC METHOD. GRIND SMOOTH ALL WELD MATERIAL REMAINING ON THE BOTTOM FLANGE. BURN EXISTING ANCHOR BOLTS FLUSH WITH EXISTING CONCRETE SURFACE. GRIND EXISTING ANCHOR BOLT SMOOTH AND SEAL WITH EPOXY. COST IS INCIDENTAL TO FURNISHING AND ERECTING STRUCTURAL STEEL.

TRAFFIC SHALL BE REMOVED FROM THE PORTION OF THE STRUCTURE TO BE JACKED PRIOR TO COMMENCING JACKING OPERATIONS. TRAFFIC SHALL BE KEPT OFF THAT PORTION OF THE STRUCTURE DURING THE ENTIRE BEARING REPLACEMENT OPERATION. DIFFERENTIAL JACKING HEIGHT NOT TO EXCEED 1/8" TRANSVERSELY BETWEEN ADJACENT BEAMS OR 1/4" LONGITUDINALLY BETWEEN ADJACENT SUPPORTS.

PRIOR TO ORDERING ANY MATERIAL, THE CONTRACTOR SHALL VERIFY IN THE FIELD ALL BEARING HEIGHT AND SHIM DIMENSIONS.

SEE SUPER STRUCTURE OVERLAY & REPAIR PLANS FOR BEAM LOCAATIONS.

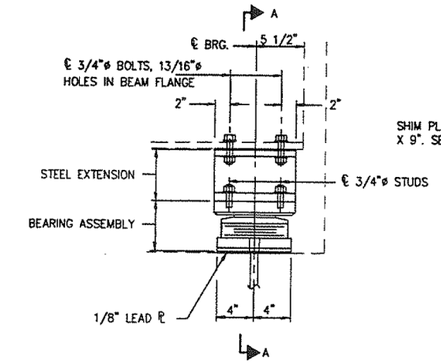

ELEVATION

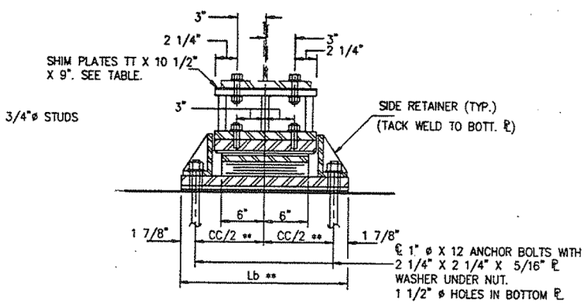

SECTION A-A

TYPE II TFE ELASTOMERIC EXP. BRG.

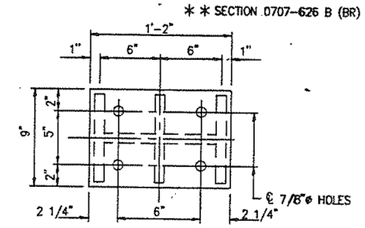

PLAN TOP & BOTTOM PLATES

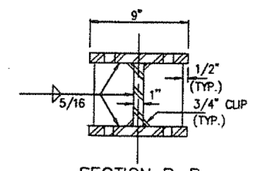

SECTION B-B

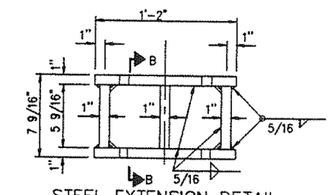

STEEL EXTENSION DETAIL

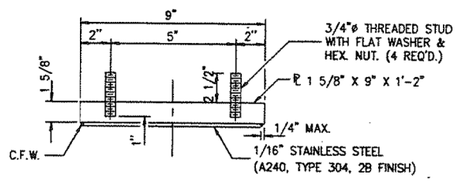

TOP BEARING ASSEMBLY

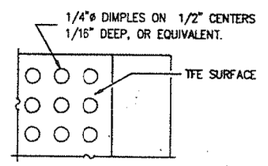

PLAN-TFE SURFACE

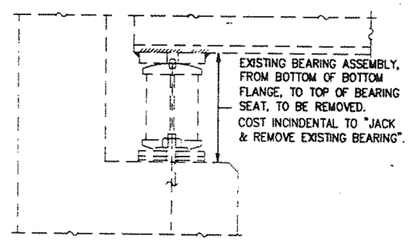

EXISTING ELEVATION

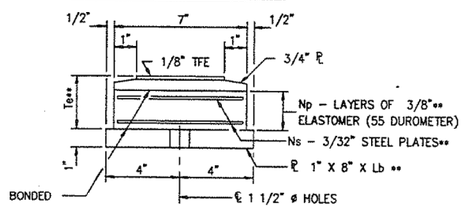

BOTTOM BEARING ASSEMBLY

** SEE TABLE

NOTE: THE 1/8 " TFE SHEET SHALL BE BONDED DIRECTLY TO THE TOP STEEL PLATE WITH A TWO-COMPONENT, MEDIUM VISCOSITY EPOXY RESIN, CONFORMING TO THE REQUIREMENTS OF THE FEDERAL SPECIFICATION MMM-A-134, TYPE I. THE BOND AGENT SHALL BE APPLIED ON THE FULL AREA OF THE CONTACT SURFACES.

BONDING OF 1/8 " TFE SHEET DURING VULCANIZING PROCESS WILL BE PERMITTED PROVIDED THE PROCESS AND METHOD OF ADJUSTING ASSEMBLY HEIGHT IS APPROVED BY THE ENGINEER.

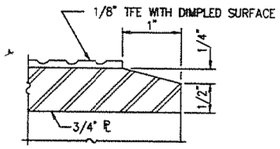

SECTION THRU TFE

LOCATION / BEAM	DIM.	SHIM ℙ THICKNESS, TT: * EAST BOUND PIER 7 WEST	EAST BOUND WEST ABUTMENT	LOCATION BEAM	WEST BOUND PIER 18 WEST
B1	(IN.)	0	1/2	B7	1/2
B2	(IN.)	0	1/2	B8	1/2
B3	(IN.)	0	1/2	B9	13/16
B4	(IN.)	3/4	1 1/4	B10	1
B5	(IN.)	1/8	5/8	B11	1/2
B6	(IN.)	0	1/2	B12	1/2
REACTIONS					
DL	(K)	14.6	15.7		20.2
LL	(K)	34.0	34.0		33.0
IMP	(K)	10.0	10.0		9.0
TOTAL	(K)	58.6	59.7		62.2
VARIABLE DIMENSIONS:					
BEARING TYPE		7x12,II,C	7x12,II,B		7x12,II,B
Np	(IN.)	5	4		4
Ns	(IN.)	4	3		3
Te	(IN.)	3 1/8	2 5/8		2 5/8
CC	(IN.)	18 1/2	19 1/4		18 1/2
Lb	(IN.)	22 1/4	23		22 1/4
G1	(IN.)	2 1/8	2 1/2		2 1/8
D	(IN.)	4	4 3/8		4

* IN ADDITION TO 1/8" SHIMS TO BE PROVIDED @ ALL BEARING LOCATIONS.

** SEE TABLE

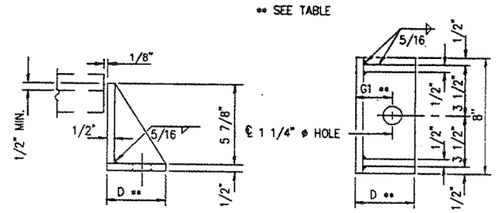

SIDE RETAINER

EQUIVALENT ROLLED ANGLE WITH STIFFENERS WILL BE ALLOWED IN LIEU OF WELDED PLATES.

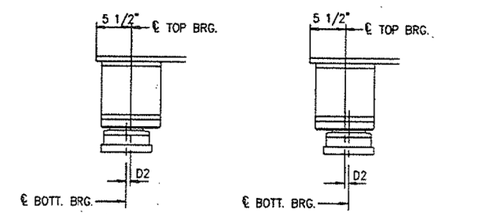

BELOW 50°F. (MOVE BOTT. BRG. AWAY FROM FIXED BRG.)

ABOVE 50°F. (MOVE BOTT. BRG. TOWARD FIXED BRG.)

SETTING ANCHOR BOLTS AT EXP. BRG.

D2= 1/8 " PER EACH 100' OF EXPANSION FOR EVERY 15° TEMP. CHANGE FROM THE NORMAL TEMP. OF 50°F.

BILL OF MATERIAL

ITEM	UNIT	TOTAL
ELASTOMERIC BEARING ASSEMBLY TYPE II	EACH	18
JACK & REMOVE EXISTING BEARINGS	EACH	18
FURNISH & ERECT STRUCTURAL STEEL	LBS	3410

ILLINOIS DEPARTMENT OF TRANSPORTATION

PIER 7 WEST, WEST ABUTMENT (EAST BOUND), PIER 18 WEST
7 X 12, TYPE II BEARINGS

BRIDGE REPAIRS
1ST AVE (IL 171) S.N. 016-0486 & 016-0487
OVER SANITARY & SHIP CANAL AND RAMP "E"

F.A.U. RT. 1505 — SECTION 0707-626 B (BR)
COOK CO. IL.
STA. 30+72.59
STA. 35+12.88

EXAMINED — 19
ENGINEER OF BRIDGE DESIGN
PASSED
ENGINEER OF BRIDGES AND STRUCTURES
APPROVED
DIRECTOR OF HIGHWAYS

12/01/93 08:35:06 A.M. 7X12T2.DWG 7 X 12, TYPE II BEARINGS

benesch engineers · scientists · planners
Alfred Benesch & Company
205 North Michigan Avenue, Suite 2400
Chicago, Illinois 60601
312-565-0450 Job No. 10093

FOR INFORMATION ONLY

FILE NAME = 0160486.60J16.X47.exist.93.brgII.dgn	USER NAME = tjanicke	DESIGNED - FSM	REVISED -
		CHECKED - RMM	REVISED -
	PLOT SCALE =	DRAWN - FSM	REVISED -
	PLOT DATE = 6/23/2014	CHECKED - RMM	REVISED -

STATE OF ILLINOIS
DEPARTMENT OF TRANSPORTATION

EXISTING PLANS (1993) - BEARING DETAILS TYPE II
STRUCTURE NO. 016-0486

SHEET NO. SGX47 OF SGX48 SHEETS

F.A.P. RTE.	SECTION	COUNTY	TOTAL SHEETS	SHEET NO.
373	2013-038B-R	COOK	821	737
		CONTRACT NO. 60J16		
		ILLINOIS FED. AID PROJECT		

6/23/2014 3:01:29 PM X:\100005\10093\Eng_Docs_Phase_II\SN_016_0486_0487_1st_Ave_over_Canal\Final\0486_0160486_60J16_X47_exist_93_brgII.dgn

ROUTE NO.	SECTION	COUNTY	TOTAL SHEETS	SHEET NO.
IL 171	**	COOK	383	282
		ILLINOIS	FED. AID PROJECT	

**SECTION 0707-626B (BR)

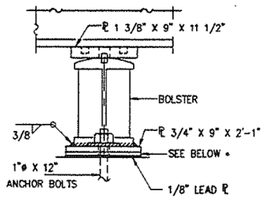

PIER 6: EAST & WEST BEARINGS

* SHIMS:
11/16" X 9" X 2'-1" @ PIER 6 EAST BEAM A
1/4" X 9" X 2'-1" @ PIER 6 WEST BEAM E

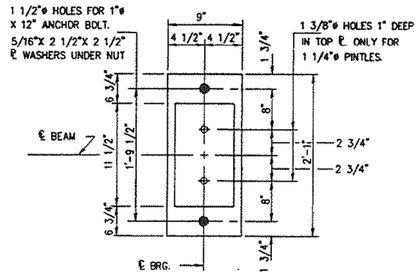

PLAN: BOLSTER

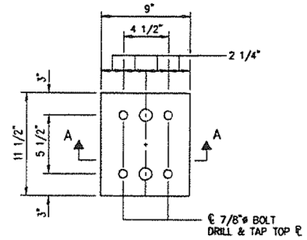

PLAN: TOP ℄

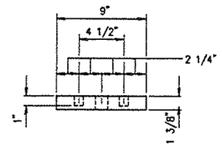

SECTION A-A

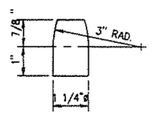

DETAIL OF PINTLE

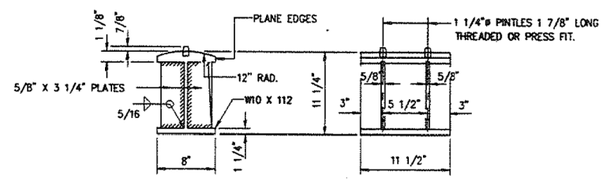

DETAIL OF BOLSTER
AT PIER 6: EAST AND WEST BEARINGS

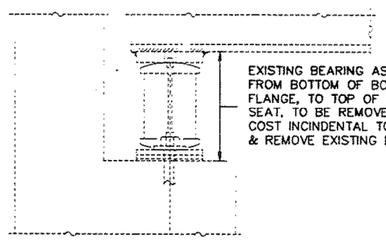

EXISTING ELEVATION

NOTES: DIAPHRAGM REMOVAL AND REPLACEMENT MAY BE REQUIRED TO FACILITATE DRILLING HOLES IN THE BOTTOM FLANGE FOR BEARING ATTACHMENT. COST IS INCIDENTAL TO "FURNISHING AND ERECTING STRUCTURAL STEEL".

NEW STEEL EXTENSIONS, SIDE RETAINERS, LEAD PLATES, CONNECTION BOLTS AND ANCHOR BOLTS ARE INCLUDED IN "FURNISHING AND ERECTING STRUCTURAL STEEL".

SEE SHEET 52 OF 52 FOR ANCHOR BOLT INSTALLATION.

BEFORE INSTALLING THE NEW BEARING, THE TOP PLATE OF THE EXISTING BEARING ASSEMBLY SHALL BE REMOVED FROM THE BOTTOM FLANGE USING THE AIR-ARC METHOD. GRIND SMOOTH ALL WELD MATERIAL REMAINING ON THE BOTTOM FLANGE. BURN EXISTING ANCHOR BOLTS FLUSH WITH EXISTING CONCRETE SURFACE. GRIND EXISTING ANCHOR BOLT SMOOTH AND SEAL WITH EPOXY. COST IS INCIDENTAL TO FURNISHING AND ERECTING STRUCTURAL STEEL.

TRAFFIC SHALL BE REMOVED FROM THE PORTION OF THE STRUCTURE TO BE JACKED PRIOR TO COMMENCING JACKING OPERATIONS. TRAFFIC SHALL BE KEPT OFF THAT PORTION OF THE STRUCTURE DURING THE ENTIRE BEARING REPLACEMENT OPERATION. DIFFERENTIAL JACKING HEIGHT NOT TO EXCEED 1/8" TRANSVERSELY BETWEEN ADJACENT BEAMS OR 1/4" LONGITUDINALLY BETWEEN ADJACENT SUPPORTS.

PRIOR TO ORDERING ANY MATERIAL, THE CONTRACTOR SHALL VERIFY IN THE FIELD ALL BEARING HEIGHT AND SHIM DIMENSIONS.

SEE SUPERSTRUCTURE OVERLAY & REPAIR PLANS FOR BEAM LOCATIONS.

BILL OF MATERIAL

ITEM	UNIT	TOTAL
JACK & REMOVE EXISTING BEARINGS	EACH	10
FURNISH & ERECT STRUCTURAL STEEL	LBS	2470

12/01/93 09:03:53 A.M. RFFXBRG.DWG RAMP F FIXED BEARINGS

19

EXAMINED

ENGINEER OF BRIDGE DESIGN

PASSED

ENGINEER OF BRIDGES AND STRUCTURES

APPROVED

DIRECTOR OF HIGHWAYS

ILLINOIS DEPARTMENT OF TRANSPORTATION

RAMP F – PIER 6
EAST AND WEST FIXED BEARINGS
BRIDGE REPAIRS
1ST AVE (IL 171) S.N. 016-0486 & 016-0487
OVER SANITARY & SHIP CANAL
AND RAMP "E"

F.A.U. RT. 1505
COOK CO. IL.
STA. 30+72.59
STA. 35+12.88

SECTION 0707-626B (BR)

X:\100005\10093\Eng_Docs_Phase_II\SN_016_0486_0487_1st_Ave_over_Canal\Final_0486\0160486_60J16_X48_exist_fixedbrg.dgn 3:01:39 PM 6/23/2014

benesch
engineers · scientists · planners
Alfred Benesch & Company
205 North Michigan Avenue, Suite 2400
Chicago, Illinois 60601
312-565-0450 Job No. 10093

FOR INFORMATION ONLY

FILE NAME =	USER NAME = tjanicke	DESIGNED - FSM	REVISED -
0160486_60J16_X48_exist_fixedbrg.dgn		CHECKED - RMM	REVISED -
	PLOT SCALE =	DRAWN - FSM	REVISED -
	PLOT DATE = 6/23/2014	CHECKED - RMM	REVISED -

STATE OF ILLINOIS
DEPARTMENT OF TRANSPORTATION

EXISTING PLANS (1993) – FIXED BEARINGS
STRUCTURE NO. 016-0486
SHEET NO. SGX48 OF SGX48 SHEETS

F.A.P. RTE.	SECTION	COUNTY	TOTAL SHEETS	SHEET NO.
373	2013-038B-R	COOK	821	738
		CONTRACT NO. 60J16		
		ILLINOIS FED. AID PROJECT		

Bench Marks: Chiseled square on SW corner of SB IL-171 bridge wing wall over IC RR. El. 629.23.

Existing Structure: S.N. 016-0488 (SB) was built in 1963 as F.A. Rte. 133, Section 0707-617 VB at Sta. 22+90.24. Existing dual structures each consist of three continuous span reinforced concrete decks on eight steel 30" WF beams in all three spans. The reinforced concrete deck is 7" thick, including a 2" microsilica concrete overlay. The abutments are reinforced concrete stub abutments founded on steel H-piles. Each pier is reinforced concrete consisting of a cap beam, multiple trapezoidal columns on a crashwall supported by a continuous spread footing on steel piles. The structure is 166'-6" back-to-back of abutments and the out-to-out deck width is 48'-0". Structure has a 12° 42' 19" skew. Traffic will be maintained utilizing crossovers. All Elevations in the proposed plans are based on NAVD88 Datum. Elevations in the existing plans are based on the NGVD29 Datum. NGVD29 Elev. 594.02 = NAVD88 Elev. 593.74.

No Salvage.

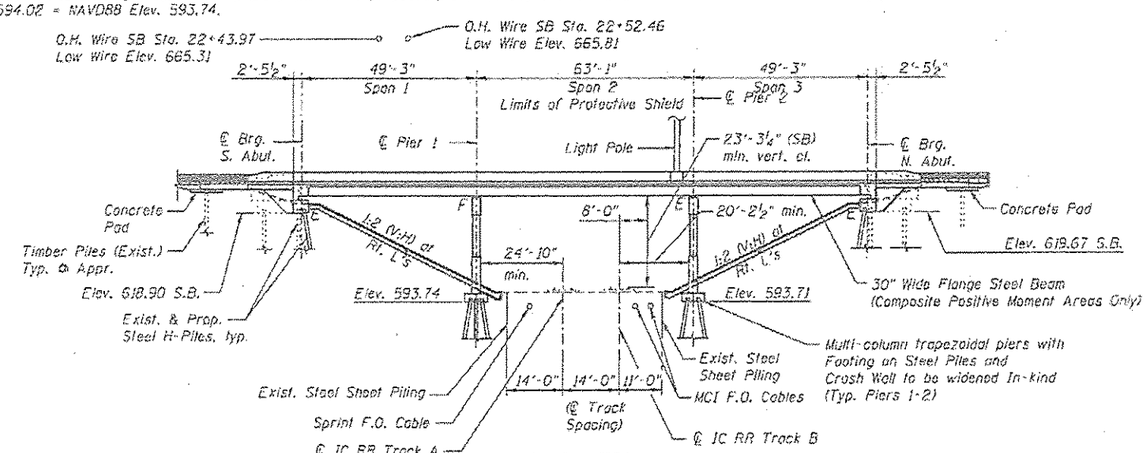

ELEVATION

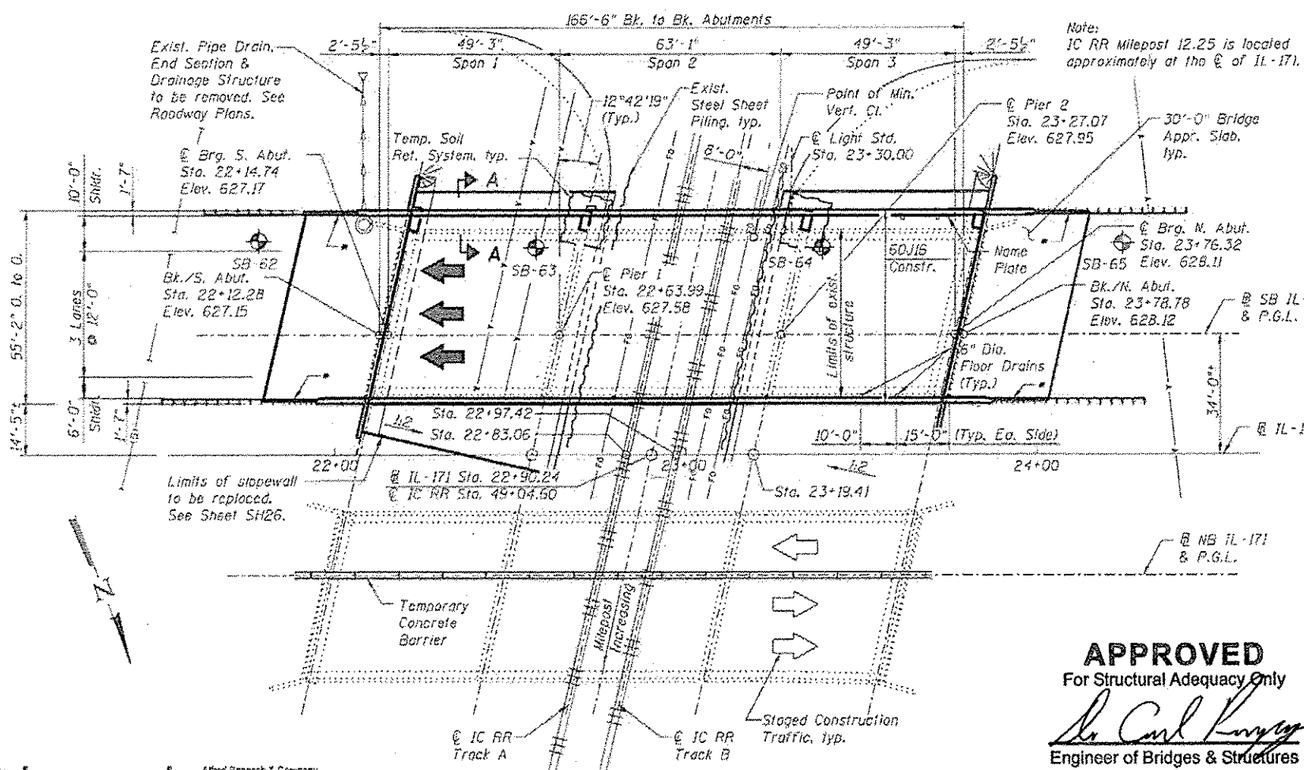

PLAN

Note:
IC RR Milepost 12.25 is located approximately at the ℄ of IL-171.

SCOPE OF WORK

1. Remove the existing concrete deck and microsilica concrete overlay and replace with new 8" reinforced concrete deck.
2. Widen abutments, piers, and slopewalls to the outside.
3. Remove and replace approach slabs and wingwalls as shown for new deck width and semi-integral abutments.
4. Add one additional steel beam line to outside of the structure.
5. Repair spalls, delaminations and open cracks in substructures using formed concrete repair and epoxy crack injection. Replace failed slopewall panels.
6. Remove and replace existing roadway lighting.
7. Retrofit cover plates on the top flanges of steel beams.
8. Perform miscellaneous repairs including debris/vegetation removal.
9. Re-set the steel expansion rocker bearings at Pier 2.
10. Remove existing backwalls and convert abutments to semi-integral.
11. Remove and dispose of existing electrical conduits and junction boxes attached to the beams and/or deck.

STA. 22+90.24
RE-BUILT 2011 BY
STATE OF ILLINOIS
F.A.P. RT. 373
SECTION 2013-038B-R
LOADING HS20-44
STR. NO. 016-0488

NAME PLATE

(See Std. 515001)

Existing Name Plate Shall be cleaned and relocated next to the new Name Plate. Cost included with Name Plates.

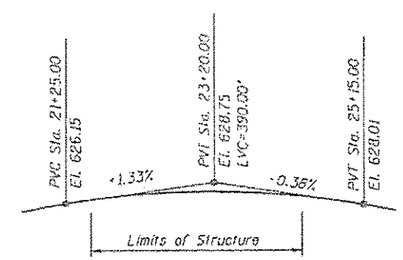

PROFILE GRADE SB IL-171

(Along @ SB IL-171)

NOTE:
For Section A-A, see Sheet SH2.

* Traffic Barrier Terminal Type 6 Std. 631031

DESIGN STRESSES

FIELD UNITS (New Construction)
f'c = 3,500 psi
fy = 60,000 psi (Reinforcement)
Fy = 50,000 psi (M270 Grade 50)

FIELD UNITS (Exist. Construction)
f'c = 3,500 psi
fy = 40,000 psi (Reinforcement)
Fy = 36,000 psi (Structural Steel)

SEISMIC DATA

Seismic Performance Category (SPC) = A
Bedrock Acceleration Coefficient (A) = 0.04g
Site Coefficient (S) = 1.0

LOADING HS20-44

No future wearing surface allowed.

DESIGN SPECIFICATIONS

2002 AASHTO Standard Specifications for Highway Bridges

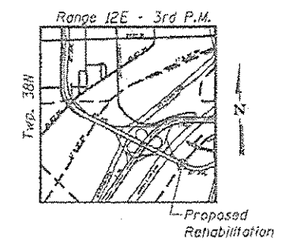

LOCATION SKETCH

KURT J. NAUS
081-0050
LICENSED
STRUCTURAL
ENGINEER
STATE OF ILLINOIS

EXPIRATION DATE 11-30-2014
DATE: 06-23-2014

EXISTING UTILITY LEGEND

- Underground Storm Sewer
- Aerial Electric Line
- Underground Gas Line
- Underground Fiber Optic Line
- Existing Drainage Structure

APPROVED
For Structural Adequacy Only
Engineer of Bridges & Structures

benesch
engineers · scientists · planners
Alfred Benesch & Company
205 North Michigan Avenue, Suite 2400
Chicago, Illinois 60601
312-565-6450 Job No. 10093

GENERAL PLAN AND ELEVATION
SB IL-171 OVER IC RR
FAP 373 - SECTION 2013-038B-R
COOK COUNTY
STATION 22+90.24
STRUCTURE NO. 016-0488

FILE NAME = 016-0488-60J16-001-General Plan and Elev	USER NAME = sjenkins	DESIGNED - CMK	REVISED -	STATE OF ILLINOIS DEPARTMENT OF TRANSPORTATION	SHEET NO. SH1 OF SH36 SHEETS
	PLOT SCALE =	CHECKED - JAW	REVISED -		
	PLOT DATE = 6/23/2013	DRAWN - CMK	REVISED -		
		CHECKED - JAW	REVISED -		

F.A.P. RTE.	SECTION	COUNTY	TOTAL SHEETS	SHEET NO.
373	2013-038B-R	COOK	821	739
		CONTRACT NO. 60J16		
		ILLINOIS FED. AID PROJECT		

X:\100093\10093\Eng_Docs_Phase_II\SN_016_0488_60J16_001_1st_Ave_over_IC_RR\Final\0488\016-0488-60J16-001-General Plan and Elevation.dgn
6/23/2014 3:01:50 PM

GENERAL NOTES:

1. Fasteners shall be ASTM A325 Type 1, mechanically galvanized bolts. Bolts $\frac{7}{8}$" dia., holes $\frac{15}{16}$" dia., unless otherwise noted.

2. Calculated weight of Structural Steel =
   M270 Grade 36: 1,330 lbs
   M270 Grade 50: 18,750 lbs

3. No field welding is permitted except as specified in the contract documents.

4. The Contractor shall test the existing welds by non-destructive methods within 2 ft. of the end of the existing cover plates for cracks after removal of the existing concrete deck. Dye penetrant (PT), magnetic particle (MT), or other approved testing method shall be performed by qualified personnel approved by the Engineer. If cracks are found, report them to the Bureau of Bridges and Structures for disposition. The cost of testing is included in Removal of Existing Concrete Deck. The cost of crack repair, if necessary, will be paid for according to Article 109.04 of the Standard Specifications.

5. Reinforcement bars designated (E) shall be epoxy coated.

6. Prior to pouring the new concrete deck and end diaphragms at the abutments, all heavy or loose rust, loose mill scale, and other loose or potentially detrimental foreign material shall be removed from the surfaces in contact with concrete. Tightly adhered paint may remain unless otherwise noted. Removal shall be accomplished by methods that will not damage the steel and the cost will be included in the pay item covering removal of the existing concrete.

   As directed by the Engineer, existing construction accessories welded to the top flange of beams and girders shall be removed. The weld areas shall be ground flush and inspected for cracks using magnetic particle testing (MT) or dye penetrant testing (PT) by qualified personnel approved by the Engineer. Any cracks that cannot be removed by grinding $\frac{1}{4}$ inch deep shall be identified and reported to the Bureau of Bridges and Structures for further disposition. The cost of removing welded accessories, grinding and inspecting weld areas and grinding cracks will be paid for according to Article 109.04 of the Standard Specifications.

7. If the Contractor elects to use cantilever forming brackets on the exterior beams or girders, the brackets shall be placed at the same locations as required for the hardwood blocks in Article 503.06(b) of the Standard Specifications. If additional cantilever forming brackets are required, hardwood blocking shall be wedged between the exterior and first interior beam at each of these additional bracket locations.

8. Plan dimensions and details relative to existing plans are subject to nominal construction variations. The Contractor shall field verify existing dimensions and details affecting new construction and make necessary approved adjustments prior to construction or ordering of materials. Such variations shall not be cause for additional compensation for a change in scope of the work, however, the Contractor will be paid for the quantity actually furnished at the unit price bid for the work.

9. Bearing seat surfaces shall be constructed or adjusted to the designated elevations within a tolerance of $\frac{1}{8}$ inch (0.01 ft.). Adjustment shall be made either by grinding the surface or by shimming the bearings.

10. The existing structural steel coating contains lead. The Contractor shall take appropriate precautions to deal with the presence of lead on this project.

11. The Inorganic Zinc Rich Primer / Acrylic / Acrylic Paint System shall be used for shop and field painting of new structural steel and the steel portions of new elastomeric bearings. Only Inorganic Zinc Rich Primer shall be applied to the new structural steel and the steel portions of the new elastomeric bearings in the shop under this contract and is included in "Furnishing and Erecting Structural Steel" and the elastomeric bearing pay items, respectively. The intermediate and top coats shall be applied under a separate painting contract.

12. Existing structural steel shall only be cleaned and painted as required by the Special Provision "Cleaning and Painting Contact Surface Areas of Existing Steel Structures".

13. The embankment configuration shown shall be the minimum that must be placed and compacted prior to construction of the abutments.

INDEX OF SHEETS

SH1	General Plan and Elevation
SH2	General Notes, Bill of Material, and Index of Sheets
SH3	Footing Layout
SH4	Stage Construction Details
SH5	Temporary Concrete Barrier for Stage Construction
SH6	Top of Slab Elevations Plan
SH7	Top of Slab Elevations (1 of 3)
SH8	Top of Slab Elevations (2 of 3)
SH9	Top of Slab Elevations (3 of 3)
SH10	Top of Approach Slab Elevations (1 of 2)
SH11	Top of Approach Slab Elevations (2 of 2)
SH12	Deck Reinforcement Plan
SH13	Superstructure Details (1 of 2)
SH14	Superstructure Details (2 of 2)
SH15	Concrete Parapet Slip Forming Option
SH16	Semi-Integral Abutment Diaphragm Details
SH17	Bridge Approach Slab Details (1 of 2)
SH18	Bridge Approach Slab Details (2 of 2)
SH19	Framing Plan
SH20	Structural Steel Details
SH21	Bearing Details (1 of 2)
SH22	Bearing Details (2 of 2)
SH23	Abutment Concrete Removal and Repair Details
SH24	North Abutment Widening Details
SH25	South Abutment Widening Details
SH26	Slopewall Repair Details
SH27	Pier Concrete Repair Details
SH28	Pier 1 Widening Details
SH29	Pier 2 Widening Details
SH30	HP Pile Details
SH31-SH36	Boring Logs

For existing bridge plans, see Sheets SHX1 thru SHX14 immediately following Sheet SH36.

TOTAL BILL OF MATERIAL

	ITEM	UNIT	SUPER	SUB	TOTAL
	Concrete Removal	Cu. Yd.		36.7	36.7
	Slope Wall Removal	Sq. Yd.		493	493
	Removal of Existing Concrete Deck	Each	1		1
	Protective Shield	Sq. Yd.	413		413
	Structure Excavation	Cu. Yd.		290	290
	Floor Drains	Each	4		4
	Concrete Structures	Cu. Yd.		105.7	105.7
	Concrete Superstructure	Cu. Yd.	478.8		478.8
	Bridge Deck Grooving	Sq. Yd.	1,309		1,309
	Concrete Encasement	Cu. Yd.		0.7	0.7
	Protective Coat	Sq. Yd.	1,499		1,499
*	Furnishing and Erecting Structural Steel	L Sum	0.03		0.03
	Stud Shear Connectors	Each	5,382		5,382
	Reinforcement Bars, Epoxy Coated	Pound	105,650	8,250	113,900
	Slope Wall 4 Inch	Sq. Yd.		606	606
	Furnishing Steel Piles HP12x53	Foot		230	230
	Driving Piles	Foot		230	230
	Test Pile Steel HP12x53	Each		4	4
	Pile Shoes	Each		11	11
	Name Plates	Each	1		1
	Elastomeric Bearing Assembly, Type I	Each	2		2
	Elastomeric Bearing Assembly, Type II	Each	1		1
	Anchor Bolts, 3/4"	Each	6		6
**	Epoxy Crack Injection	Foot		23	23
	Geocomposite Wall Drain	Sq. Yd.		137	137
	Remove Conduit Attached to Structure	Foot	500		500
	Granular Backfill for Structures	Cu. Yd.		315	315
	Adjust Rocker and Sole Plate	Each	8		8
	Structural Steel Repair	Pound	4,890		4,890
	Cleaning Bridge Seats	Sq. Ft.		439	439
**	Structural Repair of Concrete (Depth Equal to or Less Than 5 Inches)	Sq. Ft.		15	15
**	Structural Repair of Concrete (Depth Greater than 5 Inches)	Sq. Ft.		5	5
	Pipe Underdrains for Structures 4"	Foot		114	114
***	Selective Clearing	Unit		2	2
	Temporary Soil Retention System	Sq. Ft.		746	746

* Remainder of this item is installed with other structures in this Contract. See other structures for remaining quantity.

** Quantity includes a contingency (above the amounts shown in the individual bills of material) to account for uncertainties associated with the condition of the existing substructure and the age of the original inspections (2008-09). Actual repair areas will be determined by the Engineer in the field.

*** The quantity for this work is estimated. The intent for this work is to remove accumulations of rubbish, vegetation, etc. on the existing slopewalls and other areas.

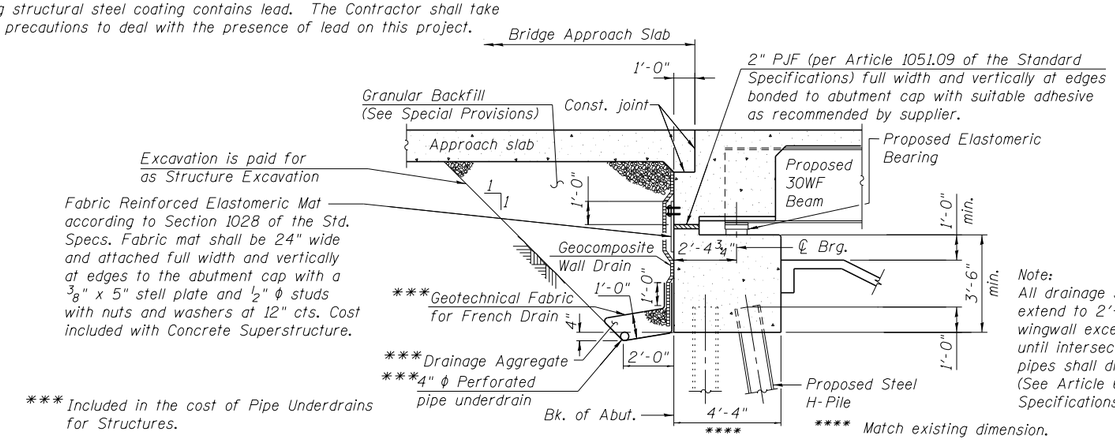

*** Included in the cost of Pipe Underdrains for Structures.

**** Match existing dimension.

Note:
All drainage system components shall extend to 2'-0" from the end of each wingwall except an outlet pipe shall extend until intersecting with the side slopes. The pipes shall drain into concrete headwalls. (See Article 601.05 of the Standard Specifications and highwal Standard 601101).

SECTION THRU PROPOSED SEMI-INTEGRAL ABUTMENTS

(Horiz. dim. @ Rt. L's)

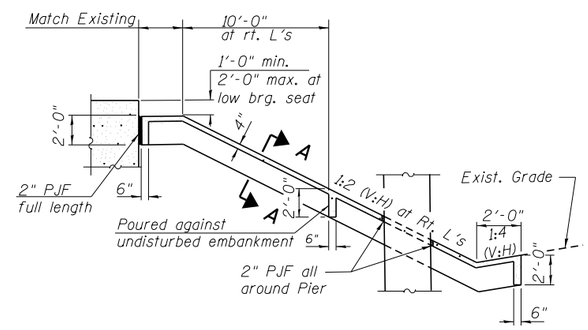

SECTION THRU CONCRETE SLOPEWALL

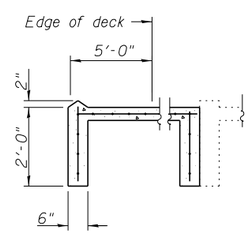

SECTION A-A

NOTE:

Slope wall shall be reinforced with welded wire fabric, 6 in. x 6 in. W4.0 x W4.0, weighing 58 lbs per 100 sq. ft.

benesch engineers · scientists · planners
Alfred Benesch & Company
205 North Michigan Avenue, Suite 2400
Chicago, Illinois 60601
312-565-0450 Job No. 10093

FILE NAME = 016-0488-60J16-002-General Data.dgn	USER NAME = tjanicke	DESIGNED - CMK	REVISED -
		CHECKED - JAW	REVISED -
	PLOT SCALE =	DRAWN - CMK	REVISED -
	PLOT DATE = 12/20/2013	CHECKED - JAW	REVISED -

STATE OF ILLINOIS
DEPARTMENT OF TRANSPORTATION

GENERAL NOTES, BILL OF MATERIAL, AND INDEX OF SHEETS
STRUCTURE NO. 016-0488

SHEET NO. SH2 OF SH36 SHEETS

F.A.P. RTE.	SECTION	COUNTY	TOTAL SHEETS	SHEET NO.
373	2013-038B-R	COOK	821	740
		CONTRACT NO. 60J16		
		ILLINOIS FED. AID PROJECT		

6/23/2014 4:24:42 PM X:\100005\10093\Eng_Docs_Phase_II\SN_016_0488_0489_1st_Ave_over_ICC_RR\Final\Final 0488-60J16-0488-60J16-002-General Data.dgn

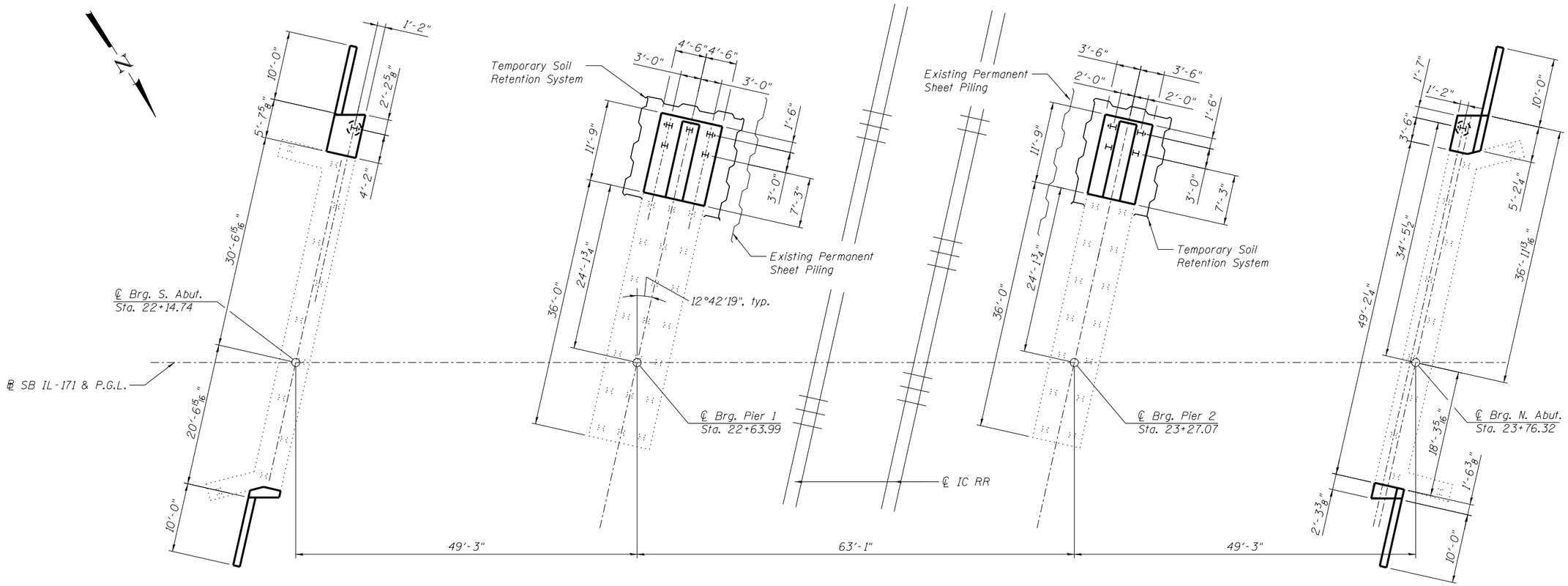

FOOTING LAYOUT

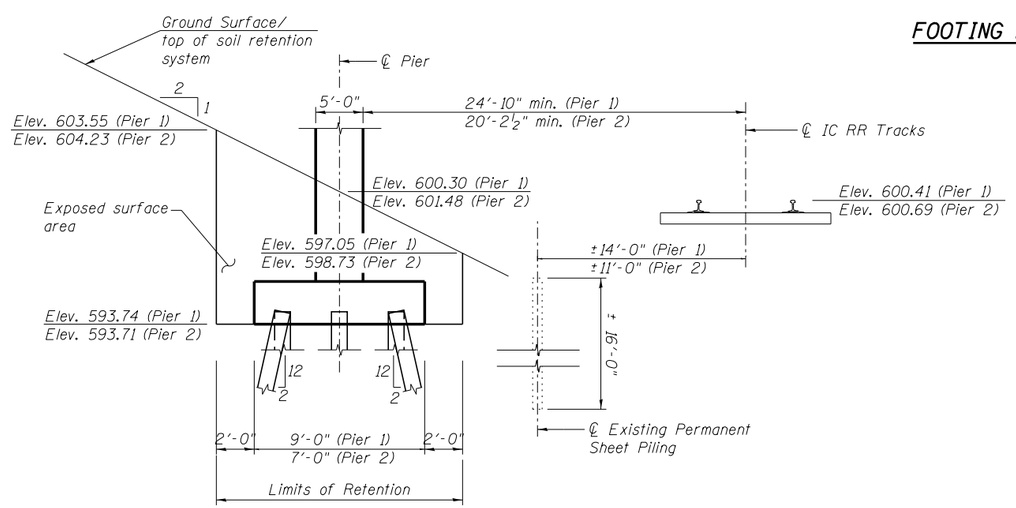

TEMPORARY SOIL RETENTION SYSTEM

Pier 1 shown. Pier 2 similar

All dimensions perpendicular to skew unless otherwise noted.

BILL OF MATERIAL

ITEM	UNIT	TOTAL
Temporary Soil Retention System	Sq. Ft.	746

LEGEND

I Indicates vertical pile

Indicates battered pile 12:2 (V:H)

Indicates Concrete Encasement

NOTES:

1. For abutment details, see sheets SH24 thru SH25.
2. For pier details, see sheets SH28 and SH29.
3. For HP Pile Details, see sheet SH30.
4. A cantilevered sheet piling design does not appear feasible and additional members or other retention systems may be necessary. The Contractor shall submit a temporary soil retention system design including plan details and calculations for review and acceptance by the Engineer.
5. For Concrete Encasement Details, see Sheet SH30.

benesch
engineers · scientists · planners
Alfred Benesch & Company
205 North Michigan Avenue, Suite 2400
Chicago, Illinois 60601
312-565-0450 Job No. 10093

FILE NAME =	USER NAME = jsurber	DESIGNED - CMK	REVISED -	STATE OF ILLINOIS DEPARTMENT OF TRANSPORTATION	FOOTING LAYOUT STRUCTURE NO. 016-0488	F.A.P. RTE.	SECTION	COUNTY	TOTAL SHEETS / SHEET NO.
		CHECKED - JAW	REVISED -			373	2013-038B-R	COOK	821 / 741
016-0488-60J16-003-Footing Layout.dgn	PLOT SCALE =	DRAWN - CMK	REVISED -					CONTRACT NO. 60J16	
	PLOT DATE = 12/20/2013	CHECKED - JAW	REVISED -		SHEET NO. SH3 OF SH36 SHEETS		ILLINOIS FED. AID PROJECT		

Y:\chicago\100000S\10093\Eng_Docs_Phase_II\SN_016_0488_0489_1st_Ave_over_ICC_RR\Final 0488\016-0488-60J16-003-Footing Layout.dgn 8:27:08 AM 7/16/2014

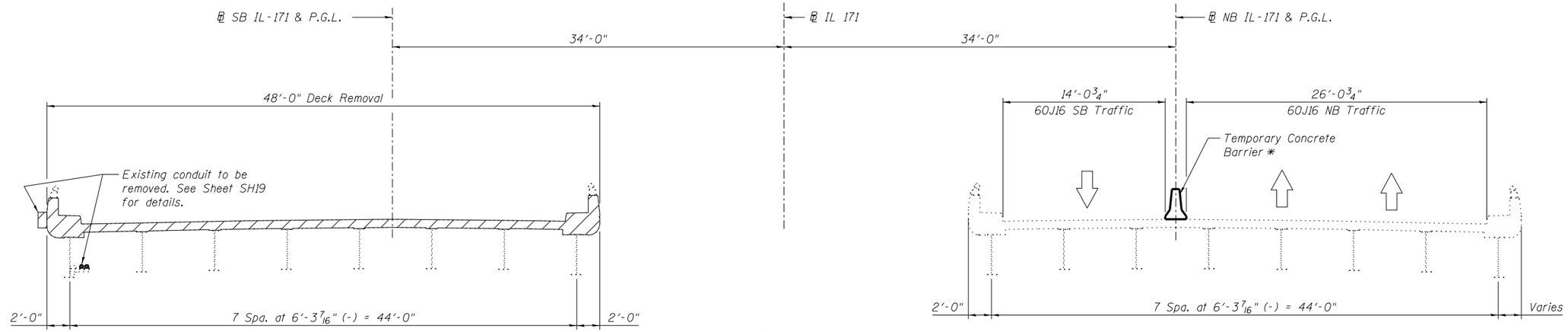

CONTRACT 60J16 REMOVAL

(Looking Upstation, North)

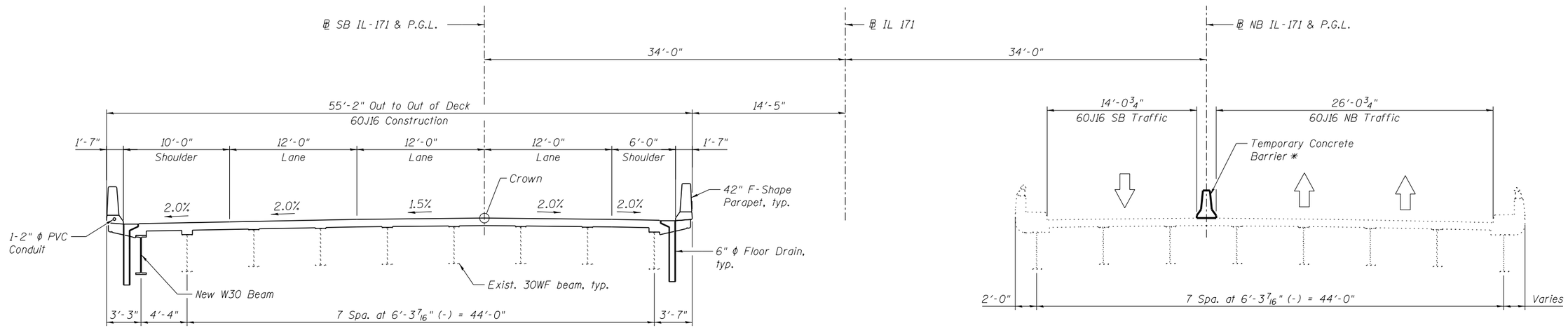

CONTRACT 60J16 CONSTRUCTION

(Looking Upstation, North)

BILL OF MATERIAL

ITEM	UNIT	TOTAL
Removal of Existing Concrete Deck	Each	1

Indicates Removal of Existing Concrete Deck

* See Sheet SH5 and Maintenance of Traffic Sheets for more information.

NOTES:

1. All staging deck cross sections are shown looking upstation, North.
2. The Contractor shall use extreme caution during concrete deck removal so as not to damage the existing Steel Beams. Contractor shall repair any damage to Steel Beams at no additional cost. See Special Provision for "Removal of Existing Concrete Deck".
3. Temporary Concrete Barrier shall not be anchored to the deck.

benesch
engineers · scientists · planners
Alfred Benesch & Company
205 North Michigan Avenue, Suite 2400
Chicago, Illinois 60601
312-565-0450 Job No. 10093

FILE NAME = 016-0488-60J16-004-Stage Construction Details.dgn	USER NAME = tjanicke	DESIGNED - CMK	REVISED -
		CHECKED - JAW	REVISED -
	PLOT SCALE = 1.0000 ' / in.	DRAWN - CMK	REVISED -
	PLOT DATE = 12/20/2013	CHECKED - JAW	REVISED -

STATE OF ILLINOIS
DEPARTMENT OF TRANSPORTATION

STAGE CONSTRUCTION DETAILS
STRUCTURE NO. 016-0488

SHEET NO. SH4 OF SH36 SHEETS

F.A.P. RTE.	SECTION	COUNTY	TOTAL SHEETS	SHEET NO.
373	2013-038B-R	COOK	821	742

CONTRACT NO. 60J16

ILLINOIS FED. AID PROJECT

X:\10000S\10093\Eng_Docs_Phase_II\SN_016_0488_0489_1st_Ave_over_ICC_RR\Final\Final 0488\016-0488-60J16-004-Stage Construction Details.dgn
6/23/2014 3:01:55 PM

When "A" is 3'-6" or less, the temporary concrete barrier shall be anchored to the new slab according to Detail I or Detail II. No anchorage is required when "A" is greater than 3'-6".

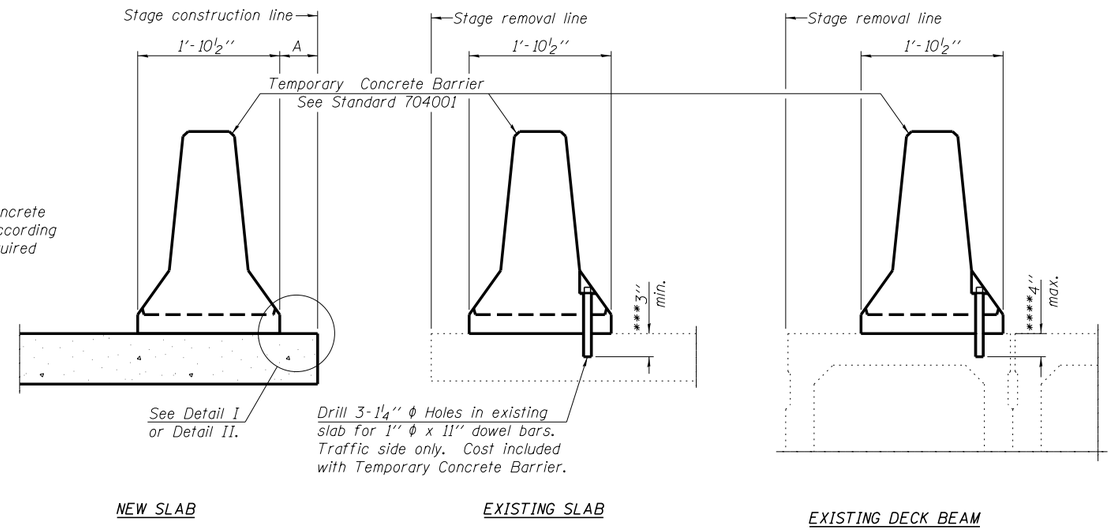

SECTIONS THRU SLAB OR DECK BEAM

NOTES

Detail I - With Bar Splicer or Couplers:
Connect one (1) 1'' x 7' 'x ''W'' steel ℙ to the top layer of couplers with 2-⅝'' ϕ bolts screwed to coupler at approximate ℄ of each barrier panel.

Detail II - With Extended Reinforcement Bars:
Connect one (1) 1'' x 7'' x ''W'' steel ℙ to the concrete slab or concrete wearing surface with 2-⅝'' ϕ Expansion Anchors or cast in place inserts spaced between the top layer of reinforcement at approximate ℄ of each barrier panel.

Cost of anchorage is included with Temporary Concrete Barrier.

The 1'' x 7'' x ''W'' plate shall not be removed until stage II construction forms and all reinforcement bars are in place and the concrete is ready to be placed.

*** Dimension shown is minimum required embedment into concrete. If hot-mix asphalt wearing surface is present, minimum embedment shall be in addition to wearing surface depth.

**** If existing deck beam is to remain in place after stage construction, embedment shall only be into wearing surface and not into existing deck beam concrete.

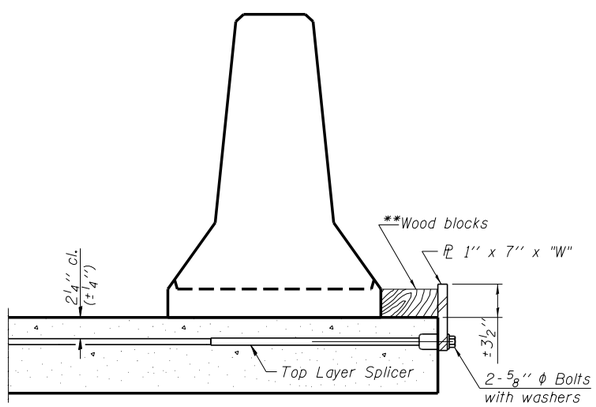

DETAIL I

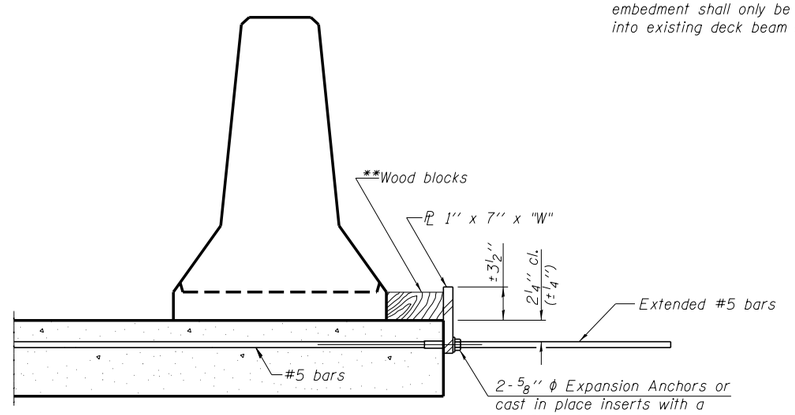

DETAIL II

** Wood blocks may be omitted when required to provide minimum stage traffic lane width. When the wood blocks are omitted, the concrete barrier shall be in direct contact with the steel retainer plate.

"W" = Top bars spacing + 4''

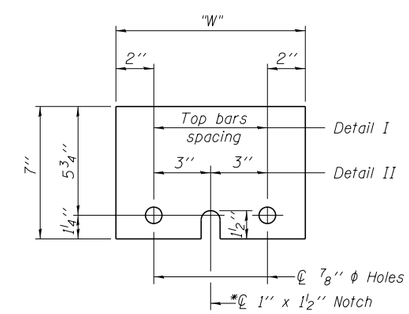

STEEL RETAINER ℙ 1'' x 7'' x ''W''

* Required only with Detail II

benesch engineers · scientists · planners
Alfred Benesch & Company
205 North Michigan Avenue, Suite 2400
Chicago, Illinois 60601
312-565-0450 Job No. 10093

R-27 7-1-10

FILE NAME = 016-0488-60J16-005-Temporary Concrete Barrier.dgn	USER NAME = tjanicke	DESIGNED - CMK	REVISED -	STATE OF ILLINOIS DEPARTMENT OF TRANSPORTATION	TEMPORARY CONCRETE BARRIER FOR STAGE CONSTRUCTION STRUCTURE NO. 016-0488	F.A.P. RTE. 373	SECTION 2013-038B-R	COUNTY COOK
		CHECKED - JAW	REVISED -					TOTAL SHEETS 821 / SHEET NO. 743
	PLOT SCALE =	DRAWN - CMK	REVISED -					CONTRACT NO. 60J16
	PLOT DATE = 12/20/2013	CHECKED - JAW	REVISED -		SHEET NO. 5H5 OF 5H36 SHEETS			ILLINOIS FED. AID PROJECT

X:\10000S\10093\Eng_Docs_Phase_II\SN_016_0488_0489_1st_Ave_over_ICC_RR\Final 0488\016-0488-60J16-005-Temporary Concrete Barrier.dgn 3:01:56 PM 6/23/2014

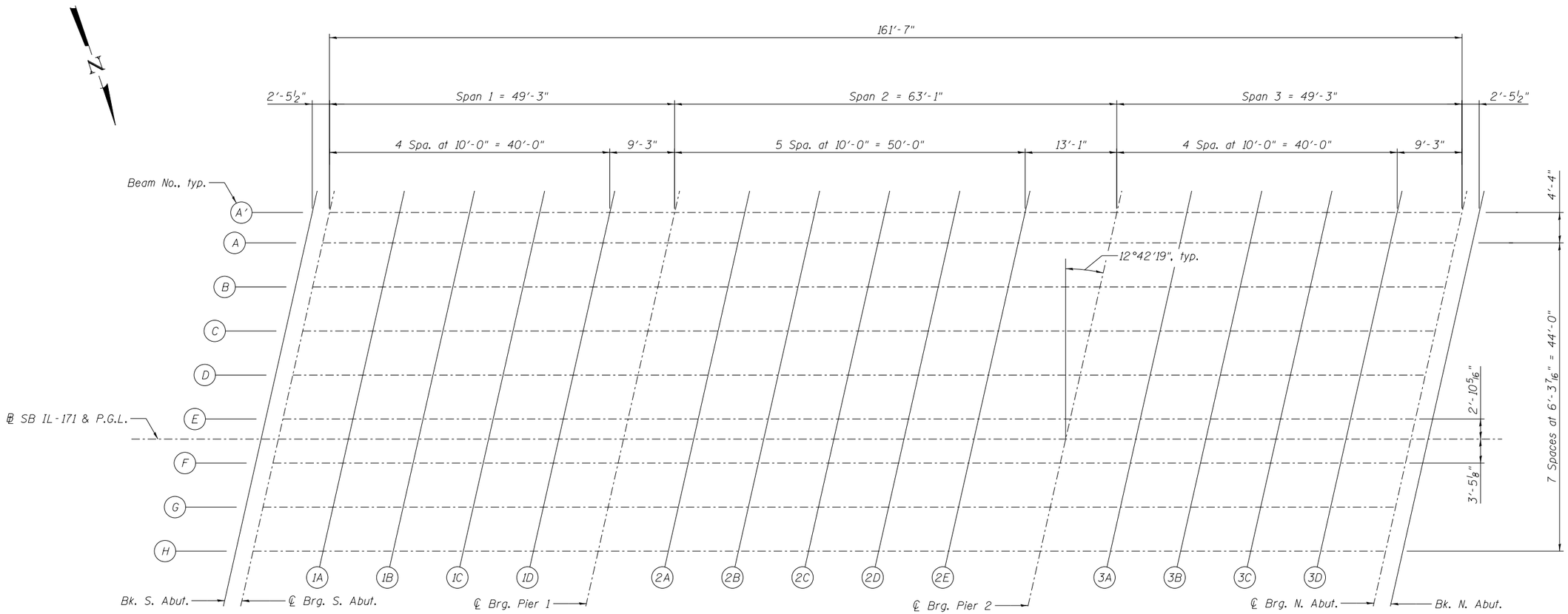

PLAN

benesch
engineers · scientists · planners

Alfred Benesch & Company
205 North Michigan Avenue, Suite 2400
Chicago, Illinois 60601
312-565-0450 Job No. 10093

FILE NAME = 016-0488-60J16-006-Top of Slab Elevations Plan.dgn	USER NAME = tjanicke	DESIGNED - CMK	REVISED -	STATE OF ILLINOIS DEPARTMENT OF TRANSPORTATION	TOP OF SLAB ELEVATIONS PLAN STRUCTURE NO. 016–0488	F.A.P. RTE.	SECTION	COUNTY	TOTAL SHEETS / SHEET NO.
		CHECKED - JAW	REVISED -			373	2013-038B-R	COOK	821 / 744
	PLOT SCALE =	DRAWN - CMK	REVISED -					CONTRACT NO. 60J16	
	PLOT DATE = 12/20/2013	CHECKED - JAW	REVISED -		SHEET NO. SH6 OF SH36 SHEETS			ILLINOIS FED. AID PROJECT	

X:\10000S\10093\Eng_Docs_Phase_II\SN_016_0488_0489_1st_Ave_over_ICC_RR\Final 0488\016-0488-60J16-006-Top of Slab Elevations Plan.dgn 6/23/2014 3:01:56 PM

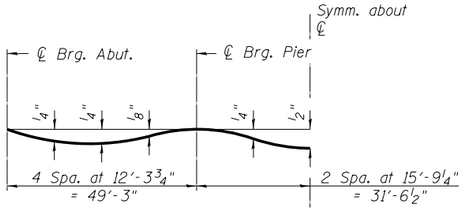

DEAD LOAD DEFLECTION DIAGRAM

(Includes weight of concrete only.)

Note:
The above deflections are not to be used in the field if the engineer is working from the "Theoretical Grade Elevations Adjusted for Dead Load Deflection" as shown on this sheet and Sheets SH8 and SH9.

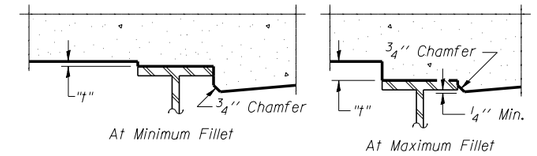

To determine "t": After all structural steel has been erected, elevations of the top flanges of the beams shall be taken at intervals shown on Sheet SH6. These elevations subtracted from the "Theoretical Grade Elevations Adjusted for Dead Load Deflection" shown below and on Sheets SH8 and SH9, minus slab thickness, equals the fillet heights "t" above top flange of beams.

FILLET HEIGHTS

BEAM A'

Location	Station	Offset	Theoretical Grade Elevations	Theoretical Grade Elevations Adjusted For Dead Load Deflection
BK. S. ABUT.	22+19.57	32.33	626.63	626.63
CL. BRG. S. ABUT.	22+22.03	32.33	626.65	626.65
1A	22+32.03	32.33	626.74	626.76
1B	22+42.03	32.33	626.83	626.85
1C	22+52.03	32.33	626.91	626.93
1D	22+62.03	32.33	626.98	626.99
CL. BRG. PIER 1	22+71.28	32.33	627.05	627.05
2A	22+81.28	32.33	627.11	627.12
2B	22+91.28	32.33	627.18	627.20
2C	23+01.28	32.33	627.23	627.27
2D	23+11.28	32.33	627.29	627.32
2E	23+21.28	32.33	627.34	627.36
CL. BRG. PIER 2	23+34.36	32.33	627.39	627.40
3A	23+44.36	32.33	627.43	627.43
3B	23+54.36	32.33	627.47	627.48
3C	23+64.36	32.33	627.50	627.52
3D	23+74.36	32.33	627.52	627.55
CL. BRG. N. ABUT.	23+83.61	32.33	627.54	627.55
BK. N. ABUT.	23+86.07	32.33	627.55	627.55

BEAM A

Location	Station	Offset	Theoretical Grade Elevations	Theoretical Grade Elevations Adjusted For Dead Load Deflection
BK. S. ABUT.	22+18.59	28.00	626.71	626.71
CL. BRG. S. ABUT.	22+21.05	28.00	626.73	626.73
1A	22+31.05	28.00	626.82	626.84
1B	22+41.05	28.00	626.90	626.93
1C	22+51.05	28.00	626.98	627.01
1D	22+61.05	28.00	627.06	627.07
CL. BRG. PIER 1	22+70.30	28.00	627.13	627.13
2A	22+80.30	28.00	627.19	627.20
2B	22+90.30	28.00	627.26	627.27
2C	23+00.30	28.00	627.31	627.35
2D	23+10.30	28.00	627.37	627.40
2E	23+20.30	28.00	627.42	627.44
CL. BRG. PIER 2	23+33.38	28.00	627.48	627.48
3A	23+43.38	28.00	627.52	627.52
3B	23+53.38	28.00	627.55	627.57
3C	23+63.38	28.00	627.58	627.61
3D	23+73.38	28.00	627.61	627.63
CL. BRG. N. ABUT.	23+82.63	28.00	627.63	627.64
BK. N. ABUT.	23+85.09	28.00	627.63	627.63

BEAM B

Location	Station	Offset	Theoretical Grade Elevations	Theoretical Grade Elevations Adjusted For Dead Load Deflection
BK. S. ABUT.	22+17.17	21.71	626.82	626.82
CL. BRG. S. ABUT.	22+19.63	21.71	626.84	626.84
1A	22+29.63	21.71	626.93	626.95
1B	22+39.63	21.71	627.02	627.04
1C	22+49.63	21.71	627.10	627.12
1D	22+59.63	21.71	627.18	627.19
CL. BRG. PIER 1	22+68.88	21.71	627.24	627.24
2A	22+78.88	21.71	627.31	627.31
2B	22+88.88	21.71	627.37	627.39
2C	22+98.88	21.71	627.43	627.47
2D	23+08.88	21.71	627.49	627.52
2E	23+18.88	21.71	627.54	627.56
CL. BRG. PIER 2	23+31.96	21.71	627.60	627.60
3A	23+41.96	21.71	627.64	627.64
3B	23+51.96	21.71	627.67	627.69
3C	23+61.96	21.71	627.70	627.73
3D	23+71.96	21.71	627.73	627.75
CL. BRG. N. ABUT.	23+81.21	21.71	627.75	627.76
BK. N. ABUT.	23+83.67	21.71	627.76	627.76

benesch
engineers · scientists · planners
Alfred Benesch & Company
205 North Michigan Avenue, Suite 2400
Chicago, Illinois 60601
312-565-0450 Job No. 10093

BEAM C

Location	Station	Offset	Theoretical Grade Elevations	Theoretical Grade Elevations Adjusted For Dead Load Deflection
BK. S. ABUT.	22+15.76	15.43	626.93	626.93
CL. BRG. S. ABUT.	22+18.22	15.43	626.96	626.96
1A	22+28.22	15.43	627.05	627.07
1B	22+38.22	15.43	627.13	627.16
1C	22+48.22	15.43	627.21	627.24
1D	22+58.22	15.43	627.29	627.30
CL. BRG. PIER 1	22+67.47	15.43	627.36	627.36
2A	22+77.47	15.43	627.43	627.43
2B	22+87.47	15.43	627.49	627.51
2C	22+97.47	15.43	627.55	627.58
2D	23+07.47	15.43	627.60	627.64
2E	23+17.47	15.43	627.66	627.68
CL. BRG. PIER 2	23+30.55	15.43	627.72	627.72
3A	23+40.55	15.43	627.76	627.76
3B	23+50.55	15.43	627.79	627.81
3C	23+60.55	15.43	627.82	627.85
3D	23+70.55	15.43	627.85	627.87
CL. BRG. N. ABUT.	23+79.80	15.43	627.87	627.88
BK. N. ABUT.	23+82.26	15.43	627.88	627.88

BEAM D

Location	Station	Offset	Theoretical Grade Elevations	Theoretical Grade Elevations Adjusted For Dead Load Deflection
BK. S. ABUT.	22+14.34	9.14	627.03	627.03
CL. BRG. S. ABUT.	22+16.80	9.14	627.06	627.06
1A	22+26.80	9.14	627.15	627.16
1B	22+36.80	9.14	627.23	627.26
1C	22+46.80	9.14	627.31	627.34
1D	22+56.80	9.14	627.39	627.40
CL. BRG. PIER 1	22+66.05	9.14	627.46	627.46
2A	22+76.05	9.14	627.53	627.53
2B	22+86.05	9.14	627.59	627.61
2C	22+96.05	9.14	627.65	627.69
2D	23+06.05	9.14	627.71	627.74
2E	23+16.05	9.14	627.76	627.79
CL. BRG. PIER 2	23+29.13	9.14	627.82	627.83
3A	23+39.13	9.14	627.86	627.86
3B	23+49.13	9.14	627.90	627.91
3C	23+59.13	9.14	627.93	627.96
3D	23+69.13	9.14	627.96	627.98
CL. BRG. N. ABUT.	23+78.38	9.14	627.98	627.99
BK. N. ABUT.	23+80.84	9.14	627.99	627.99

BEAM E

Location	Station	Offset	Theoretical Grade Elevations	Theoretical Grade Elevations Adjusted For Dead Load Deflection
BK. S. ABUT.	22+12.92	2.85	627.11	627.11
CL. BRG. S. ABUT.	22+15.38	2.85	627.14	627.14
1A	22+25.38	2.85	627.23	627.25
1B	22+35.38	2.85	627.31	627.34
1C	22+45.38	2.85	627.40	627.42
1D	22+55.38	2.85	627.48	627.49
CL. BRG. PIER 1	22+64.63	2.85	627.54	627.55
2A	22+74.63	2.85	627.61	627.62
2B	22+84.63	2.85	627.68	627.70
2C	22+94.63	2.85	627.74	627.77
2D	23+04.63	2.85	627.80	627.83
2E	23+14.63	2.85	627.85	627.87
CL. BRG. PIER 2	23+27.71	2.85	627.91	627.91
3A	23+37.71	2.85	627.95	627.95
3B	23+47.71	2.85	627.99	628.00
3C	23+57.71	2.85	628.02	628.05
3D	23+67.71	2.85	628.05	628.07
CL. BRG. N. ABUT.	23+76.96	2.85	628.07	628.08
BK. N. ABUT.	23+79.42	2.85	628.08	628.08

benesch
engineers · scientists · planners
Alfred Benesch & Company
205 North Michigan Avenue, Suite 2400
Chicago, Illinois 60601
312-565-0450 Job No. 10093

SB IL-171 P.G.L. & CROWN

Location	Station	Offset	Theoretical Grade Elevations	Theoretical Grade Elevations Adjusted For Dead Load Deflection
BK. S. ABUT.	22+12.28	0.00	627.15	627.15
CL. BRG. S. ABUT.	22+14.74	0.00	627.17	627.17
1A	22+24.74	0.00	627.26	627.28
1B	22+34.74	0.00	627.35	627.38
1C	22+44.74	0.00	627.43	627.46
1D	22+54.74	0.00	627.51	627.53
CL. BRG. PIER 1	22+63.99	0.00	627.58	627.58
2A	22+73.99	0.00	627.65	627.66
2B	22+83.99	0.00	627.72	627.74
2C	22+93.99	0.00	627.78	627.81
2D	23+03.99	0.00	627.83	627.87
2E	23+13.99	0.00	627.89	627.91
CL. BRG. PIER 2	23+27.07	0.00	627.95	627.95
3A	23+37.07	0.00	627.99	627.99
3B	23+47.07	0.00	628.03	628.03
3C	23+57.07	0.00	628.06	628.06
3D	23+67.07	0.00	628.09	628.09
CL. BRG. N. ABUT.	23+76.32	0.00	628.11	628.11
BK. N. ABUT.	23+78.78	0.00	628.12	628.12

BEAM F

Location	Station	Offset	Theoretical Grade Elevations	Theoretical Grade Elevations Adjusted For Dead Load Deflection
BK. S. ABUT.	22+11.51	-3.43	627.09	627.09
CL. BRG. S. ABUT.	22+13.97	-3.43	627.11	627.11
1A	22+23.97	-3.43	627.21	627.23
1B	22+33.97	-3.43	627.29	627.32
1C	22+43.97	-3.43	627.38	627.40
1D	22+53.97	-3.43	627.46	627.47
CL. BRG. PIER 1	22+63.22	-3.43	627.52	627.53
2A	22+73.22	-3.43	627.59	627.60
2B	22+83.22	-3.43	627.66	627.68
2C	22+93.22	-3.43	627.72	627.76
2D	23+03.22	-3.43	627.78	627.81
2E	23+13.22	-3.43	627.83	627.86
CL. BRG. PIER 2	23+26.30	-3.43	627.89	627.90
3A	23+36.30	-3.43	627.94	627.94
3B	23+46.30	-3.43	627.97	627.99
3C	23+56.30	-3.43	628.01	628.03
3D	23+66.30	-3.43	628.04	628.06
CL. BRG. N. ABUT.	23+75.55	-3.43	628.06	628.07
BK. N. ABUT.	23+78.01	-3.43	628.07	628.07

BEAM G

Location	Station	Offset	Theoretical Grade Elevations	Theoretical Grade Elevations Adjusted For Dead Load Deflection
BK. S. ABUT.	22+10.09	-9.72	626.98	626.98
CL. BRG. S. ABUT.	22+12.55	-9.72	627.01	627.01
1A	22+22.55	-9.72	627.10	627.12
1B	22+32.55	-9.72	627.19	627.21
1C	22+42.55	-9.72	627.27	627.30
1D	22+52.55	-9.72	627.35	627.36
CL. BRG. PIER 1	22+61.80	-9.72	627.42	627.42
2A	22+71.80	-9.72	627.49	627.50
2B	22+81.80	-9.72	627.56	627.58
2C	22+91.80	-9.72	627.62	627.65
2D	23+01.80	-9.72	627.68	627.71
2E	23+11.80	-9.72	627.73	627.76
CL. BRG. PIER 2	23+24.88	-9.72	627.79	627.80
3A	23+34.88	-9.72	627.84	627.84
3B	23+44.88	-9.72	627.88	627.89
3C	23+54.88	-9.72	627.91	627.93
3D	23+64.88	-9.72	627.94	627.96
CL. BRG. N. ABUT.	23+74.13	-9.72	627.96	627.97
BK. N. ABUT.	23+76.59	-9.72	627.97	627.97

BEAM H

Location	Station	Offset	Theoretical Grade Elevations	Theoretical Grade Elevations Adjusted For Dead Load Deflection
BK. S. ABUT.	22+08.67	-16.00	626.86	626.86
CL. BRG. S. ABUT.	22+11.13	-16.00	626.88	626.88
1A	22+21.13	-16.00	626.97	626.99
1B	22+31.13	-16.00	627.06	627.09
1C	22+41.13	-16.00	627.15	627.17
1D	22+51.13	-16.00	627.23	627.24
CL. BRG. PIER 1	22+60.38	-16.00	627.30	627.30
2A	22+70.38	-16.00	627.37	627.37
2B	22+80.38	-16.00	627.43	627.45
2C	22+90.38	-16.00	627.50	627.53
2D	23+00.38	-16.00	627.55	627.59
2E	23+10.38	-16.00	627.61	627.64
CL. BRG. PIER 2	23+23.46	-16.00	627.67	627.68
3A	23+33.46	-16.00	627.72	627.72
3B	23+43.46	-16.00	627.76	627.77
3C	23+53.46	-16.00	627.79	627.82
3D	23+63.46	-16.00	627.82	627.84
CL. BRG. N. ABUT.	23+72.71	-16.00	627.85	627.86
BK. N. ABUT.	23+75.17	-16.00	627.85	627.85

benesch
engineers · scientists · planners
Alfred Benesch & Company
205 North Michigan Avenue, Suite 2400
Chicago, Illinois 60601
312-565-0450 Job No. 10093

FILE NAME = 016-0488-60J16-009-Top of Slab Elevations	USER NAME = tjanicke	DESIGNED - CMK	REVISED -
	PLOT SCALE =	CHECKED - JAW	REVISED -
	PLOT DATE = 12/20/2013	DRAWN - CMK	REVISED -
		CHECKED - JAW	REVISED -

STATE OF ILLINOIS
DEPARTMENT OF TRANSPORTATION

TOP OF SLAB ELEVATIONS (3 OF 3)
STRUCTURE NO. 016-0488

SHEET NO. SH9 OF SH36 SHEETS

F.A.P. RTE.	SECTION	COUNTY	TOTAL SHEETS	SHEET NO.
373	2013-038B-R	COOK	821	747

CONTRACT NO. 60J16

ILLINOIS FED. AID PROJECT

X:\10000S\10093\Eng_Docs_Phase_II\SN_016_0488_0489_1st_Ave_over_ICC_RR\Final\Final 0488-60J16-009-Top of Slab Elevations 3 of 3.dgn
3:01:59 PM
6/23/2014

EDGE OF OUTSIDE SHOULDER

Location	Station	Offset	Theoretical Grade Elevations
South End of Approach Slab	21+90.98	-34.00	626.32
A1	22+00.98	-34.00	626.42
A2	22+10.98	-34.00	626.52
North End of Approach Slab	22+20.98	-34.00	626.61

OUTSIDE EDGE OF MIDDLE LANE

Location	Station	Offset	Theoretical Grade Elevations
South End of Approach Slab	21+86.02	-12.00	626.71
A1	21+96.02	-12.00	626.81
A2	22+06.02	-12.00	626.91
North End of Approach Slab	22+16.02	-12.00	627.01

SB IL-171 P.G.L. & CROWN

Location	Station	Offset	Theoretical Grade Elevations
South End of Approach Slab	21+83.31	0.00	626.86
A1	21+93.31	0.00	626.96
A2	22+03.31	0.00	627.06
North End of Approach Slab	22+13.31	0.00	627.16

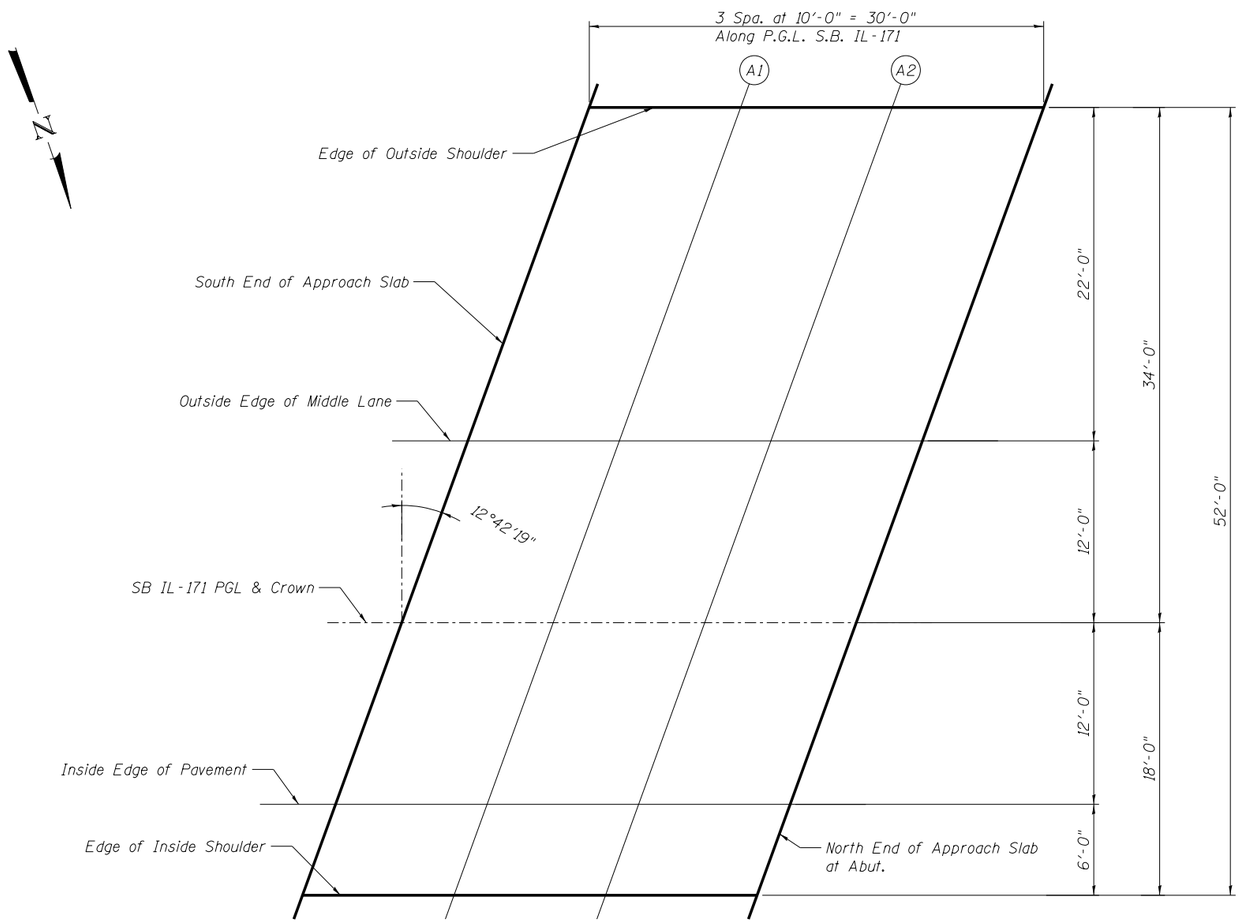

PLAN
(South Approach)

INSIDE EDGE OF PAVEMENT

Location	Station	Offset	Theoretical Grade Elevations
South End of Approach Slab	21+80.60	12.00	626.65
A1	21+90.60	12.00	626.75
A2	22+00.60	12.00	626.86
North End of Approach Slab	22+10.60	12.00	626.95

EDGE OF INSIDE SHOULDER

Location	Station	Offset	Theoretical Grade Elevations
South End of Approach Slab	21+79.25	18.00	626.51
A1	21+89.25	18.00	626.62
A2	21+99.25	18.00	626.72
North End of Approach Slab	22+09.25	18.00	626.82

benesch engineers · scientists · planners
Alfred Benesch & Company
205 North Michigan Avenue, Suite 2400
Chicago, Illinois 60601
312-565-0450 Job No. 10093

FILE NAME = 016-0488-60J16-010-Top of Approach Slab Elevations 1 of 2.dgn	USER NAME = jsurber	DESIGNED - CMK	REVISED -
		CHECKED - JAW	REVISED -
	PLOT SCALE = 1	DRAWN - CMK	REVISED -
	PLOT DATE = 12/20/2013	CHECKED - JAW	REVISED -

STATE OF ILLINOIS
DEPARTMENT OF TRANSPORTATION

TOP OF APPROACH SLAB ELEVATIONS (1 OF 2)
STRUCTURE NO. 016-0488

SHEET NO. SH10 OF SH36 SHEETS

F.A.P. RTE.	SECTION	COUNTY	TOTAL SHEETS	SHEET NO.
373	2013-038B-R	COOK	821	748
		CONTRACT NO. 60J16		
		ILLINOIS FED. AID PROJECT		

Y:\chicago\10000S\10093\Eng_Docs_Phase_II\SN_016_0488_0489_1st_Ave_over_ICC_RR\Final 0488\016-0488-60J16-010-Top of Approach Slab Elevations 1 of 2.dgn 12:09:58 PM 7/16/2014

EDGE OF OUTSIDE SHOULDER

Location	Station	Offset	Theoretical Grade Elevations
South End of Approach Slab	23+85.42	-34.00	627.51
A1	23+95.42	-34.00	627.53
A2	24+05.42	-34.00	627.54
North End of Approach Slab	24+15.42	-34.00	627.55

OUTSIDE EDGE OF MIDDLE LANE

Location	Station	Offset	Theoretical Grade Elevations
South End of Approach Slab	23+80.46	-12.00	627.94
A1	23+90.46	-12.00	627.96
A2	24+00.46	-12.00	627.98
North End of Approach Slab	24+10.46	-12.00	627.99

SB IL-171 P.G.L. & CROWN

Location	Station	Offset	Theoretical Grade Elevations
South End of Approach Slab	23+77.75	0.00	628.12
A1	23+87.75	0.00	628.14
A2	23+97.75	0.00	628.15
North End of Approach Slab	24+07.75	0.00	628.16

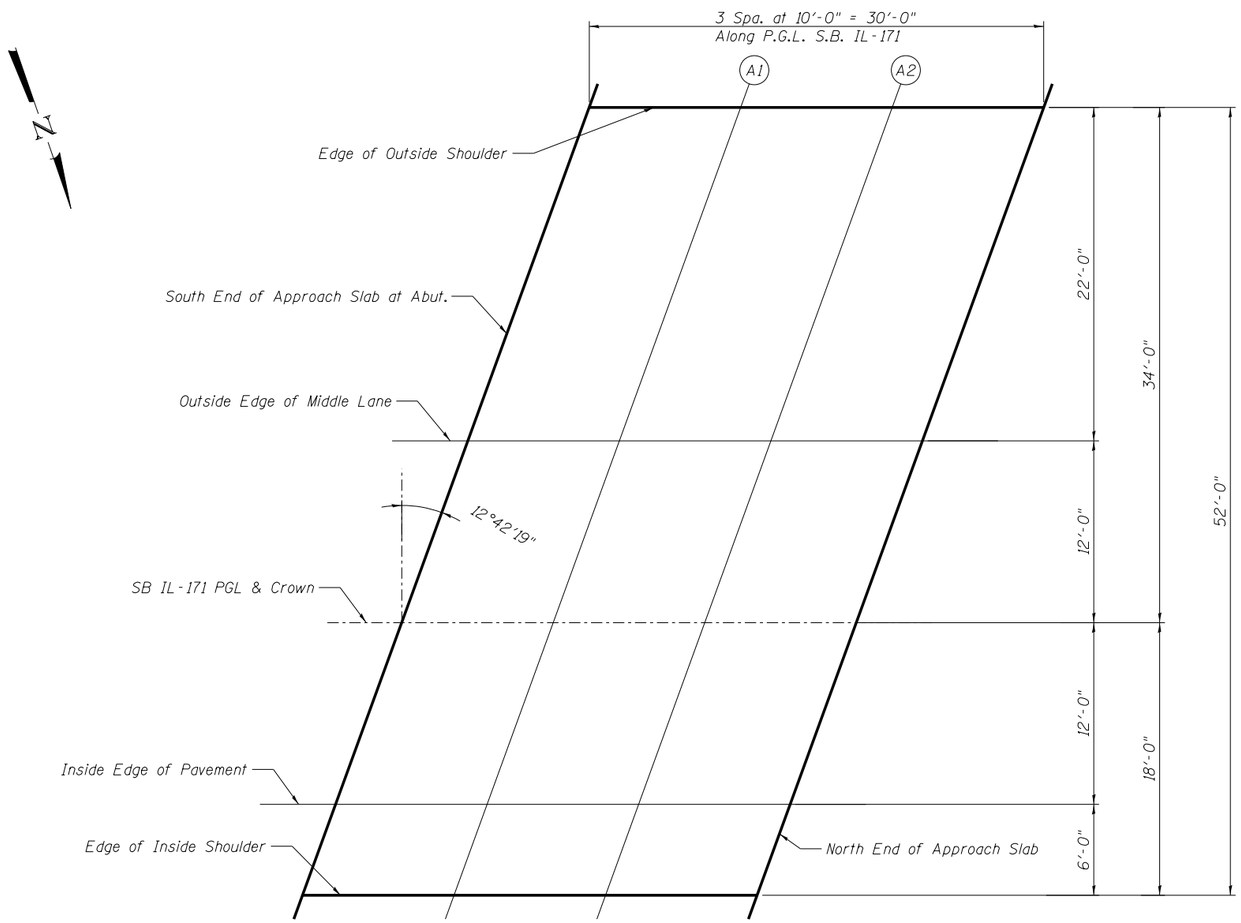

PLAN
(North Approach)

INSIDE EDGE OF PAVEMENT

Location	Station	Offset	Theoretical Grade Elevations
South End of Approach Slab	23+75.04	12.00	627.93
A1	23+85.04	12.00	627.95
A2	23+95.04	12.00	627.97
North End of Approach Slab	24+05.04	12.00	627.98

EDGE OF INSIDE SHOULDER

Location	Station	Offset	Theoretical Grade Elevations
South End of Approach Slab	23+73.69	18.00	627.81
A1	23+83.69	18.00	627.83
A2	23+93.69	18.00	627.85
North End of Approach Slab	24+03.69	18.00	627.86

benesch
engineers · scientists · planners
Alfred Benesch & Company
205 North Michigan Avenue, Suite 2400
Chicago, Illinois 60601
312-565-0450 Job No. 10093

FILE NAME = 016-0488-60J16-011-Top of Approach Slab Elevations 2 of 2.dgn	USER NAME = jsurber	DESIGNED - CMK	REVISED -
		CHECKED - JAW	REVISED -
	PLOT SCALE = 1	DRAWN - CMK	REVISED -
	PLOT DATE = 12/20/2013	CHECKED - JAW	REVISED -

STATE OF ILLINOIS
DEPARTMENT OF TRANSPORTATION

TOP OF APPROACH SLAB ELEVATIONS (2 OF 2)
STRUCTURE NO. 016-0488
SHEET NO. SH11 OF SH36 SHEETS

F.A.P. RTE.	SECTION	COUNTY	TOTAL SHEETS	SHEET NO.
373	2013-038B-R	COOK	821	749

CONTRACT NO. 60J16
ILLINOIS FED. AID PROJECT

Y:\chicago\10000S\10093\Eng_Docs_Phase_II\SN_016_0488_0489_1st_Ave_over_ICC_RR\Final\Final 0488\016-0488-60J16-011-Top of Approach Slab Elevations 2 of 2.dgn
12:09:59 PM
7/16/2014

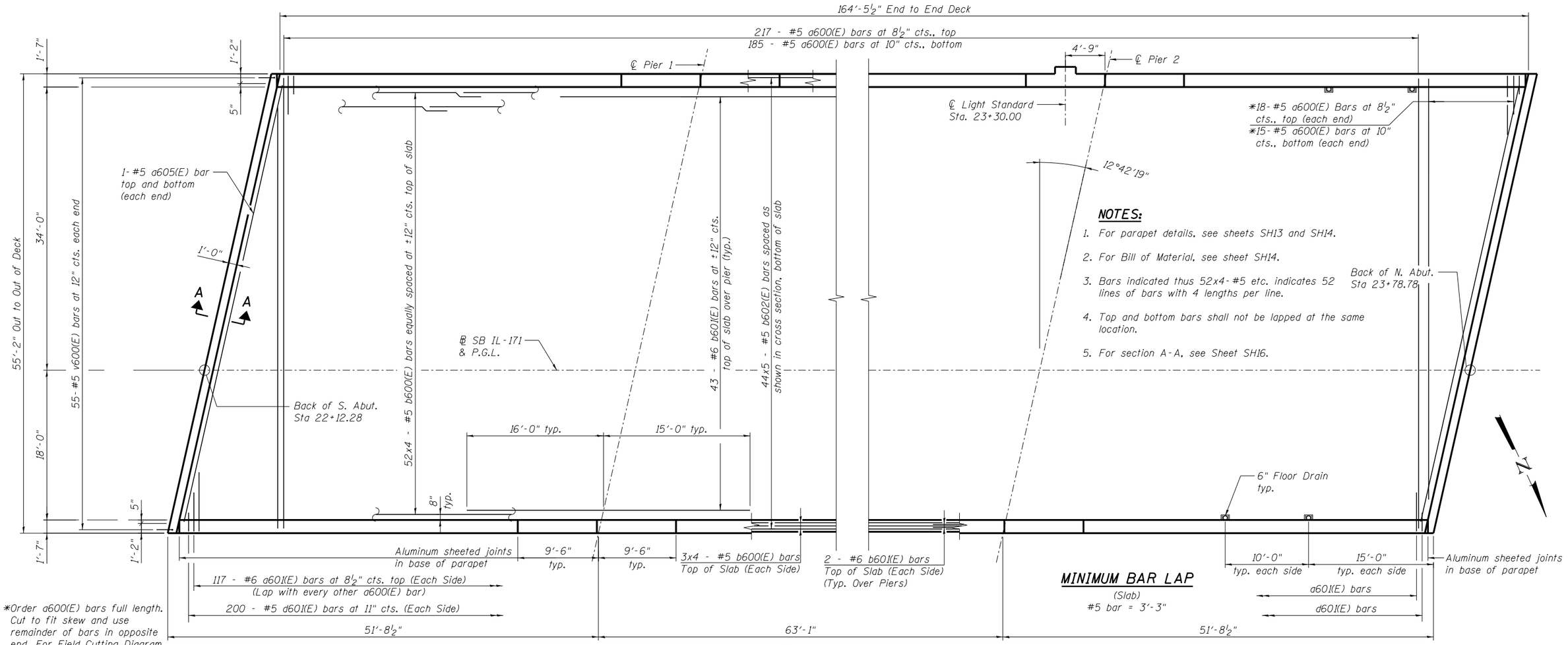

NOTES:

1. For parapet details, see sheets SH13 and SH14.
2. For Bill of Material, see sheet SH14.
3. Bars indicated thus 52x4-#5 etc. indicates 52 lines of bars with 4 lengths per line.
4. Top and bottom bars shall not be lapped at the same location.
5. For section A-A, see Sheet SH16.

MINIMUM BAR LAP
(Slab)
#5 bar = 3'-3"

PLAN

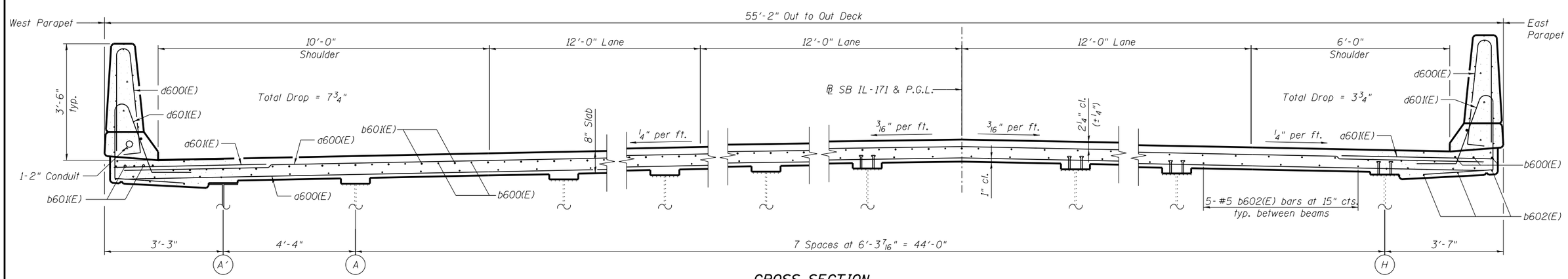

CROSS SECTION
Looking North

NEAR PIERS

NEAR MIDSPAN

benesch
engineers · scientists · planners

Alfred Benesch & Company
205 North Michigan Avenue, Suite 2400
Chicago, Illinois 60601
312-565-0450 Job No. 10093

FILE NAME = 016-0488-60J16-012-Deck Reinforcement Plan.dgn	USER NAME = jsurber	DESIGNED - CMK	REVISED -
		CHECKED - JAW	REVISED -
	PLOT SCALE =	DRAWN - CMK	REVISED -
	PLOT DATE = 12/20/2013	CHECKED - JAW	REVISED -

STATE OF ILLINOIS
DEPARTMENT OF TRANSPORTATION

DECK REINFORCEMENT PLAN
STRUCTURE NO. 016-0488

SHEET NO. SH12 OF SH36 SHEETS

F.A.P. RTE.	SECTION	COUNTY	TOTAL SHEETS	SHEET NO.
373	2013-038B-R	COOK	821	750
		CONTRACT NO. 60J16		
		ILLINOIS FED. AID PROJECT		

Y:\chicago\10000S\10093\Eng_Docs_Phase_II\SN_016_0488_0489_1st_Ave_over_ICC_RR\Final\Final 0488\016-0488-60J16-012-Deck Reinforcement Plan.dgn
9:07:29 AM 7/9/2014

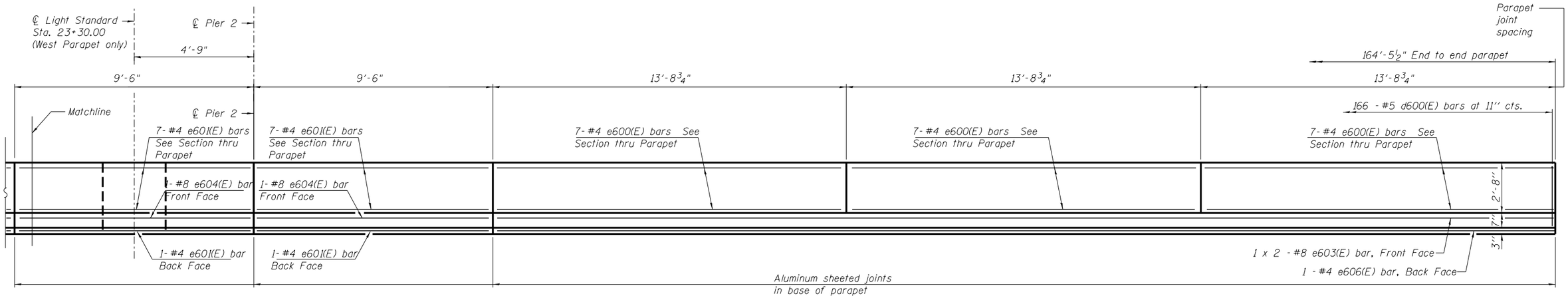

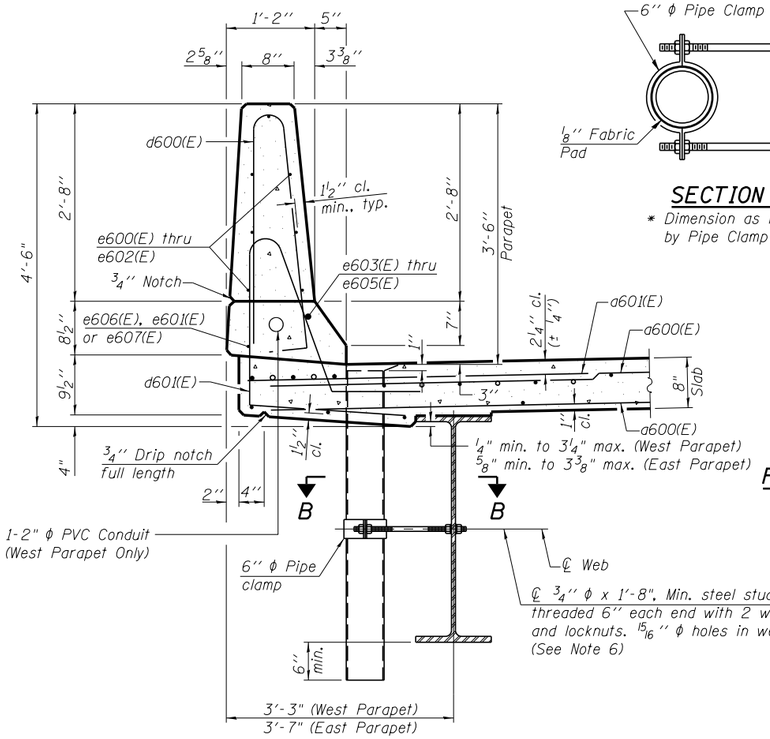

SECTION THRU PARAPET

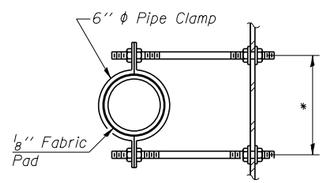

SECTION B-B

* Dimension as required by Pipe Clamp

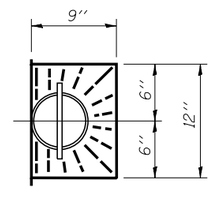

TOP PLAN

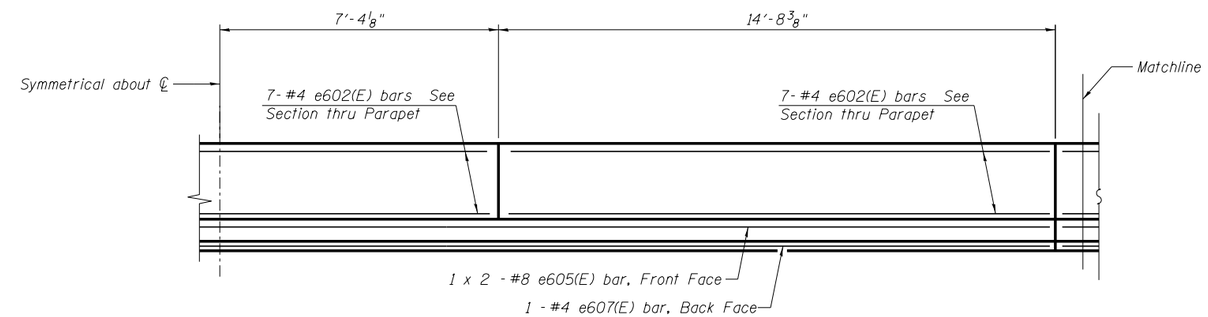

INSIDE ELEVATION OF PARAPET

West Parapet Shown, East Parapet similar

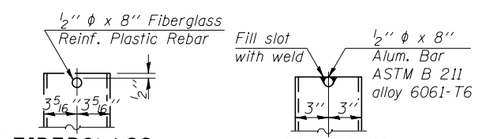

FIBERGLASS PIPE

ALUMINUM TUBE

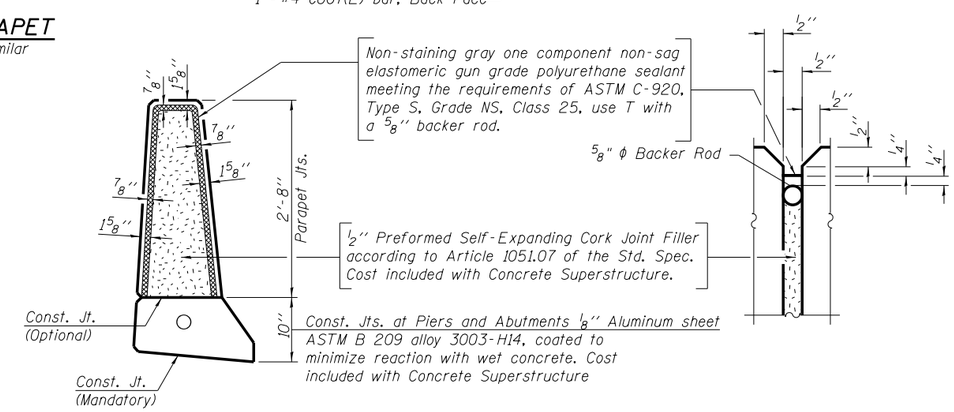

PARAPET JOINT DETAILS

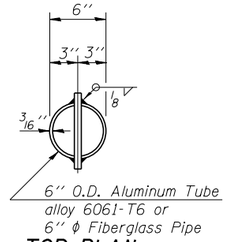

TOP PLAN

(Showing Aluminum Tube)

MINIMUM BAR LAP

(Parapet)
#4 bar = 2'-0"
#8 bar = 5'-2"

NOTES:

1. See sheet SH14 for Bill of Material.
2. Drains shall be located clear of all diaphragms.
3. Cleaning and painting of the exterior surfaces of the floor drains shall be performed under a separate painting contract.
4. Fiberglass pipe shall conform to ASTM D 2996, with short-time rupture strength hoop tensile stress of 30,000 p.s.i. minimum.
5. Galvanize clamping device according to AASHTO M232. Cost of clamping device and inserts is included with Floor Drains.
6. Holes shall be drilled in field for existing beam and may be either field drilled or shop drilled for proposed beam.

benesch engineers · scientists · planners
Alfred Benesch & Company
205 North Michigan Avenue, Suite 2400
Chicago, Illinois 60601
312-565-0450 Job No. 10093

FILE NAME =	USER NAME = jsurber	DESIGNED - CMK	REVISED -
		CHECKED - JAW	REVISED -
016-0488-60J16-013-Superstructure Details	PLOT SCALE =	DRAWN - CMK	REVISED -
	PLOT DATE = 12/20/2013	CHECKED - JAW	REVISED -

STATE OF ILLINOIS
DEPARTMENT OF TRANSPORTATION

SUPERSTRUCTURE DETAILS (1 OF 2)
STRUCTURE NO. 016-0488

SHEET NO. SH13 OF SH36 SHEETS

F.A.P. RTE.	SECTION	COUNTY	TOTAL SHEETS	SHEET NO.
373	2013-038B-R	COOK	821	751
		CONTRACT NO. 60J16		
		ILLINOIS FED. AID PROJECT		

Y:\chicago\10000S\10093\Eng_Docs_Phase_II\SN_016_0488_0489_1st_Ave_over_ICC_RR\Final 0488\016-0488-60J16-013-Superstructure Details 1 of 2.dgn
10:06:49 AM
7/24/2014

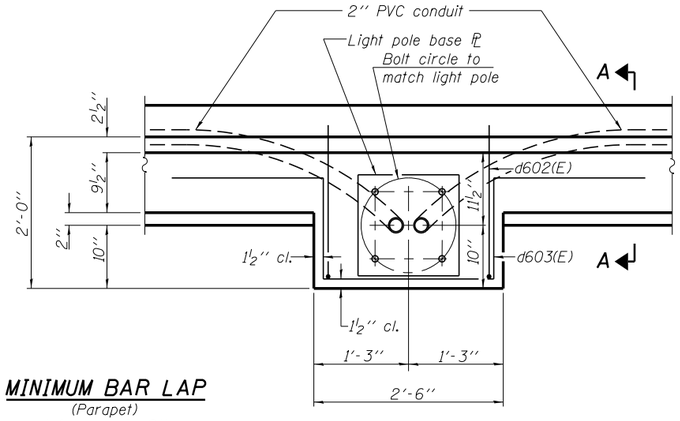

MINIMUM BAR LAP

(Parapet)
#4 bar = 2'-0''
#8 bar = 5'-2''

PLAN

Note:
Cost of anchor rods is included with Concrete Superstructure.

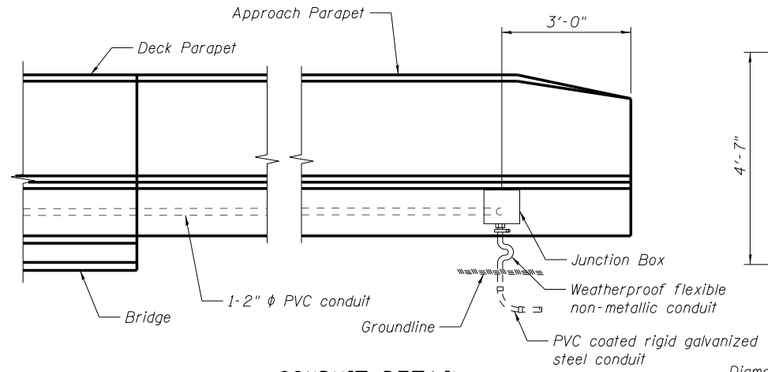

CONDUIT DETAIL

(North approach shown. South approach opposite hand)
(West parapet only)

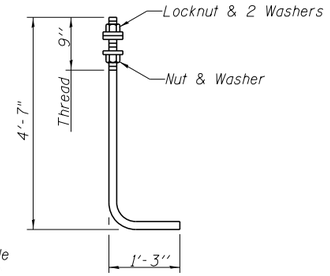

ANCHOR ROD

Diameter as specified for light poles.
(ASTM F 1554 Grade 105)

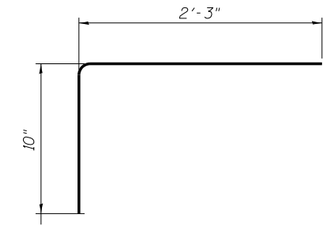

BAR v600(E)

SUPERSTRUCTURE BILL OF MATERIAL

Bar	No.	Size	Length	Shape
a600(E)	435	#5	54'-8"	
a601(E)	234	#6	6'-6"	
a605(E)	4	#5	56'-0"	
b600(E)	232	#5	45'-0"	
b601(E)	90	#6	31'-0"	
b602(E)	220	#5	36'-2"	
d600(E)	332	#5	6'-10"	
d601(E)	400	#6	7'-11"	
d602(E)	3	#6	5'-1"	
d603(E)	5	#6	7'-7"	
e600(E)	84	#4	13'-5"	
e601(E)	64	#4	9'-2"	
e602(E)	42	#4	14'-4"	
e603(E)	8	#8	23'-0"	
e604(E)	8	#8	9'-2"	
e605(E)	4	#8	24'-6"	
e606(E)	4	#4	40'-10"	
e607(E)	2	#4	43'-9"	
m600(E)	32	#6	31'-0"	
m601(E)	36	#5	4'-0"	
m602(E)	56	#6	6'-2"	
m603(E)	8	#6	4'-2"	
m604(E)	16	#6	3'-0"	
s600(E)	108	#5	8'-0"	
s601(E)	108	#5	9'-4"	
u600(E)	108	#5	2'-10"	
v600(E)	110	#5	3'-1"	
Reinforcement Bars, Epoxy Coated			Pound	65,480
Concrete Superstructure			Cu. Yd.	317.8
Bridge Deck Grooving			Sq. Yd.	962
Protective Coat			Sq. Yd.	1123
Floor Drains			Each	4

Bars indicated thus 1 x 2 - #8 etc. indicates 1 line of bars with 2 lengths per line.

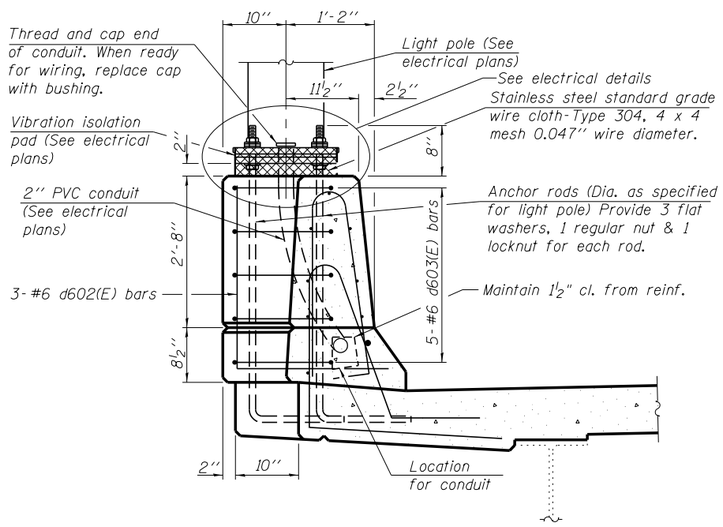

SECTION A-A

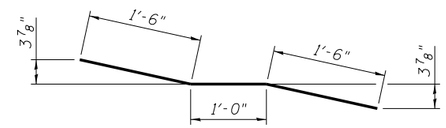

BAR m601(E)

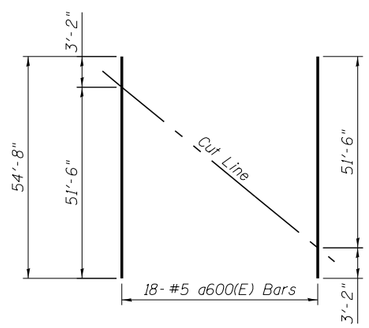

FIELD CUTTING DIAGRAM - TOP BARS

Order a600(E) full length. Cut as shown and use remainder of bars in opposite end.

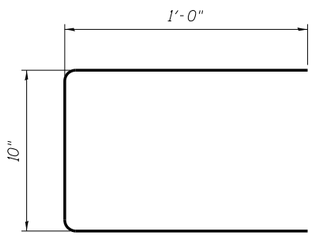

BAR u600(E)

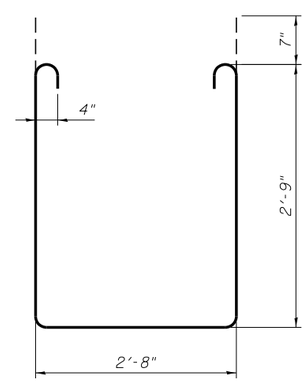

BAR s601(E)

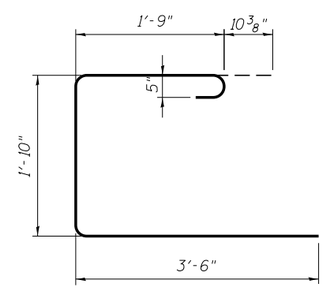

BAR s600(E)

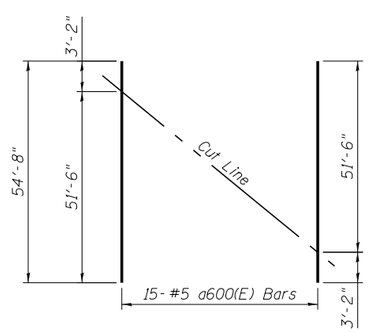

FIELD CUTTING DIAGRAM - BOTTOM BARS

Order a600(E) full length. Cut as shown and use remainder of bars in opposite end.

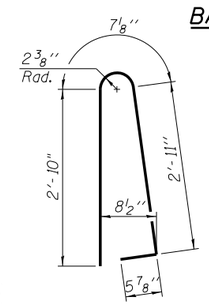

BAR d600(E)

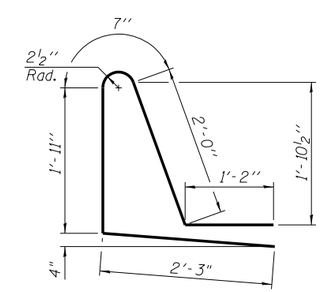

BAR d601(E)

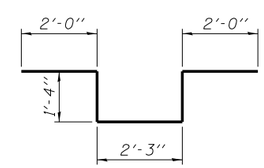

BAR d603(E)

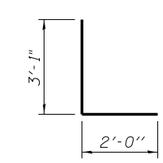

BAR d602(E)

benesch
engineers · scientists · planners
Alfred Benesch & Company
205 North Michigan Avenue, Suite 2400
Chicago, Illinois 60601
312-565-0450 Job No. 10093

FILE NAME = 016-0488-60J16-014-Superstructure Details	USER NAME = jsurber	DESIGNED - CMK	REVISED -
		CHECKED - JAW	REVISED -
	PLOT SCALE =	DRAWN - CMK	REVISED -
	PLOT DATE = 12/20/2013	CHECKED - JAW	REVISED -

STATE OF ILLINOIS
DEPARTMENT OF TRANSPORTATION

SUPERSTRUCTURE DETAILS (2 OF 2)
STRUCTURE NO. 016-0488

SHEET NO. SH14 OF SH36 SHEETS

F.A.P. RTE.	SECTION	COUNTY	TOTAL SHEETS	SHEET NO.
373	2013-038B-R	COOK	821	752
		CONTRACT NO. 60J16		
		ILLINOIS FED. AID PROJECT		

Y:\chicago\10000S\10093\Eng_Docs_Phase_II\SN_016_0488_0489_1st_Ave_over_ICC_RR\Final 0488\016-0488-60J16-014-Superstructure Details 2 of 2.dgn
9:07:32 AM 7/9/2014

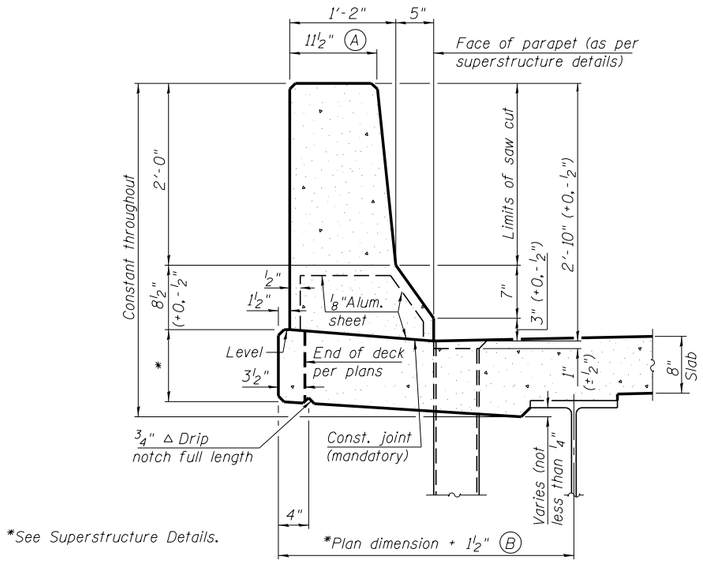

*See Superstructure Details.

34" F SHAPE PARAPET SECTION

(Showing dimensions)

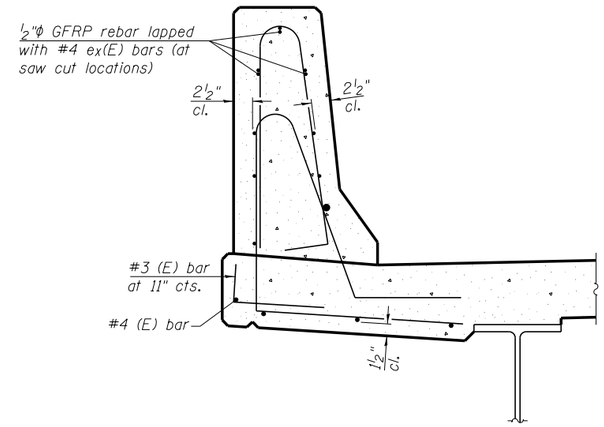

SECTION

(34" parapet shown - 42" parapet similar)
(Showing reinforcement clearances for slip forming and additional reinforcement bars)

GENERAL NOTES

All dimensions shall remain the same as shown on superstructure details, except dimensions A and B which are to be revised as shown to provide additional clearance. Additional concrete needed to revise dimension A and B = 0.0165 cu. yds./ft. for 34" parapet or = 0.0223 cu. yds./ft. for 42" parapet.

Place aluminum sheet in curb portion at and near piers. Full thickness saw cut at all joint locations in lieu of cork joint filler.

Steel superstructure shown. Other superstructure types similar.

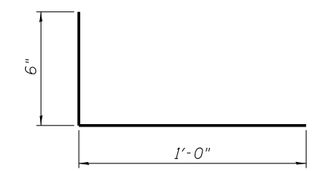

#3 (E) BAR

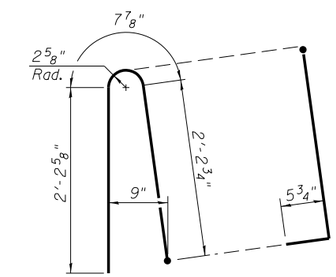

ALTERNATE BAR d(E)

(For 34" parapet when conduit is present)

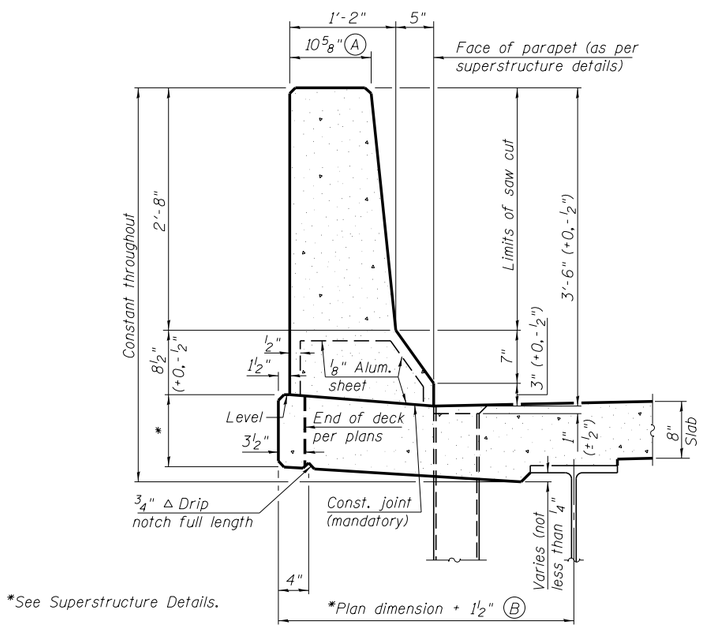

*See Superstructure Details.

42" F SHAPE PARAPET SECTION

(Showing dimensions)

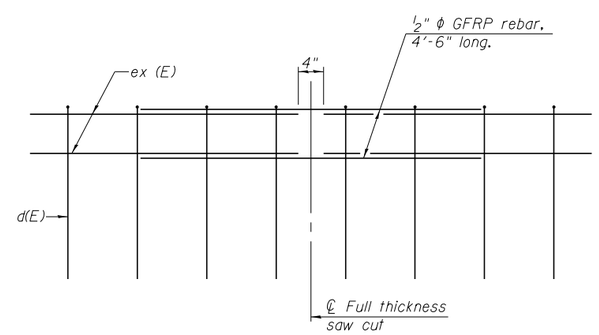

GFRP REBAR STIFFENING DETAIL

(Place as shown in parapet section at each parapet joint location.)

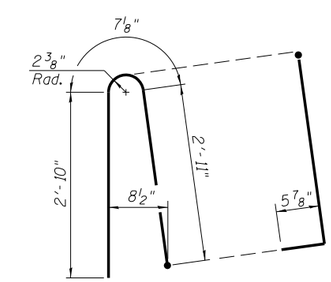

ALTERNATE BAR d(E)

(For 42" parapet when conduit is present)

benesch engineers · scientists · planners

Alfred Benesch & Company
205 North Michigan Avenue, Suite 2400
Chicago, Illinois 60601
312-565-0450 Job No. 10093

SFP 34-42 8-16-12

FILE NAME = 016-0488-60J16-015-Concrete Parapet Slip Forming Option.dgn	USER NAME = tjanicke	DESIGNED - CMK	REVISED -
		CHECKED - JAW	REVISED -
		DRAWN - CMK	REVISED -
	PLOT DATE = 12/20/2013	CHECKED - JAW	REVISED -

STATE OF ILLINOIS
DEPARTMENT OF TRANSPORTATION

CONCRETE PARAPET SLIPFORMING OPTION
STRUCTURE NO. 016-0488

SHEET NO. SH15 OF SH36 SHEETS

F.A.P. RTE.	SECTION	COUNTY	TOTAL SHEETS	SHEET NO.
373	2013-038B-R	COOK	821	753

CONTRACT NO. 60J16

ILLINOIS FED. AID PROJECT

X:\10000S\10093\Eng_Docs_Phase_II\SN_016_0488_0489_1st_Ave_over_ICC_RR\Final\Final 0488\016-0488-60J16-015-Concrete Parapet Slip Forming Option.dgn 3:02:05 PM 6/23/2014

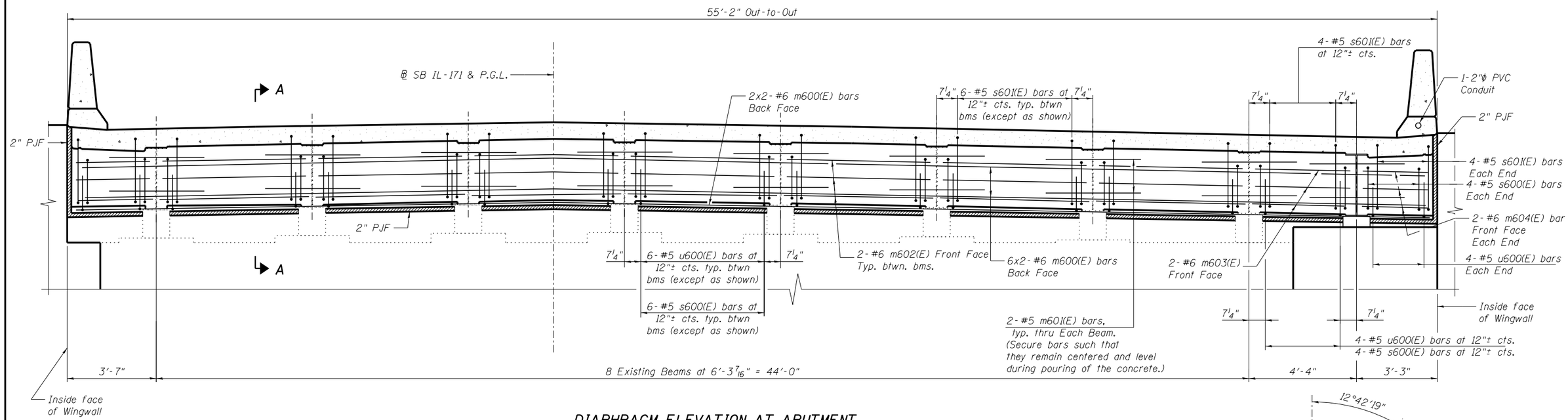

DIAPHRAGM ELEVATION AT ABUTMENT

(South Abutment shown looking Downstation)
(North Abutment - Opposite Hand)

MINIMUM BAR LAP

#6 bar = 3'-0"

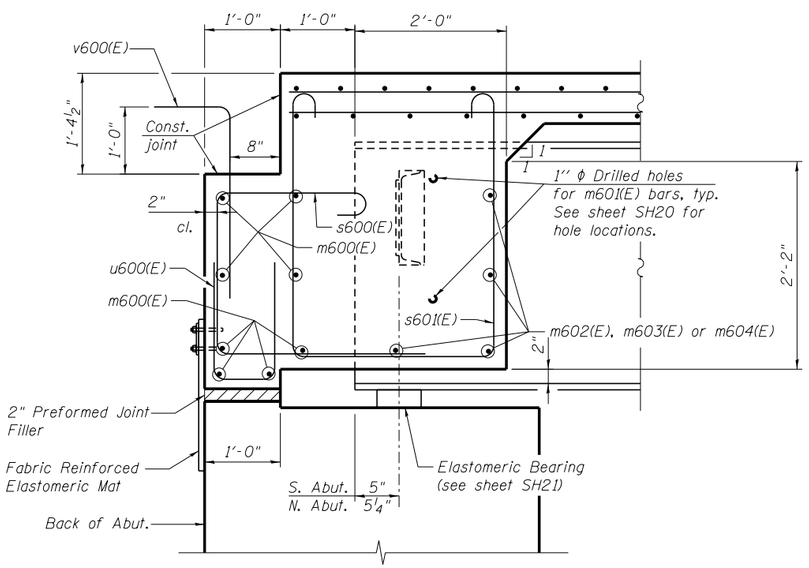

SECTION A-A

(at abutment widening, dim. at Rt. L's except as noted)

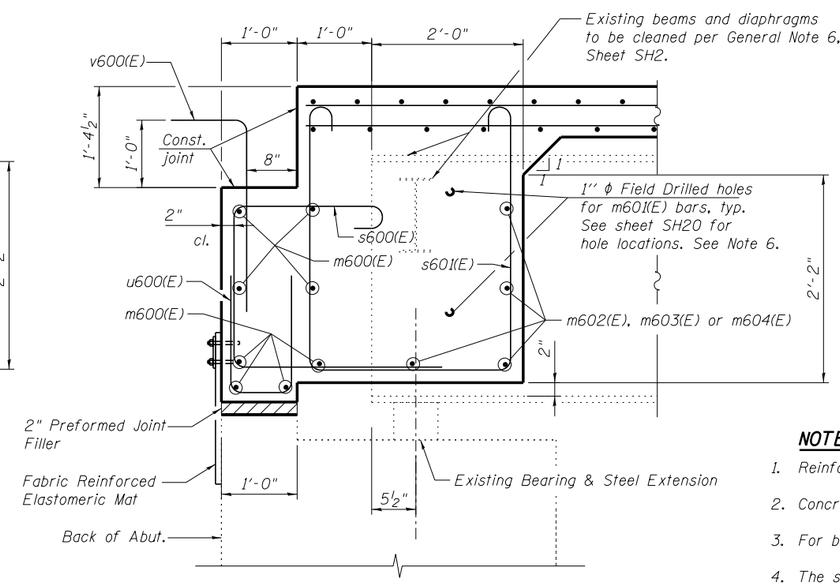

SECTION A-A

(at existing abutment, dim. at Rt. L's except as noted)

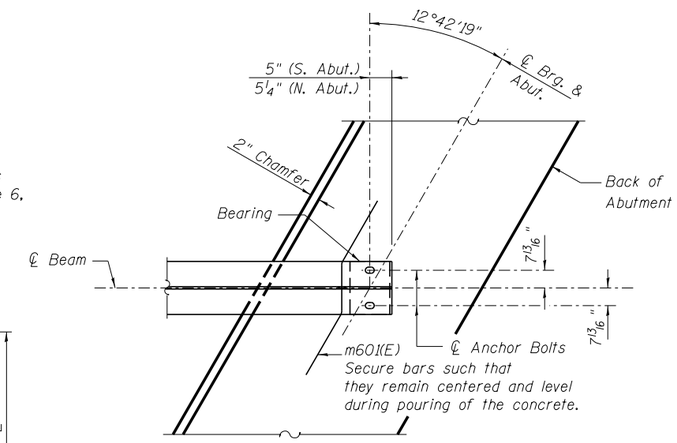

PARTIAL PLAN AT ABUTMENT

(Showing bottom flange of beam)

NOTES:

1. Reinforcement bars in diaphragm are billed with Superstructure on sheet SH14.
2. Concrete in diaphragm is included with Concrete Superstructure on sheet SH14.
3. For bar bend details, see sheet SH14.
4. The s600(E), s601(E) and u600(E) bars shall be placed parallel to the beams. Spacing for these bars shall be at right angles to the beams.
5. For bearing details, see sheets SH21 and SH22.
6. Cost of Field Drilling included with "Furnishing and Erecting Structural Steel".

benesch
engineers · scientists · planners
Alfred Benesch & Company
205 North Michigan Avenue, Suite 2400
Chicago, Illinois 60601
312-565-0450 Job No. 10093

FILE NAME = 016-0488-60J16-016-Semi-Integral Abutment Diaphragm Details.dgn	USER NAME = tjanicke	DESIGNED - CMK	REVISED -
		CHECKED - JAW	REVISED -
	PLOT SCALE =	DRAWN - CMK	REVISED -
	PLOT DATE = 12/20/2013	CHECKED - JAW	REVISED -

STATE OF ILLINOIS
DEPARTMENT OF TRANSPORTATION

SEMI-INTEGRAL ABUTMENT DIAPHRAGM DETAILS
STRUCTURE NO. 016-0488

SHEET NO. SH16 OF SH36 SHEETS

F.A.P. RTE.	SECTION	COUNTY	TOTAL SHEETS	SHEET NO.
373	2013-038B-R	COOK	821	754
		CONTRACT NO. 60J16		
		ILLINOIS FED. AID PROJECT		

X:\10000S\10093\Eng_Docs_Phase_II\SN_016_0488_0489_1st_Ave_over_ICC_RR\Final 0488\016-0488-60J16-016-Semi-Integral Abutment Diaphragm Details.dgn
3:02:07 PM 6/23/2014

Notes:
See sheet SH18 for Sections C-C & D-D and View E-E.
a602(E) and a603(E) bar spacings measured along ℄ Rdwy.

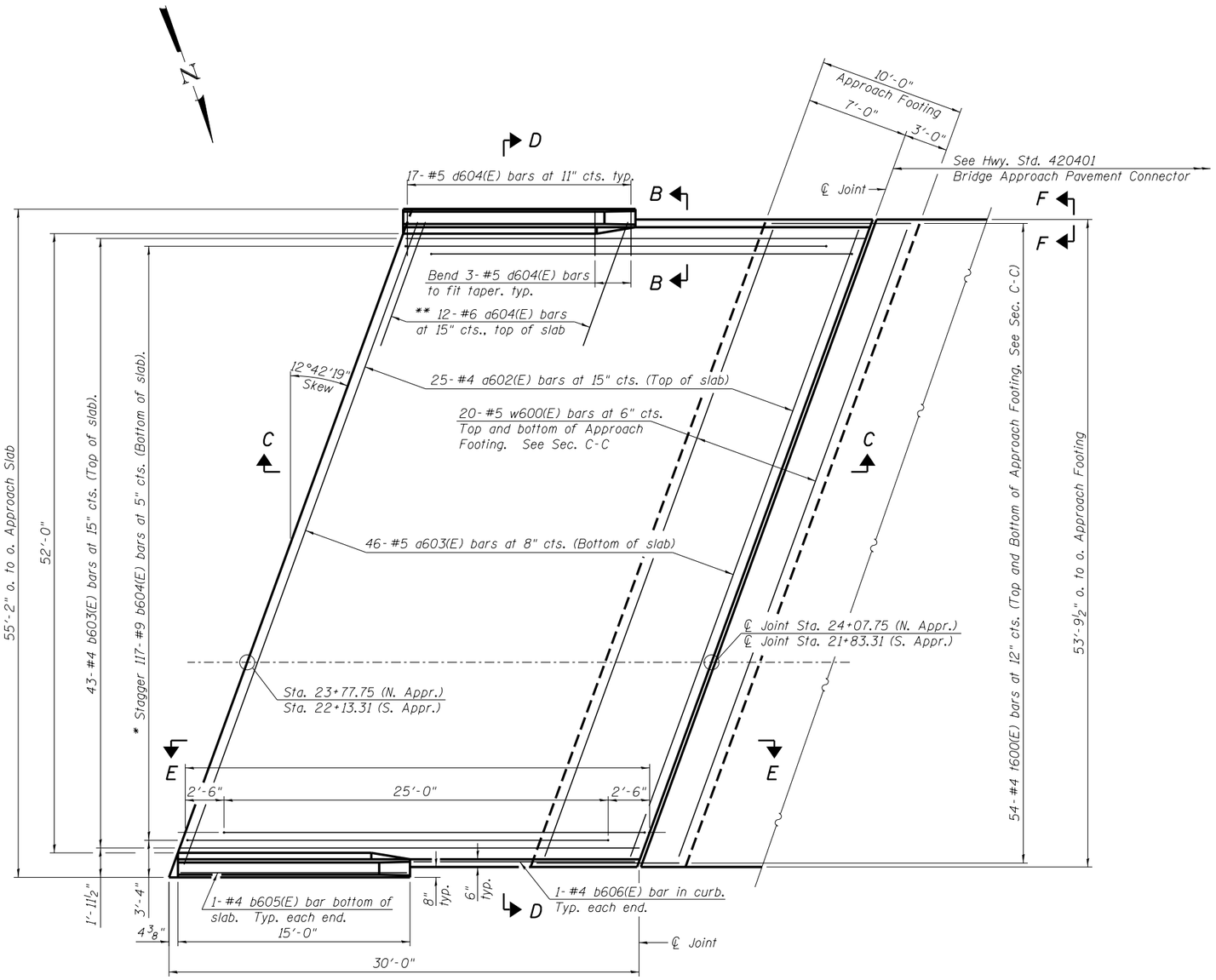

PLAN

(North Approach Slab shown, South Approach Slab similar)

* Tilt #9 b604(E) bars as required to maintain clearance.
** Space between a602(E) bars, typ. each parapet.

*** Cost included with Concrete Superstructure.

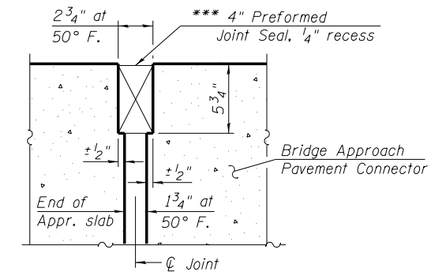

RIGID PAVEMENT

DETAIL A

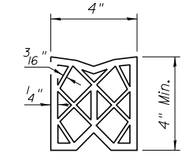

PREFORMED JOINT SEAL

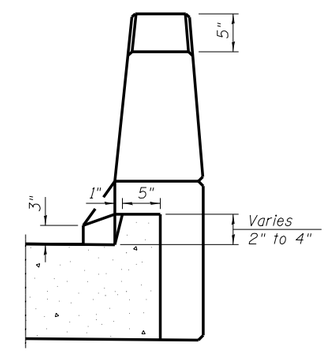

VIEW B-B

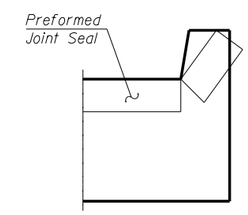

VIEW F-F

Angle Preformed Joint Seal at 45° at curbs when req'd for drainage.

benesch engineers · scientists · planners
Alfred Benesch & Company
205 North Michigan Avenue, Suite 2400
Chicago, Illinois 60601
312-565-0450 Job No. 10093

FILE NAME = 016-0488-60J16-017-Bridge Approach Slab Details 1 of 2.dgn	USER NAME = jsurber	DESIGNED - CMK	REVISED -	STATE OF ILLINOIS DEPARTMENT OF TRANSPORTATION	BRIDGE APPROACH SLAB DETAILS (1 OF 2) STRUCTURE NO. 016-0488	F.A.P. RTE.	SECTION	COUNTY	TOTAL SHEETS / SHEET NO.
		CHECKED - JAW	REVISED -			373	2013-038B-R	COOK	821 / 755
	PLOT SCALE = 1:1	DRAWN - CMK	REVISED -			CONTRACT NO. 60J16			
	PLOT DATE = 12/20/2013	CHECKED - JAW	REVISED -		SHEET NO. SH17 OF SH36 SHEETS	ILLINOIS FED. AID PROJECT			

Y:\chicago\10000S\10093\Eng_Docs_Phase_II\SN_016_0488_0489_1st_Ave_over_ICC_RR\Final 0488\016-0488-60J16-017-Bridge Approach Slab Details 1 of 2.dgn
12:10:00 PM 7/16/2014

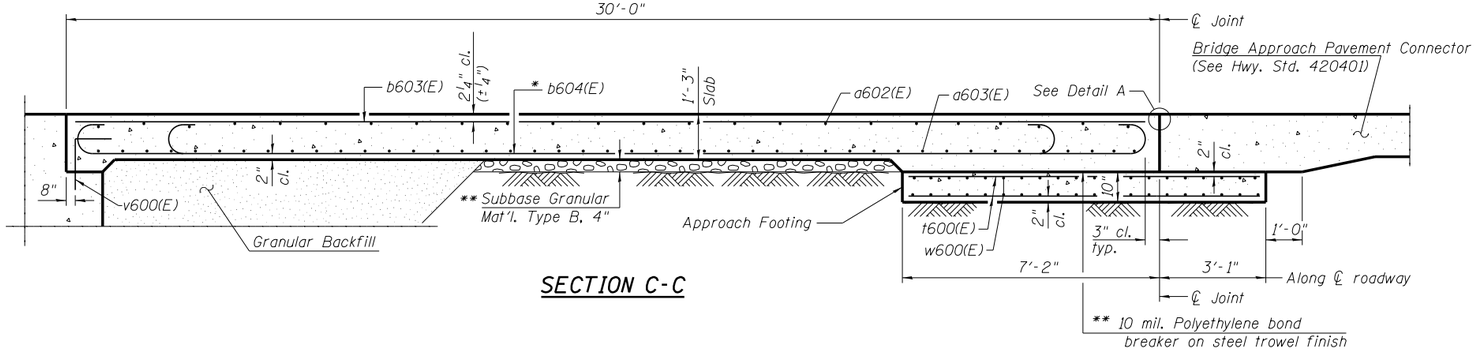

SECTION C-C

Notes:
See sheet SH17 for Detail A and View B-B.
Approach slab and parapet concrete shall be paid for as Concrete Superstructure.
Approach footing concrete shall be paid for as Concrete Structures.
Reinforcement shall be paid for as Reinforcement Bars, Epoxy Coated.
For v600(E) bar details, see sheet SH14.
The approach footing maximum applied service bearing pressure (Qmax) = 2.0 ksf.
Cost of excavation for approach footing included with Concrete Structures.
For Granular Backfill and drainage treatment details, see sheet SH2.
For additional parapet details, see sheet SH13.
Existing approach slabs supported by timber piles. Remove top 2' of existing timber piles before pouring approach footing. Cost included with Approach Slab Removal.
See Special Provision for Approach Slab Removal.
See Sheet SH14 for lighting conduit and junction box details.

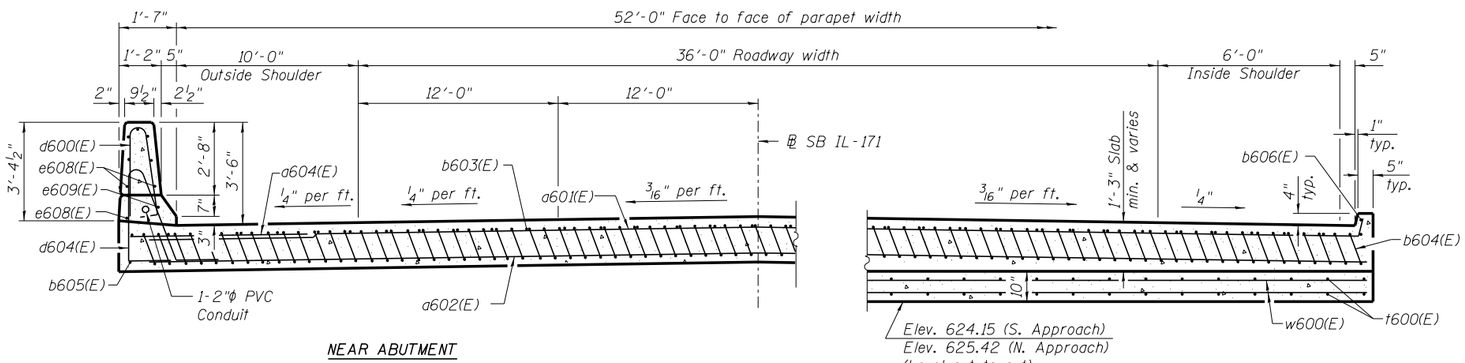

NEAR ABUTMENT

AT APPROACH FOOTING

SECTION D-D

(See Plan for dimensions not shown)

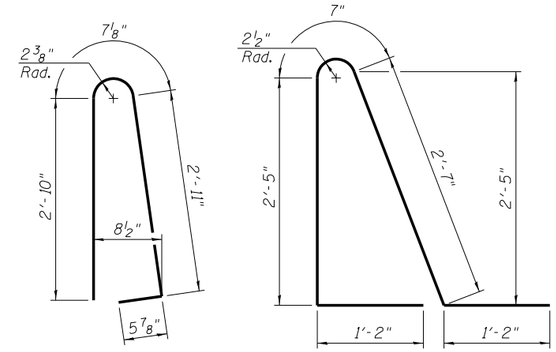

BAR d600(E)

BAR d604(E)

* Tilt #9 b604(E) bars as required to maintain clearance.

** Cost included with Concrete Superstructure.

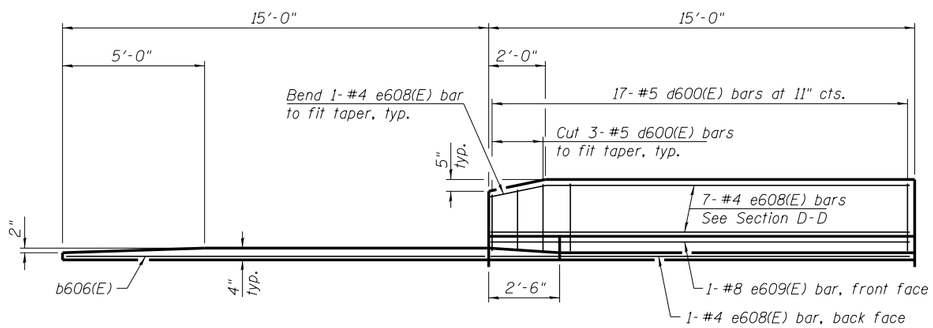

VIEW E-E

TWO APPROACHES
BILL OF MATERIAL

Bar	No.	Size	Length	Shape
a602(E)	50	#4	53'-7"	
a603(E)	92	#5	52'-11"	
a604(E)	48	#6	6'-6"	
b603(E)	86	#4	29'-8"	
b604(E)	234	#9	29'-9"	
b605(E)	4	#4	14'-8"	
b606(E)	4	#4	14'-8"	
d600(E)	68	#5	6'-10"	
d604(E)	68	#5	7'-11"	
e608(E)	32	#4	14'-8"	
e609(E)	4	#8	14'-8"	
t600(E)	216	#4	9'-8"	
w600(E)	80	#5	53'-7"	
Concrete Superstructure			Cu. Yd.	161.0
Concrete Structures			Cu. Yd.	34.0
Reinforcement Bars, Epoxy Coated			Pound	40.170
Bridge Deck Grooving			Sq. Yd.	347
Protective Coat			Sq. Yd.	376

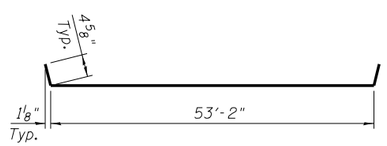

BAR a602(E)

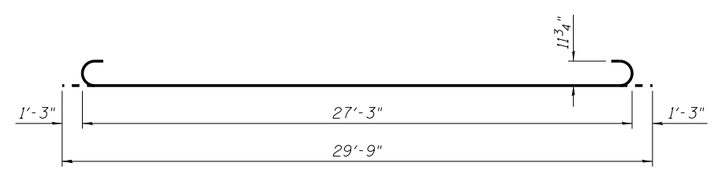

BAR b604(E)

benesch
engineers · scientists · planners
Alfred Benesch & Company
205 North Michigan Avenue, Suite 2400
Chicago, Illinois 60601
312-565-0450 Job No. 10093

FILE NAME = 016-0488-60J16-018-Bridge Approach Slab Details SH 2.dgn	USER NAME = jsurber	DESIGNED - CMK	REVISED -
		CHECKED - JAW	REVISED -
		DRAWN - CMK	REVISED -
	PLOT DATE = 12/20/2013	CHECKED - JAW	REVISED -

STATE OF ILLINOIS
DEPARTMENT OF TRANSPORTATION

BRIDGE APPROACH SLAB DETAILS (2 OF 2)
STRUCTURE NO. 016-0488
SHEET NO. SH18 OF SH36 SHEETS

F.A.P. RTE.	SECTION	COUNTY	TOTAL SHEETS	SHEET NO.
373	2013-038B-R	COOK	821	756
		CONTRACT NO. 60J16		
		ILLINOIS FED. AID PROJECT		

Y:\chicago\10000S\10093\Eng_Docs_Phase_II\SN_016_0488_0489_1st_Ave_over_ICC_RR\Final 0488\016-0488-60J16-018-Bridge Approach Slab Details 2 of 2.dgn
9:07:33 AM 7/9/2014

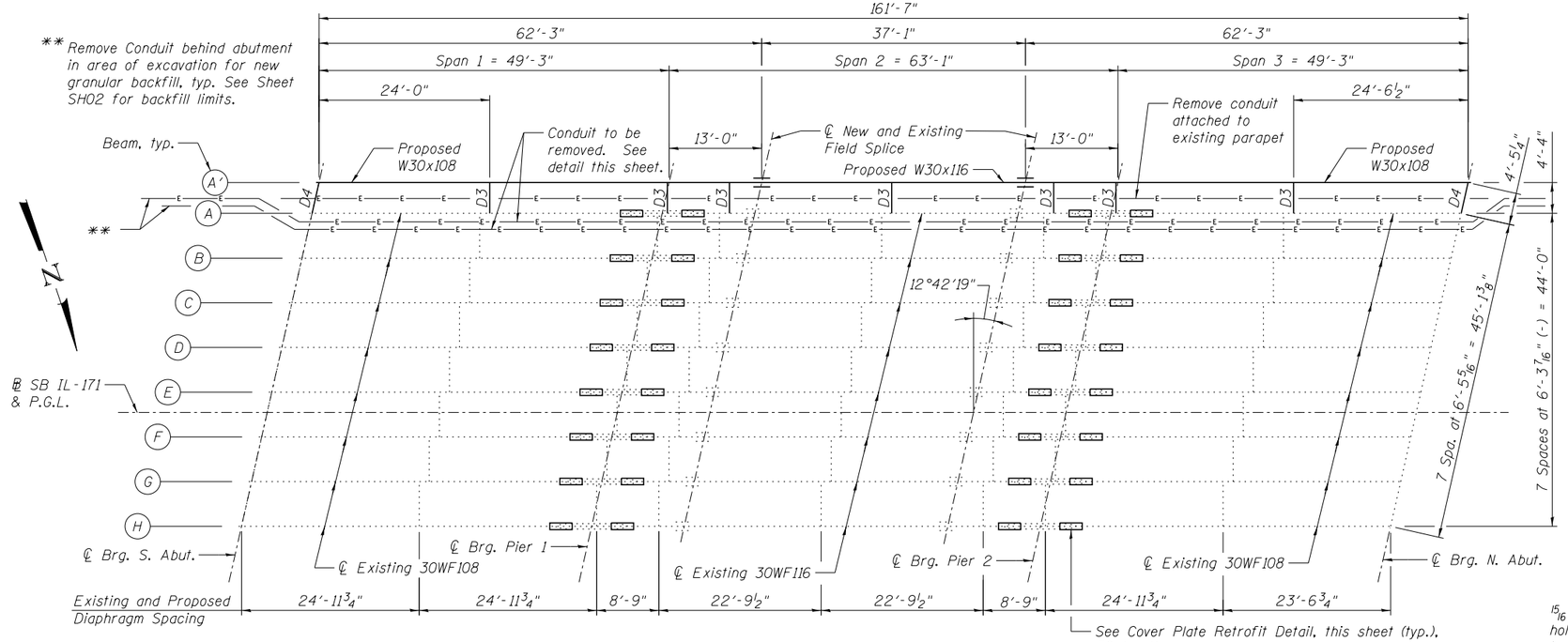

FRAMING PLAN

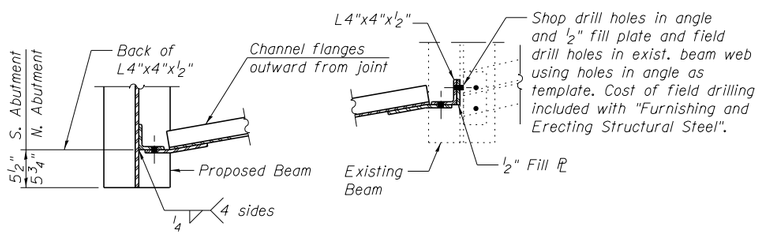

SECTION B-B

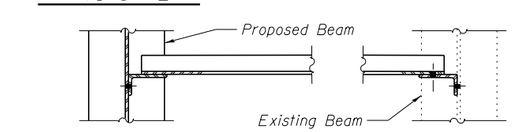

SECTION A-A

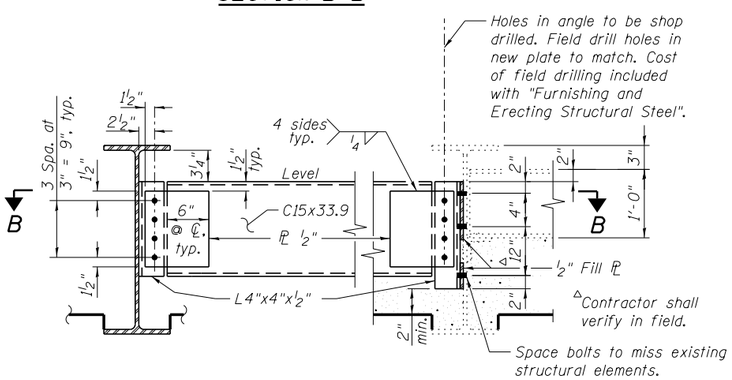

END DIAPHRAGM D4

2 Required

Note:
All bolts shall be ¾" ϕ HS bolts in 15/16" ϕ holes.
Two hardened washers required for each set of oversized holes.

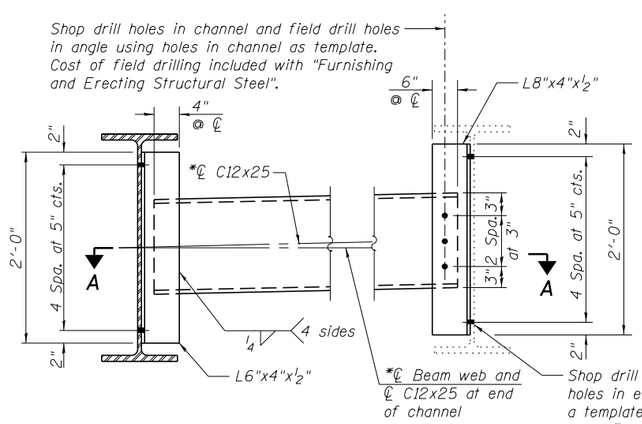

INTERIOR DIAPHRAGM D3

7 Required

Notes:
All bolts shall be ¾" ϕ HS bolts in 15/16" ϕ holes.

Two hardened washers required for each set of oversized holes.

*Alternate C12x30 channels are permitted to facilitate material acquisition. Calculated weight of structural steel is based on the lighter section. The alternate, if utilized, shall be provided at no additional cost to the Department.

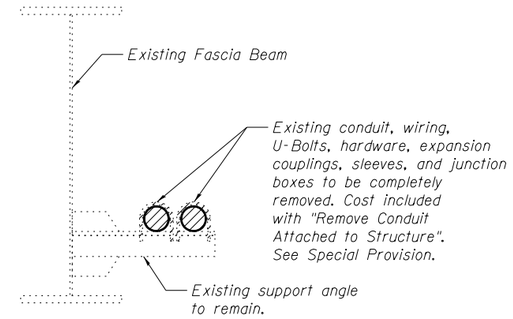

CONDUIT REMOVAL DETAIL

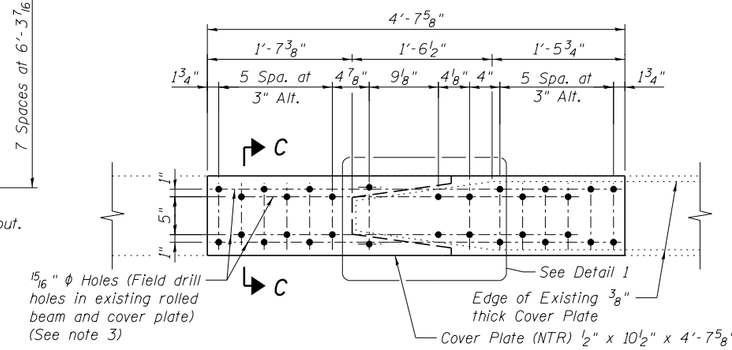

COVER PLATE RETROFIT DETAIL

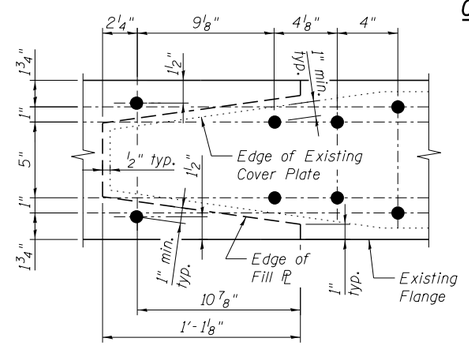

DETAIL 1

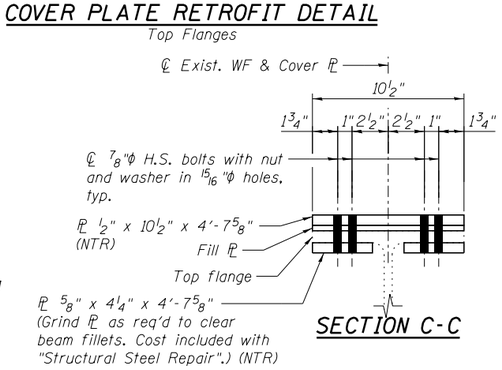

SECTION C-C

NOTES:

1. Load carrying components designated "NTR" shall conform to the Impact Testing Requirement, Zone 2.
2. Structural steel plates for cover plate retrofit shall conform to the requirements of AASHTO M270 Grade 50.
3. Cost of Cover Plate Retrofit and associated field drilling to be included with "Structural Steel Repair".
4. All cross frames or diaphragms shall be installed as steel is erected and secured with erection pins and bolts except as otherwise noted. Individual cross frames or diaphragms at supports may be temporarily disconnected to install bearing anchor rods.
5. The Engineer will inspect all existing bearing anchor bolts to ascertain their condition. Any damaged anchor bolts shall be reported to the BBS for further direction. The Contractor shall provide all means and access for the Engineer to perform the anchor bolt inspections. All costs associated with providing the access shall be considered included in the unit price for "Furnishing and Erecting Structural Steel".

benesch engineers · scientists · planners
Alfred Benesch & Company
205 North Michigan Avenue, Suite 2400
Chicago, Illinois 60601
312-565-0450 Job No. 10093

FILE NAME =	USER NAME = jsurber	DESIGNED - CMK	REVISED -
		CHECKED - JAW	REVISED -
016-0488-60J16-019-Framing Plan.dgn	PLOT SCALE =	DRAWN - CMK	REVISED -
	PLOT DATE = 12/20/2013	CHECKED - JAW	REVISED -

STATE OF ILLINOIS
DEPARTMENT OF TRANSPORTATION

FRAMING PLAN
STRUCTURE NO. 016-0488
SHEET NO. SH19 OF SH36 SHEETS

F.A.P. RTE.	SECTION	COUNTY	TOTAL SHEETS	SHEET NO.
373	2013-038B-R	COOK	821	757
		CONTRACT NO. 60J16		
		ILLINOIS FED. AID PROJECT		

Y:\chicago\10000S\10093\Eng_Docs_Phase_II\SN_016_0488_0489_1st_Ave_over_ICC_RR\Final\Final 0488\016-0488-60J16-019-Framing Plan.dgn
2:14:50 PM 7/22/2014

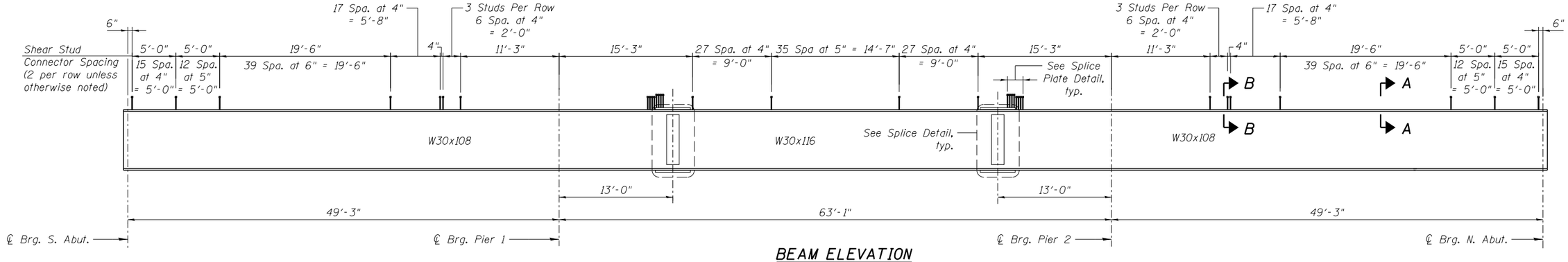

BEAM ELEVATION

(Proposed Beam)
(Existing Beams to have same Shear Stud Spacing)
New beam shall be AASHTO M270 Grade 50 and NTR

*TOP OF BEAM ELEVATIONS	
Location	Beam A'
CL. BRG. S. ABUT.	625.95
CL. BRG. PIER 1	626.18
FS #1	626.24
FS #2	626.42
CL. BRG. PIER 2	626.48
CL. BRG. N. ABUT.	626.70

*For Fabrication Only

△ 7/8"φ rivets on existing beams

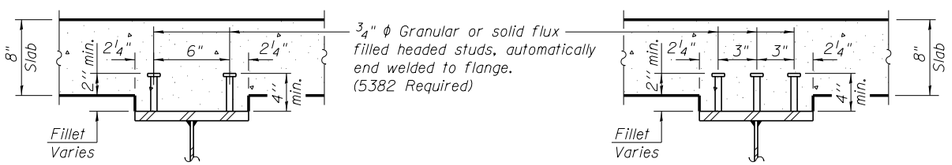

SECTION A-A

SECTION B-B

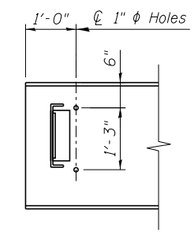

END ELEVATION

(typ E.E.)
Proposed beam shown
Existing beams similar

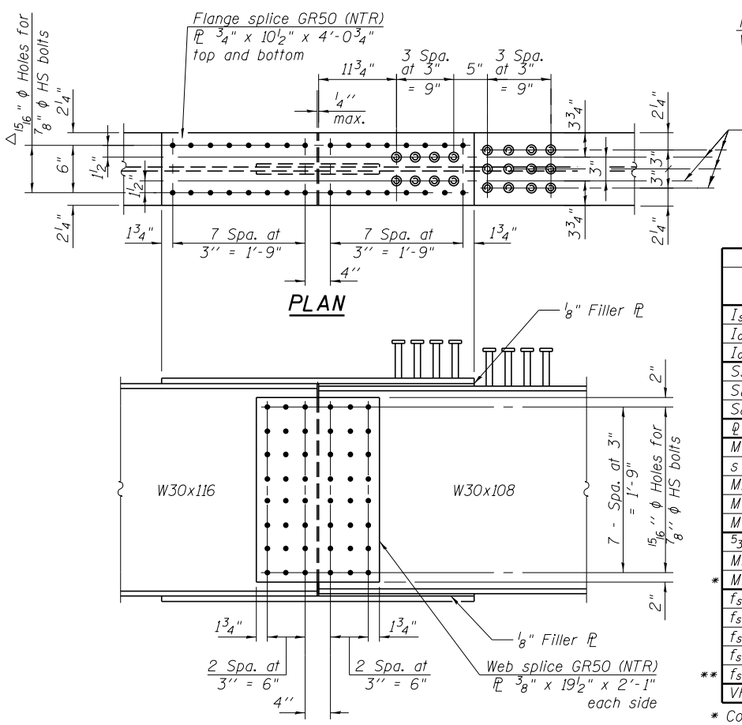

PLAN

ELEVATION

SPLICE DETAIL

(2 Required)
North splice shown, South splice opposite hand

EXISTING INTERIOR BEAM MOMENT TABLE		0.4 Sp. 1 0.6 Sp. 3	Pier 1 or 2	.5 Span 2
I_s	(in^4)	4470	6007	4930
$I_c(n)$	(in^4)	15130	---	16226
$I_c(3n)$	(in^4)	10854	---	11548
S_s	(in^3)	299	393	329
$S_c(n)$	(in^3)	509	---	549
$S_c(3n)$	(in^3)	454	---	489
w_D	(k/')	0.781	0.781	0.789
M_{wD}	('k)	125.1	255.4	136.0
s_{wD}	(k/')	0.1	---	0.1
M_{sD}	('k)	16.1	---	17.2
M_{LL}	('k)	278.4	236.9	299.4
M_{IM}	('k)	79.9	65.4	79.6
$\frac{5}{3}[M_{LL}+I]$	('k)	597	504	632
M_a	('k)	960	987	1020
* M_u	('k)	1591	---	2100
f_s w_D non-comp	(ksi)	5.0	7.8	5.0
f_s w_L (comp)	(ksi)	0.4	---	0.4
f_s $\frac{5}{3}[M_{LL}+M_I]$	(ksi)	14.1	15.4	13.8
f_s (Overload)	(ksi)	19.5	23.2	19.2
** f_s (Total)	(ksi)	---	30.1	---
VR	(k)	40.3	---	45.7

* Compact section
** Braced non-compact and partially braced section

PROPOSED EXTERIOR BEAM MOMENT TABLE		0.4 Sp. 1 0.6 Sp. 3	Pier 1 or 2	.5 Span 2
I_s	(in^4)	4470	4470	4930
$I_c(n)$	(in^4)	14334	---	15348
$I_c(3n)$	(in^4)	10069	---	10730
S_s	(in^3)	299	299	329
$S_c(n)$	(in^3)	500	---	539
$S_c(3n)$	(in^3)	414	---	475
w_D	(k/')	0.759	0.759	0.768
M_{wD}	('k)	125	239.7	140.9
s_{wD}	(k/')	0.1	---	0.1
M_{sD}	('k)	16.4	---	17.8
M_{LL}	('k)	228.4	187.8	246.6
M_{IM}	('k)	65.5	51.8	65.5
$\frac{5}{3}[M_{LL}+I]$	('k)	490	399	520
M_a	('k)	821	831	883
* M_u	('k)	2253	---	2448
f_s w_D non-comp	(ksi)	5.0	9.6	5.1
f_s w_L (comp)	(ksi)	0.5	---	0.4
f_s $\frac{5}{3}[M_{LL}+M_I]$	(ksi)	11.8	16.0	11.6
f_s (Overload)	(ksi)	17.2	25.6	17.2
** f_s (Total)	(ksi)	---	33.3	---
VR	(k)	25.7	---	29.1

* Compact section
** Braced non-compact and partially braced section

EXISTING EXTERIOR BEAM REACTION TABLE		Abut.	Pier
*** R_{DL}	(k)	16.57	55.55
R_{LL}	(k)	35.74	43.12
R_I	(k)	10.26	9.09
R_{Total}	(k)	62.57	107.76

*** Reaction includes approach slab and concrete diaphragm

PROPOSED EXTERIOR BEAM REACTION TABLE		Abut.	Pier
*** R_{DL}	(k)	16.30	53.89
R_{LL}	(k)	25.85	31.75
R_I	(k)	7.41	6.69
R_{Total}	(k)	49.56	92.33

*** Reaction includes approach slab and concrete diaphragm

NOTES:

1. Load carrying components designated "NTR" shall conform to the Impact Testing Requirement, Zone 2.
2. Stud shear connectors shall be attached to all existing beams at the same spacing as shown for the proposed beam. Cost included with Stud Shear Connectors.

I_s, S_s: Non-composite moment of inertia and section modulus of the steel section used for computing f_s(Total and Overload) due to non-composite dead loads ($in.^4$ and $in.^3$).
$I_c(n)$, $S_c(n)$: Composite moment of inertia and section modulus of the steel and deck based upon the modular ratio, "n", used for computing f_s(Total and Overload) due to short-term composite live loads ($in.^4$ and $in.^3$).
$I_c(3n)$, $S_c(3n)$: Composite moment of inertia and section modulus of the steel and deck based upon 3 times the modular ratio, "3n", used for computing f_s(Total and Overload) due to long-term composite (superimposed) dead loads ($in.^4$ and $in.^3$).
Z: Plastic Section Modulus of the steel section in non-composite areas ($in.^3$).
w_D: Un-factored non-composite dead load (kips/ft.).
M_{wD}: Un-factored moment due to non-composite dead load (kip-ft.).
s_{wD}: Un-factored long-term composite (superimposed) dead load (kips/ft.)
M_{sD}: Un-factored moment due to long-term composite (superimposed) dead load (kip-ft.).
M_{LL}: Un-factored live load moment (kip-ft.).
M_I: Un-factored moment due to impact (kip-ft.).
M_a: Factored design moment (kip-ft.).
$1.3\ [M_{wD} + M_{sD} + \frac{5}{3}(M_{LL} + M_I)]$
M_u: Compact composite moment capacity according to AASHTO LFD 10.50.1.1 or compact non-composite moment capacity according to AASHTO LFD 10.48.1 (kip-ft.).
f_s (Overload): Sum of stresses as computed from the moments below (ksi).
$M_{wD} + M_{sD} + \frac{5}{3}(M_{LL} + M_I)$
f_s (Total): Sum of stresses as computed from the moments below on non-compact section (ksi).
$1.3\ [M_{wD} + M_{sD} + \frac{5}{3}(M_{LL} + M_I)]$
VR: Maximum M_{LL} + impact shear range within the composite portion of the span for stud shear connector design (kips).

benesch engineers · scientists · planners
Alfred Benesch & Company
205 North Michigan Avenue, Suite 2400
Chicago, Illinois 60601
312-565-0450 Job No. 10093

FILE NAME = 016-0488-60J16-020-Structural Steel Details.dgn	USER NAME = jsurber	DESIGNED - CMK	REVISED -	STATE OF ILLINOIS DEPARTMENT OF TRANSPORTATION	STRUCTURAL STEEL DETAILS STRUCTURE NO. 016-0488	F.A.P. RTE. 373	SECTION 2013-038B-R	COUNTY COOK	TOTAL SHEETS 821	SHEET NO. 758
		CHECKED - JAW	REVISED -					CONTRACT NO. 60J16		
	PLOT SCALE =	DRAWN - CMK	REVISED -		SHEET NO. 20 OF 36 SHEETS		ILLINOIS FED. AID PROJECT			
	PLOT DATE = 12/20/2013	CHECKED - JAW	REVISED -							

Y:\chicago\10000S\10093\Eng_Docs_Phase_II\SN_016_0488_0489_1st_Ave_over_ICC_RR\Final\Final 0488\016-0488-60J16-020-Structural Steel Details.dgn 9:07:35 AM 7/9/2014

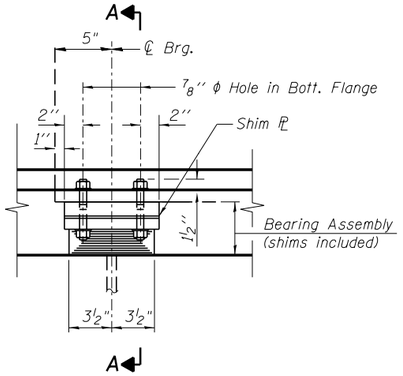

ELEVATION

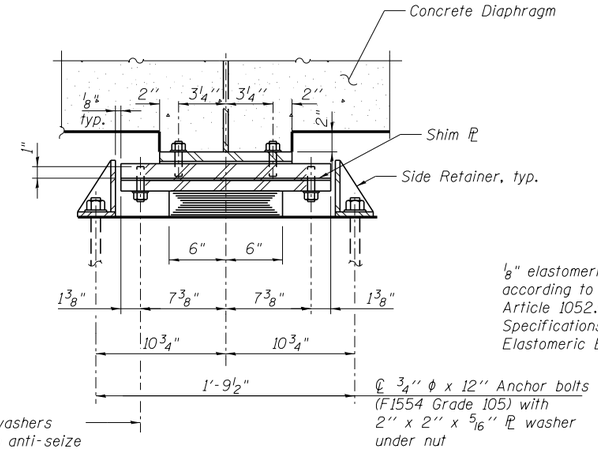

SECTION A-A

TYPE I ELASTOMERIC EXP. BRG. SOUTH ABUTMENT

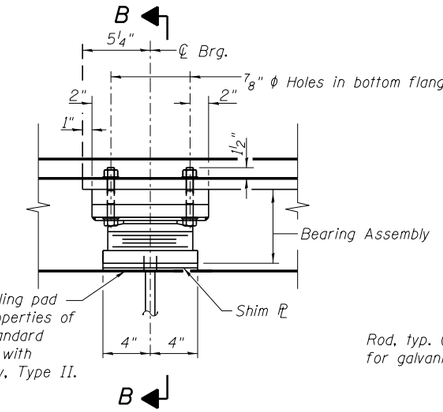

ELEVATION AT ABUT.

Note A:
ASTM A572 Gr. 50, A588 or similar material with Fy ≥ 50 ksi.
Rod dia. = 1 1/2"

Note B:
Bolt engagement 1 1/4" min., 1 5/8" max., allowing up to 3/8" adjustment shims. Tap full threads in rod 1 3/4" deep. Provide 1/4" ϕ galvanized vent hole below full thread.

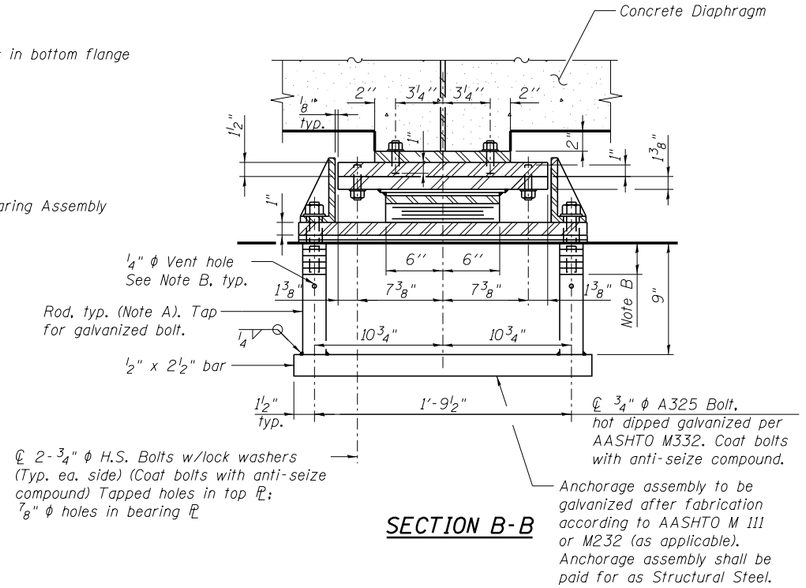

SECTION B-B

TYPE II ELASTOMERIC EXP. BRG. NORTH ABUTMENT

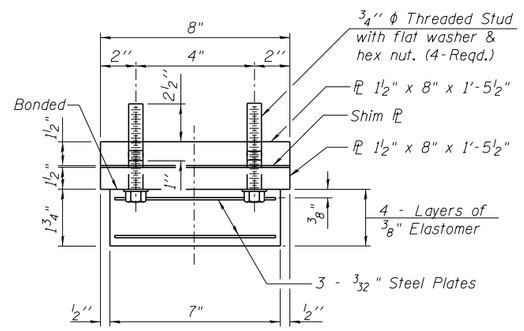

Note:
Shim plates shall not be placed under Bearing Assembly.

BEARING ASSEMBLY

BILL OF MATERIAL

Item	Unit	Total
Elastomeric Bearing Assembly, Type I	Each	1
Elastomeric Bearing Assembly, Type II	Each	1
Anchor Bolts, 3/4"	Each	2

Notes:

Anchor bolts shall be ASTM F1554 all-thread (or an Engineer-approved alternate material) of the grade(s) and diameter(s) specified. The corresponding specified grade of AASHTO M314 anchor bolts may be used in lieu of ASTM F1554.

Anchor bolts for Type I side retainers may be cast in place or installed in holes drilled before or after members are in place.

Anchor bolts for Type II bearings shall be placed in holes drilled in the concrete through holes in the bottom bearing plate after members are in place. Side retainers shall be placed after bolts are installed.

Drilled and set anchor bolts shall be installed according to Article 521.06 of the Standard Specifications.

Side retainers and other steel members required for the elastomeric bearing assembly shall be included in the cost of Elastomeric Bearing Assembly, Type I or Type II.

The 1/8" PTFE sheet shall be bonded directly to the top steel plate with a two-component, medium viscosity epoxy resin, conforming to the requirements of the Federal Specification MMM-A-134, Type I. The bond agent shall be applied on the full area of the contact surfaces.

Bonding of 1/8" PTFE sheet during vulcanizing process will be permitted provided the process and method of adjusting assembly height is approved by the Engineer.

The structural steel plates of the Bearing Assembly shall conform to the requirements of AASHTO M 270 Grade 50.

Two 1/8 in. adjusting shims shall be provided for each bearing in addition to all other plates or shims and placed as shown on bearing details.

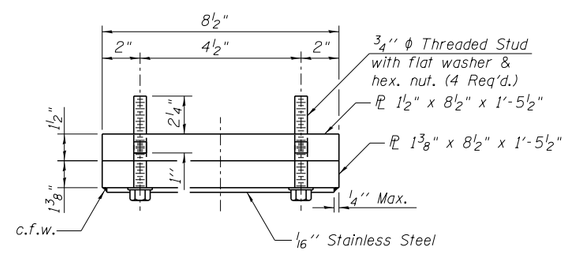

TOP BEARING ASSEMBLY

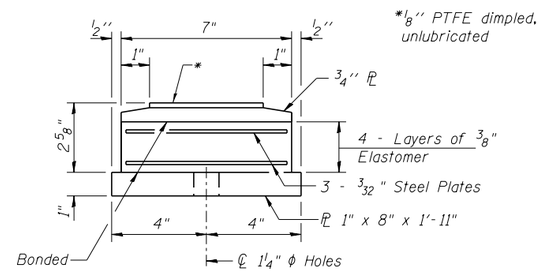

BOTTOM BEARING ASSEMBLY

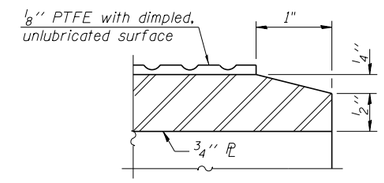

SECTION THRU PTFE

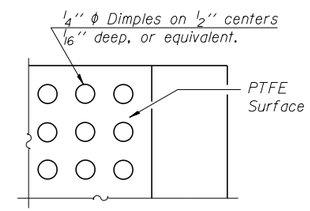

PLAN-PTFE SURFACE

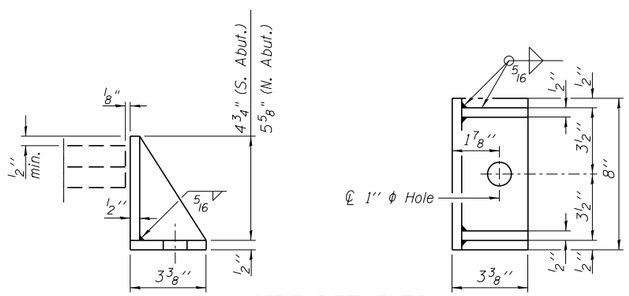

SIDE RETAINER

Equivalent rolled angle with stiffeners will be allowed in lieu of welded plates.

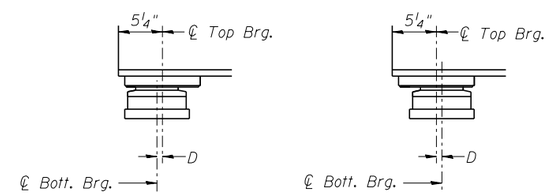

BELOW 50°F.
(Move bott. brg. away from fixed brg.)

ABOVE 50°F.
(Move bott. brg. toward fixed brg.)

SETTING ANCHOR BOLTS AT EXP. BRG.

D=1/8" per each 100' of expansion for every 15° temp. change from the normal temp. of 50°F.

benesch
engineers · scientists · planners
Alfred Benesch & Company
205 North Michigan Avenue, Suite 2400
Chicago, Illinois 60601
312-565-0450
Job No. 10093

FILE NAME = 016-0488-60J16-021-Bearing Details 1 of 2.dgn	USER NAME = jsurber	DESIGNED - CMK	REVISED -
		CHECKED - JAW	REVISED -
	IDOT SCALE =	DRAWN - CMK	REVISED -
	PLOT DATE = 12/20/2013	CHECKED - JAW	REVISED -

STATE OF ILLINOIS
DEPARTMENT OF TRANSPORTATION

BEARING DETAILS (1 OF 2)
STRUCTURE NO. 016-0488

SHEET NO. SH21 OF SH36 SHEETS

F.A.P. RTE.	SECTION	COUNTY	TOTAL SHEETS	SHEET NO.
373	2013-038B-R	COOK	821	759
		CONTRACT NO. 60J16		
		ILLINOIS FED. AID PROJECT		

Y:\chicago\10000S\10093\Eng_Docs_Phase_II\SN_016_0488_0489_1st_Ave_over_ICC_RR\Final\Final 0488\016-0488-60J16-021-Bearing Details 1 of 2.dgn
9:07:36 AM
7/9/2014

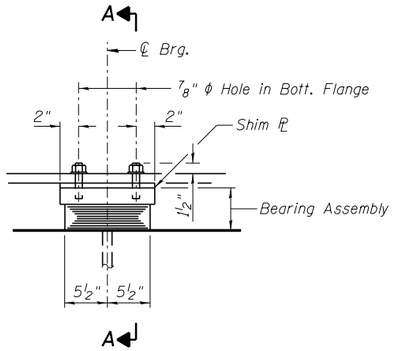

ELEVATION

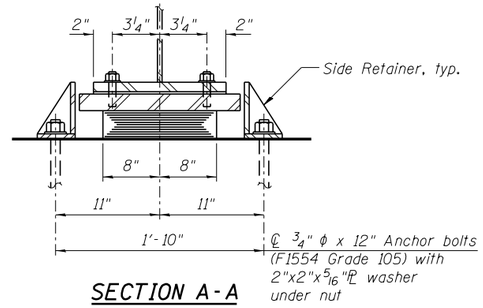

SECTION A-A

TYPE I ELASTOMERIC EXP. BRG. PIER 2

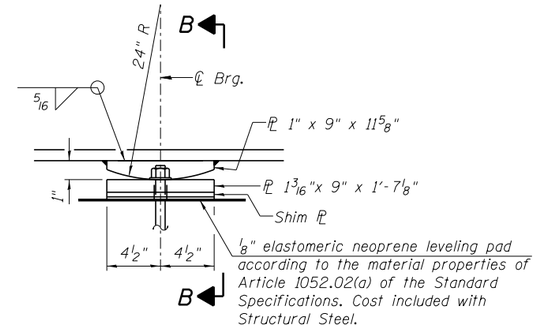

ELEVATION AT PIER

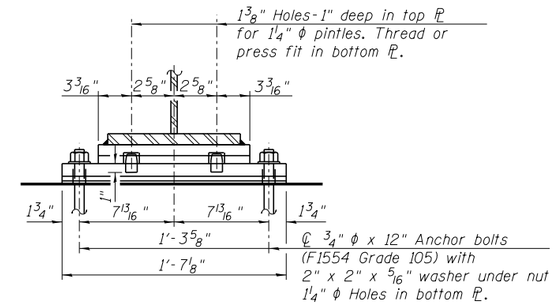

SECTION B-B

FIXED BEARING AT PIER 1

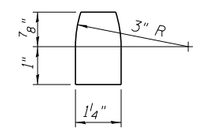

PINTLE

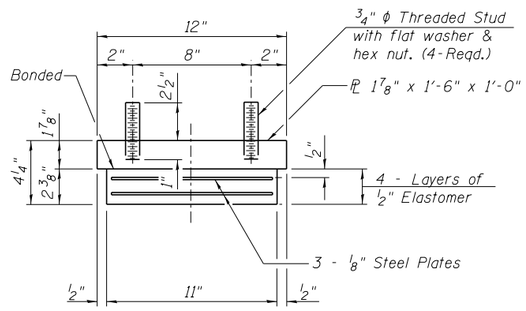

BEARING ASSEMBLY

Note:
Shim plates shall not be placed under Bearing Assembly.

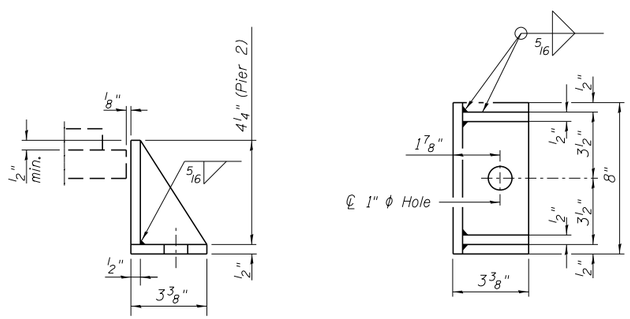

SIDE RETAINER

Equivalent rolled angle with stiffeners will be allowed in lieu of welded plates.

NOTES:

1. Anchor bolts shall be ASTM F1554 all-thread (or an Engineer-approved alternate material) of the grade(s) and diameter(s) specified. The corresponding specified grade of AASHTO M314 anchor bolts may be used in lieu of ASTM F1554.
2. Anchor bolts at fixed bearings may be either cast in place or installed in holes drilled after the supported member is in place.
3. Anchor bolts for side retainers may be cast in place or installed in holes drilled before or after members are in place.
4. Drilled and set anchor bolts shall be installed according to Article 521.06 of the Standard Specifications.
5. Side retainers and other steel members required for the elastomeric bearing assembly shall be included in the cost of Elastomeric Bearing Assembly, Type I.
6. The structural steel plates of the Bearing Assembly and fixed bearing shall conform to the requirements of AASHTO M270 Grade 50.
7. Steel members required for the fixed bearing shall be included in the cost of "Furnishing and Erecting Structural Steel".
8. Two 1/8" adjusting shims shall be provided for each bearing in addition to all other plates or shims and placed as shown on bearing details.

BILL OF MATERIAL

Item	Unit	Total
Elastomeric Bearing Assembly, Type I	Each	1
Anchor Bolts, 3/4"	Each	4

benesch engineers · scientists · planners
Alfred Benesch & Company
205 North Michigan Avenue, Suite 2400
Chicago, Illinois 60601
312-565-0450 Job No. 10093

FILE NAME = 016-0488-60J16-022-Bearing Details 2 of 2.dgn	USER NAME = tjanicke	DESIGNED - CMK	REVISED -
		CHECKED - JAW	REVISED -
PLOT SCALE = 2.00		DRAWN - CMK	REVISED -
PLOT DATE = 12/20/2013		CHECKED - JAW	REVISED -

STATE OF ILLINOIS
DEPARTMENT OF TRANSPORTATION

BEARING DETAILS (2 OF 2)
STRUCTURE NO. 016-0488

SHEET NO. SH22 OF SH36 SHEETS

F.A.P. RTE.	SECTION	COUNTY	TOTAL SHEETS	SHEET NO.
373	2013-038B-R	COOK	821	760
		CONTRACT NO. 60J16		
		ILLINOIS FED. AID PROJECT		

X:\100005\10093\Eng_Docs_Phase_II\SN_016_0488_0489_1st_Ave_over_ICC_RR\Final 0488\016-0488-60J16-022-Bearing Details 2 of 2.dgn 3:02:13 PM 6/23/2014

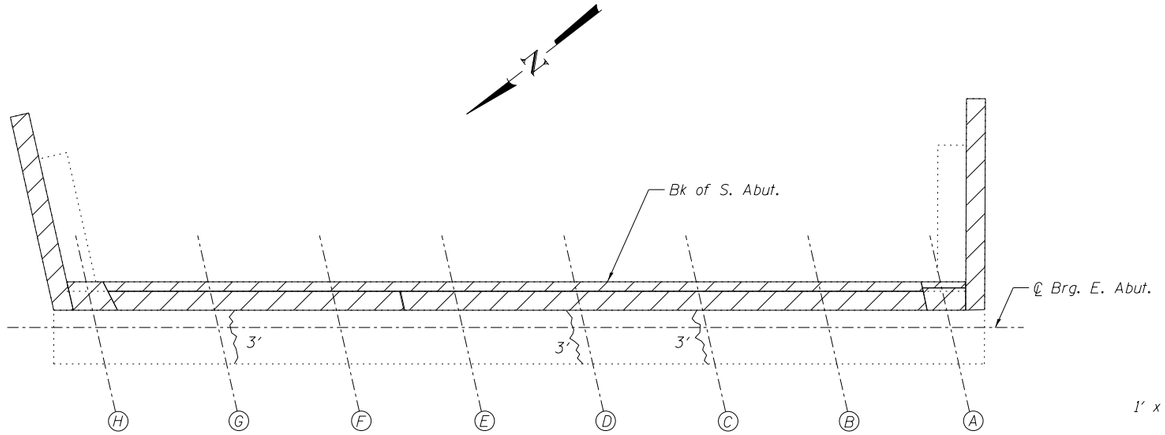

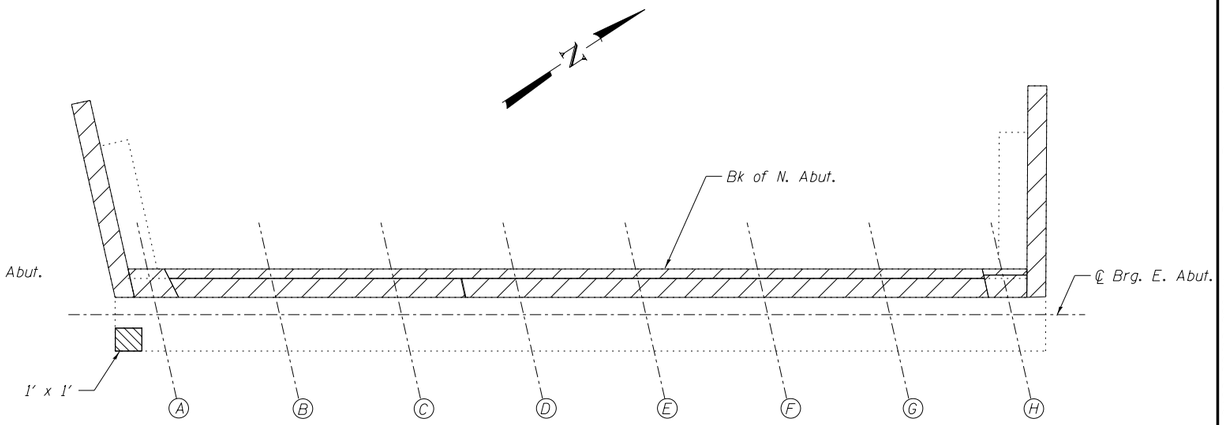

PLAN
(South Abutment)

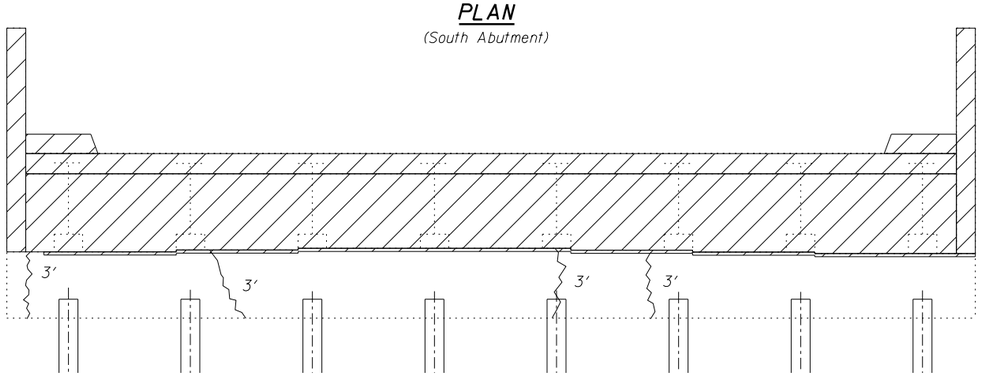

ELEVATION
(South Abutment)

PLAN
(North Abutment)

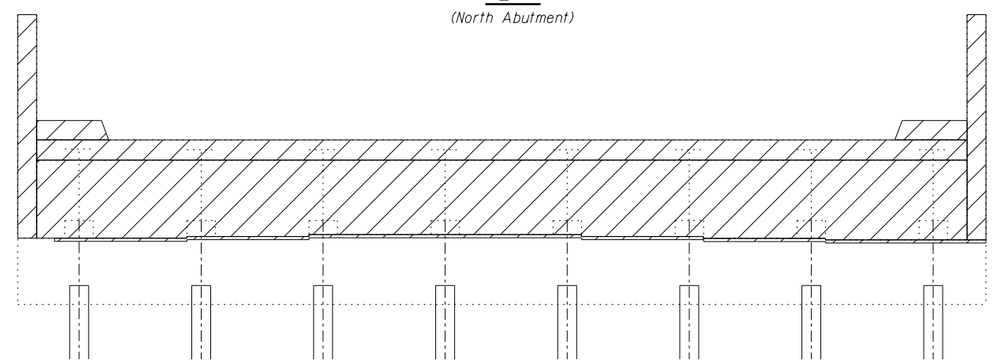

ELEVATION
(North Abutment)

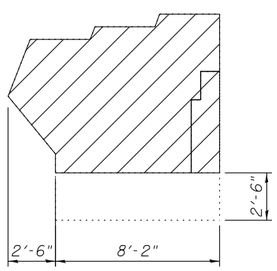

WINGWALL ELEVATION
(South Abutment Wall Shown)
(North Abutment Wall Similar)

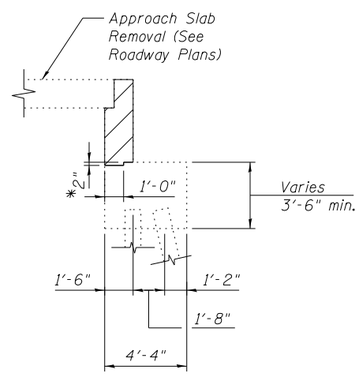

BACKWALL SECTION

*Remove backwall 2" into bridge abutment seat.

BILL OF MATERIAL

ITEM	UNIT	TOTAL
Concrete Removal	Cu. Yd.	36.7
Structural Repair of Concrete (Depth Equal to or Less Than 5 Inches)	Sq. Ft.	1
Epoxy Crack Injection	Foot	21

LEGEND

- Concrete Removal
- Structural Repair of Concrete Area
- Epoxy Crack Injection

NOTE:

Existing vertical reinforcement shall be cut flush with the concrete removal surface. Cost included with "Concrete Removal".

benesch
engineers · scientists · planners
Alfred Benesch & Company
205 North Michigan Avenue, Suite 2400
Chicago, Illinois 60601
312-565-0450 Job No. 10093

FILE NAME = 016-0488-60J16-023-Abutment Repair Details.dgn	USER NAME = jsurber	DESIGNED - CMK	REVISED -
		CHECKED - JAW	REVISED -
	PLOT SCALE =	DRAWN - CMK	REVISED -
	PLOT DATE = 12/20/2013	CHECKED - JAW	REVISED -

STATE OF ILLINOIS
DEPARTMENT OF TRANSPORTATION

ABUTMENT CONCRETE REMOVAL AND REPAIR DETAILS
STRUCTURE NO. 016-0488

SHEET NO. SH23 OF SH36 SHEETS

F.A.P. RTE.	SECTION	COUNTY	TOTAL SHEETS	SHEET NO.
373	2013-038B-R	COOK	821	761
		CONTRACT NO. 60J16		
		ILLINOIS FED. AID PROJECT		

Y:\chicago\10000S\10093\Eng_Docs_Phase_II\SN_016_0488_0489_1st_Ave_over_ICC_RR\Final\Final 0488\016-0488-60J16-023-Abutment Repair Details.dgn
8:27:10 AM 7/16/2014

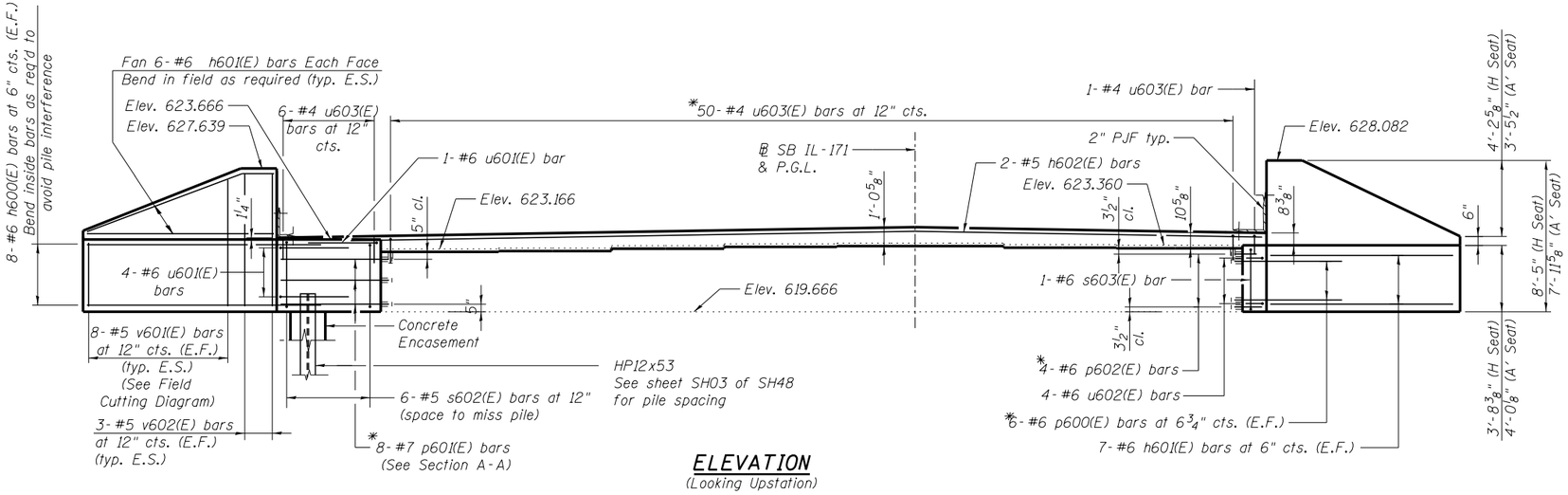

ELEVATION

(Looking Upstation)

*Drill and grout bars acording to Article 584 of the Standard Specifictions. See Embedment Depth table for hole depth. Cost to be included in "Concrete Structures".

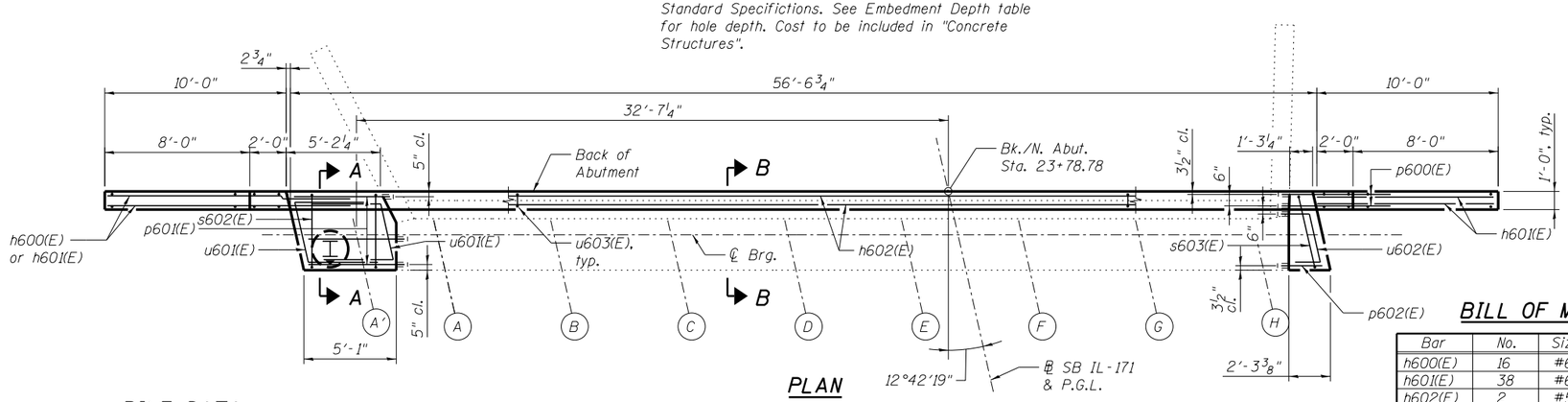

PLAN

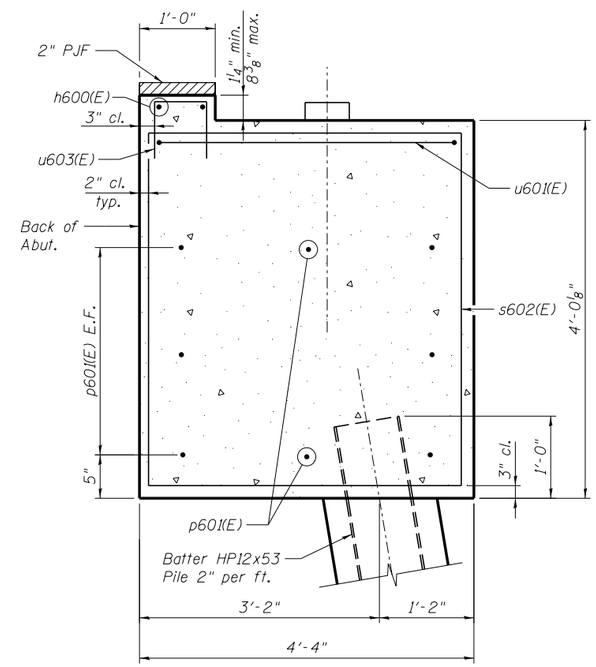

SECTION A-A

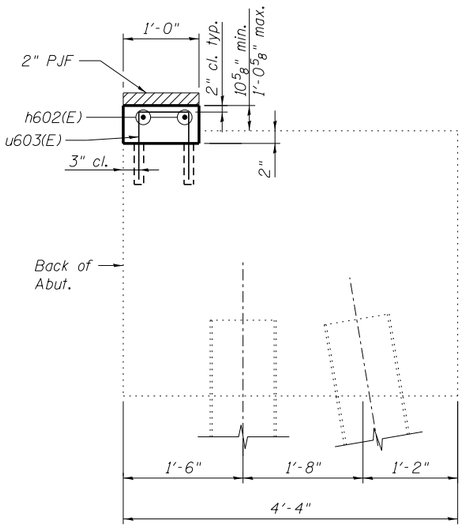

SECTION B-B

PILE DATA

Type: HP12x53 with Pile Shoes
Nominal Required Bearing: 211 kips
Allowable Resistance Available: 70 kips
Est. Length: 40'
No. Production Piles: 0
No. Test Piles: 1

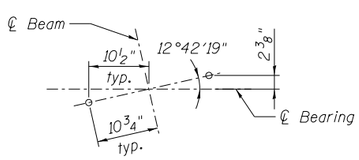

ANCHOR BOLT DETAIL

EMBEDMENT DEPTH

BAR SIZE	EMBEDMENT
#4	6"
#6	10"
#7	12"

BILL OF MATERIAL

Bar	No.	Size	Length	Shape
h600(E)	16	#6	11'-6"	
h601(E)	38	#6	9'-8"	
h602(E)	2	#5	56'-2"	
p600(E)	14	#6	6'-0"	
p601(E)	8	#7	5'-10"	
p602(E)	4	#6	2'-10"	
s602(E)	6	#5	16'-1"	
s603(E)	1	#5	15'-5"	
u601(E)	5	#6	11'-9"	
u602(E)	4	#6	6'-11"	
u603(E)	57	#4	3'-7"	
v601(E)	16	#5	10'-5"	
v602(E)	12	#5	7'-8"	
Structure Excavation			Cu. Yd.	102
Concrete Structures			Cu. Yd.	10.7
Reinforcement Bars, Epoxy Coated			Pound	1,840
Test Pile Steel HP12x53			Each	1
Pile Shoes			Each	1
Geocomposite Wall Drain			Sq. Yd.	69
Concrete Encasement			Cu. Yd.	0.35
Granular Backfill for Structures			Cu. Yd.	102
Cleaning Bridge Seats			Sq. Ft.	98
Pipe Underdrains for Structures 4"			Foot	57

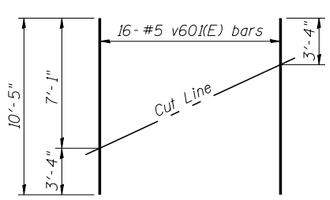

FIELD CUTTING DIAGRAM

Order v601(E) full length. Cut as shown and use remainder of bars in opposite face.

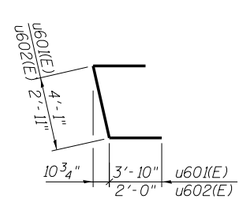

BARS u601(E) & u602(E)

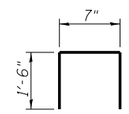

BARS u603(E)

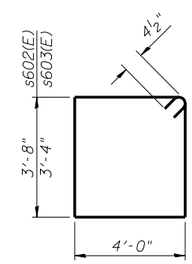

BAR s602(E) & s603(E)

NOTES:

1. E.F. denotes Each Face, E.S. denotes Each Side.
2. For details of piles, see sheet SH30.
3. For concrete encasement details, see sheet SH30.

benesch engineers · scientists · planners
Alfred Benesch & Company
205 North Michigan Avenue, Suite 2400
Chicago, Illinois 60601
312-565-0450 Job No. 10093

FILE NAME = 016-0488-60J16-024-N Abutment Widening Details.dgn	USER NAME = jsurber	DESIGNED - CMK	REVISED -
		CHECKED - JAW	REVISED -
	FILE SIZE =	DRAWN - CMK	REVISED -
	PLOT DATE = 12/20/2013	CHECKED - JAW	REVISED -

STATE OF ILLINOIS
DEPARTMENT OF TRANSPORTATION

NORTH ABUTMENT WIDENING DETAILS
STRUCTURE NO. 016-0488

SHEET NO. SH24 OF SH36 SHEETS

F.A.P. RTE.	SECTION	COUNTY	TOTAL SHEETS	SHEET NO.
373	2013-038B-R	COOK	821	762
		CONTRACT NO. 60J16		
		ILLINOIS FED. AID PROJECT		

Y:\chicago\10000S\10093\Eng_Docs_Phase_II\SN_016_0488_0489_1st_Ave_over_ICC_RR\Final\Final 0488\016-0488-60J16-024-N Abutment Widening Details.dgn
7/16/2014 9:53:53 AM

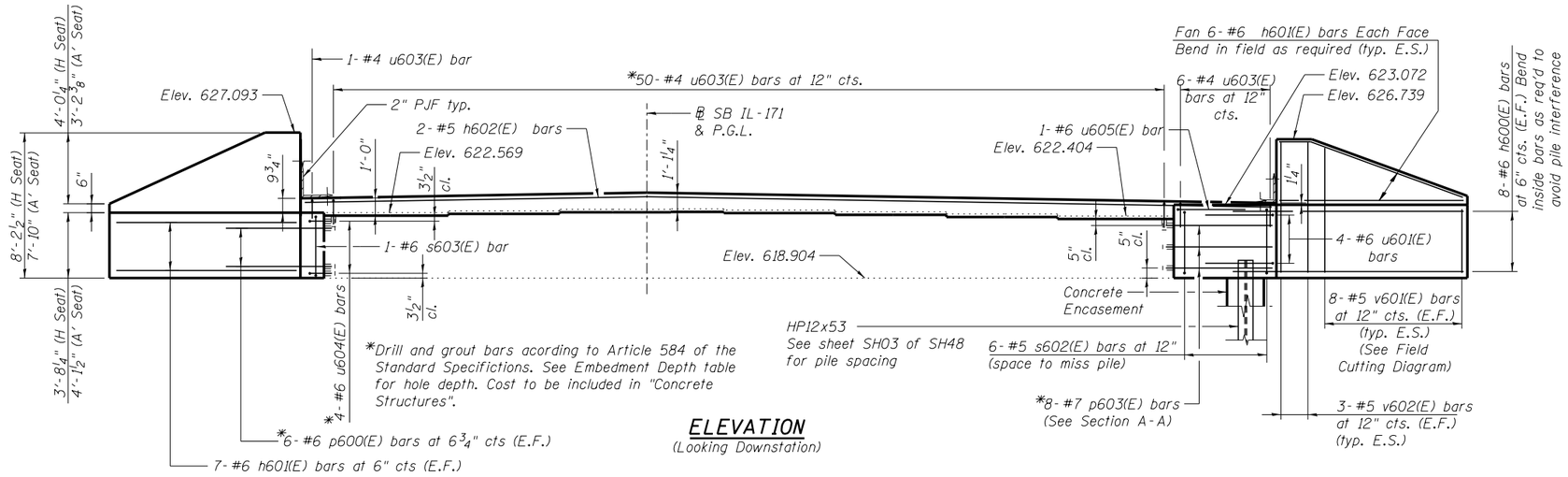

ELEVATION
(Looking Downstation)

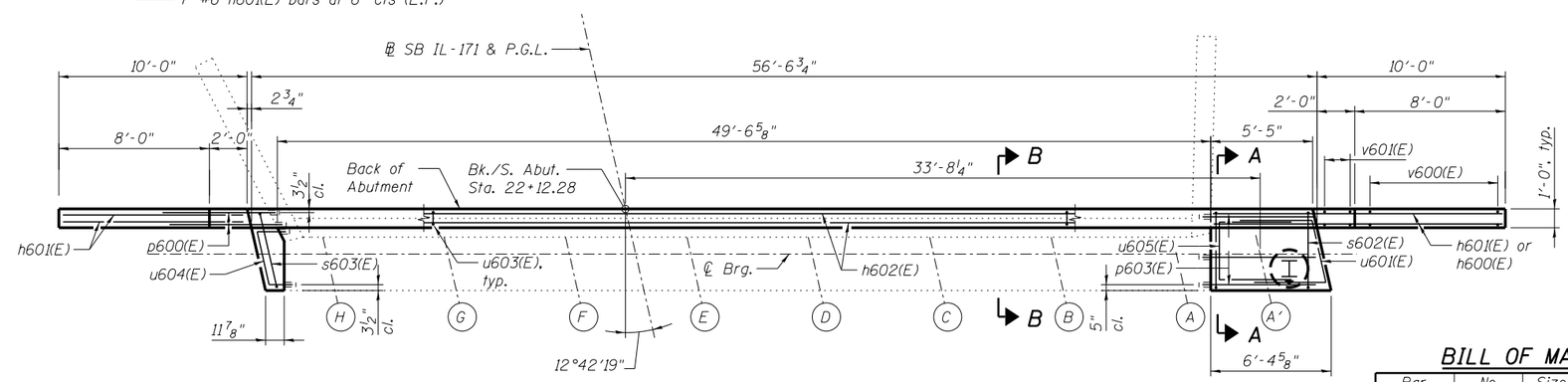

PLAN

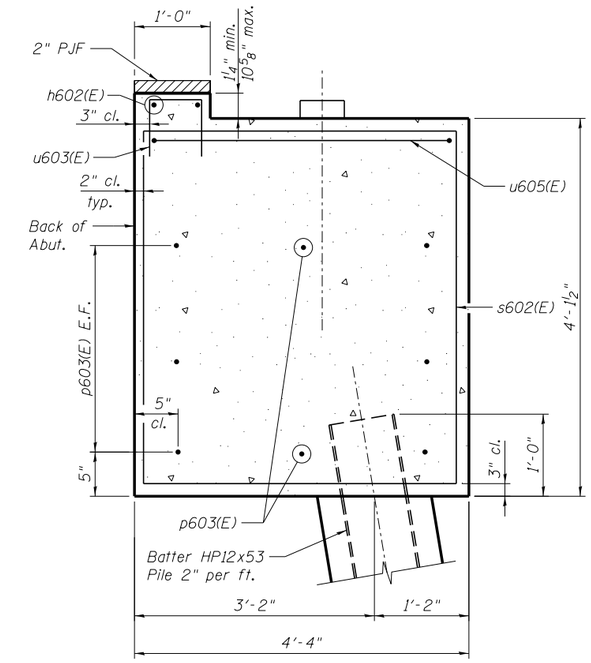

SECTION A-A

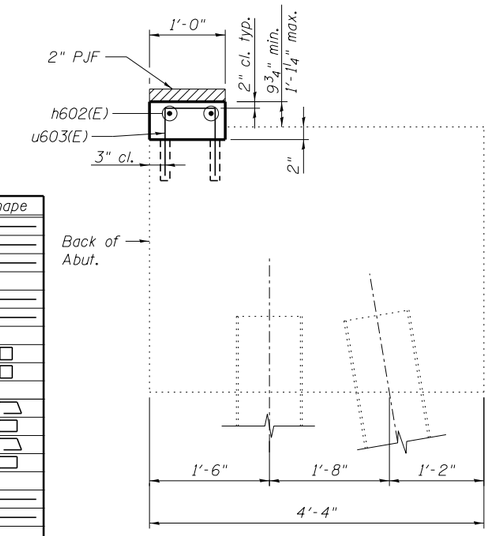

SECTION B-B

PILE DATA

Type: HP12x53 with Pile Shoes
Nominal Required Bearing: 205 kips
Allowable Resistance Available: 68 kips
Est. Length: 45'
No. Production Piles: 0
No. Test Piles: 1

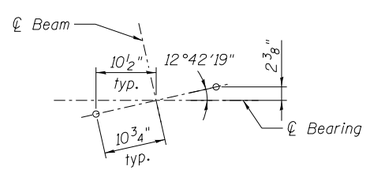

ANCHOR BOLT DETAIL

EMBEDMENT DEPTH

BAR SIZE	EMBEDMENT
#4	6"
#6	10"
#7	12"

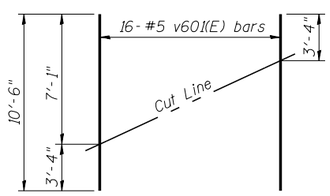

FIELD CUTTING DIAGRAM

Order v601(E) full length. Cut as shown and use remainder of bars in opposite face.

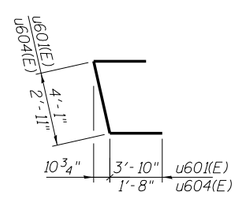

BARS u601(E) & u604(E)

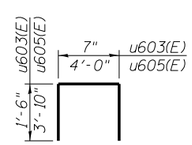

BARS u603(E) & u605(E)

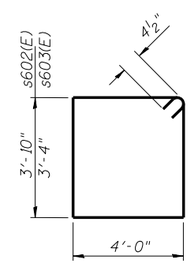

BARS s602(E) & s603(E)

BILL OF MATERIAL

Bar	No.	Size	Length	Shape
h600(E)	16	#6	15'-0"	
h601(E)	38	#6	9'-8"	
h602(E)	2	#5	56'-2"	
p600(E)	12	#6	6'-0"	
p603(E)	8	#7	7'-0"	
s602(E)	6	#5	16'-1"	
s603(E)	1	#5	15'-5"	
u601(E)	4	#6	11'-9"	
u603(E)	57	#4	3'-7"	
u604(E)	4	#6	6'-3"	
u605(E)	1	#6	11'-8"	
v601(E)	16	#5	10'-5"	
v602(E)	12	#5	7'-8"	
Structure Excavation			Cu. Yd.	101
Concrete Structures			Cu. Yd.	10.7
Reinforcement Bars, Epoxy Coated			Pound	1,910
Test Pile Steel HP12x53			Each	1
Pile Shoes			Each	1
Geocomposite Wall Drain			Sq. Yd.	68
Concrete Encasement			Cu. Yd.	0.35
Granular Backfill for Structures			Cu. Yd.	101
Cleaning Bridge Seats			Sq. Ft.	98
Pipe Underdrains for Structures 4"			Foot	57

NOTES:

1. E.F. denotes Each Face, E.S. denotes Each Side.
2. For details of piles, see sheet SH30.
3. For concrete encasement details, see sheet SH30.

benesch
engineers · scientists · planners
Alfred Benesch & Company
205 North Michigan Avenue, Suite 2400
Chicago, Illinois 60601
312-565-0450
Job No. 10093

FILE NAME = 016-0488-60J16-025-S Abutment Widening Details.dgn	USER NAME = jsurber	DESIGNED - CMK	REVISED -
		CHECKED - JAW	REVISED -
	FILE SIZE =	DRAWN - CMK	REVISED -
	PLOT DATE = 12/20/2013	CHECKED - JAW	REVISED -

STATE OF ILLINOIS
DEPARTMENT OF TRANSPORTATION

SOUTH ABUTMENT WIDENING DETAILS
STRUCTURE NO. 016-0488

SHEET NO. SH25 OF SH36 SHEETS

F.A.P. RTE.	SECTION	COUNTY	TOTAL SHEETS	SHEET NO.
373	2013-038B-R	COOK	821	763
		CONTRACT NO. 60J16		
		ILLINOIS FED. AID PROJECT		

Y:\chicago\100005\10093\Eng_Docs_Phase_II\SN_016_0488_0489_1st_Ave_over_ICC_RR\Final 0488\016-0488-60J16-025-S Abutment Widening Details.dgn
9:53:54 AM
7/16/2014

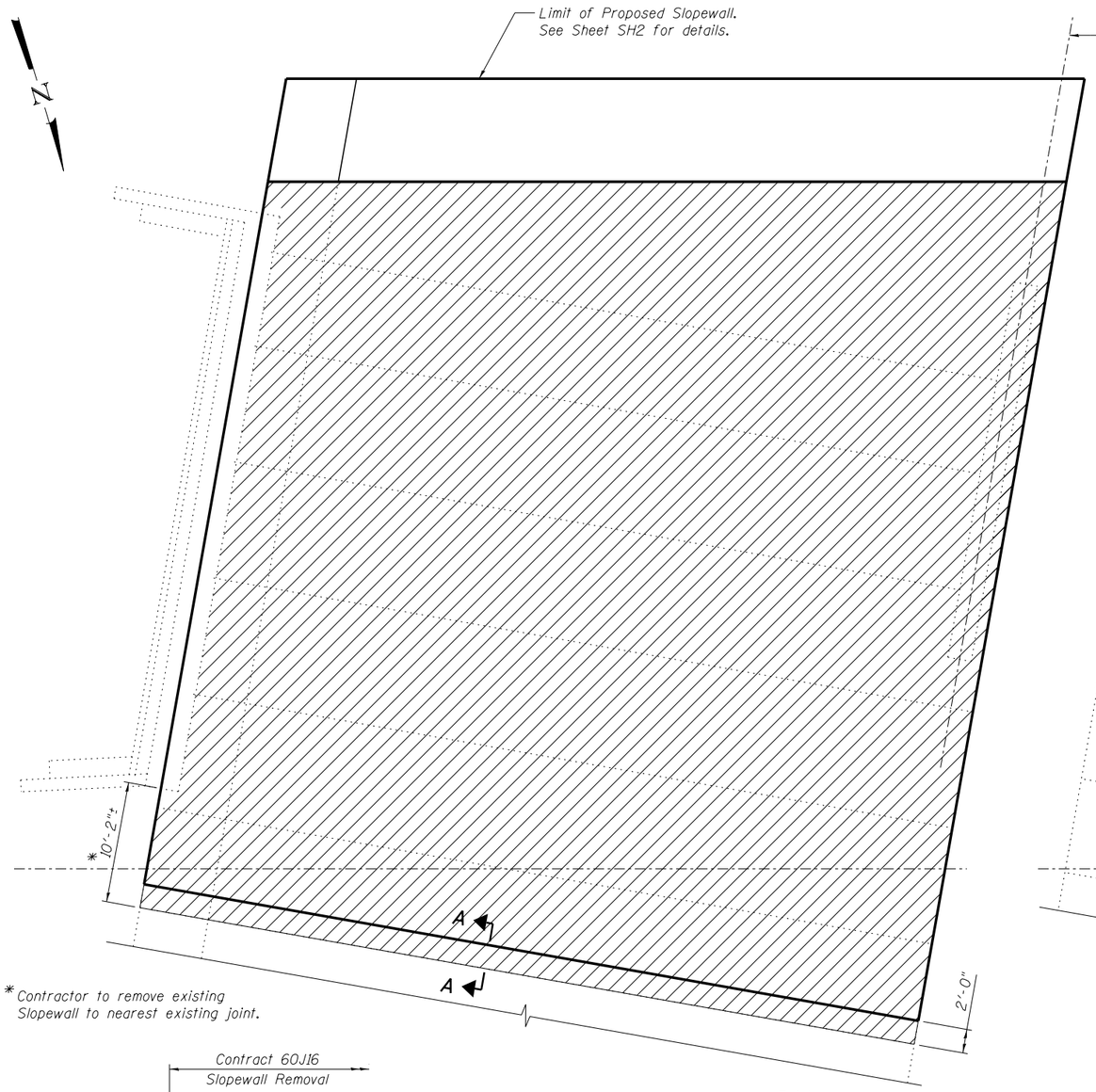

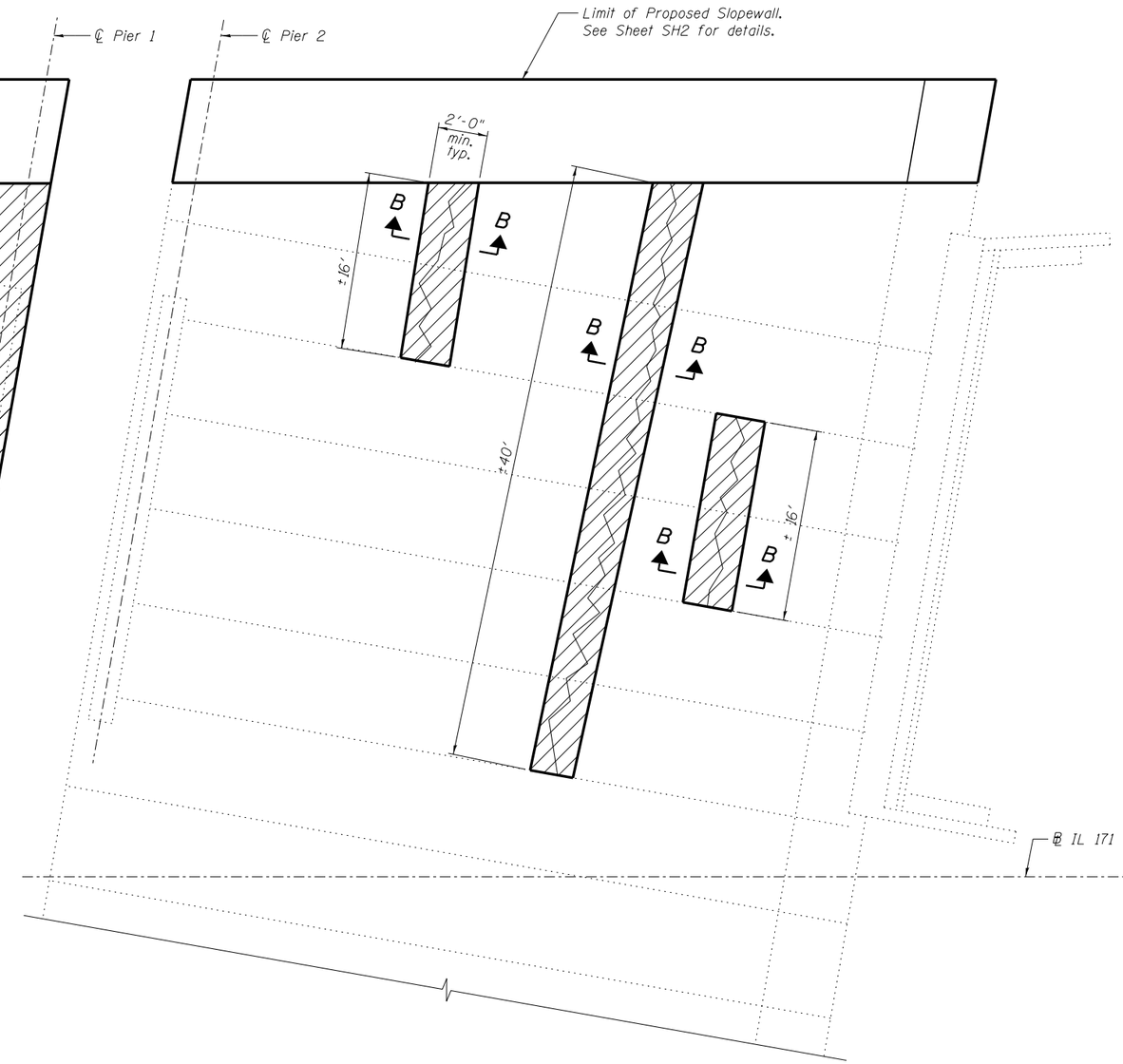

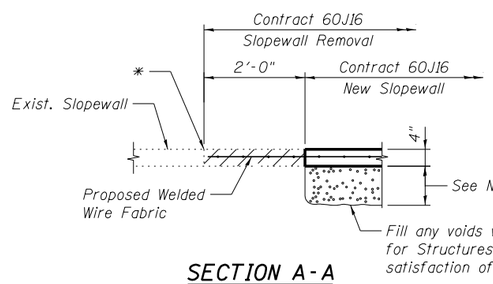

SECTION A-A

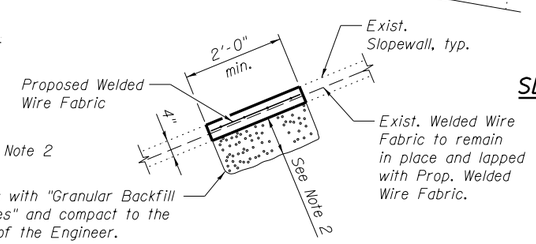

SECTION B-B

SLOPEWALLS

LEGEND

Slopewall to be Removed and Replaced

Crack

BILL OF MATERIAL

ITEM	UNIT	TOTAL
Slope Wall Removal	Sq. Yd.	493
Granular Backfill for Structures	Cu. Yd.	112
Slope Wall 4 Inch	Sq. Yd.	606

NOTES:

1. Slope wall shall be reinforced with welded wire fabric, 6 in. x 6 in. W4.0 x W4.0, weighing 58 lbs per 100 sq. ft.
2. Any voids found under the slopewall shall be filled with Granular Backfill and compacted to the satisfaction of the Engineer. Quantity of Granular Backfill based on an estimate assuming an average of 2' of required fill under all damaged slopewall areas, and 6" required fill under remaining removal.

benesch
engineers · scientists · planners
Alfred Benesch & Company
205 North Michigan Avenue, Suite 2400
Chicago, Illinois 60601
312-565-0450 Job No. 10093

FILE NAME = 016-0488-60J16-026-Slopewall Repair Details.dgn	USER NAME = tjanicke	DESIGNED - CMK	REVISED -
		CHECKED - JAW	REVISED -
	PLOT SCALE = 1.000	DRAWN - CMK	REVISED -
	PLOT DATE = 12/20/2013	CHECKED - JAW	REVISED -

STATE OF ILLINOIS
DEPARTMENT OF TRANSPORTATION

SLOPEWALL REPAIR DETAILS
STRUCTURE NO. 016-0488

SHEET NO. SH26 OF SH36 SHEETS

F.A.P. RTE.	SECTION	COUNTY	TOTAL SHEETS	SHEET NO.
373	2013-038B-R	COOK	821	764
		CONTRACT NO. 60J16		
		ILLINOIS FED. AID PROJECT		

X:\100005\10093\Eng_Docs_Phase_II\SN_016_0488_0489_1st_Ave_over_ICC_RR\Final\Final 0488\016-0488-60J16-026-Slopewall Repair Details.dgn
3:02:19 PM
6/23/2014

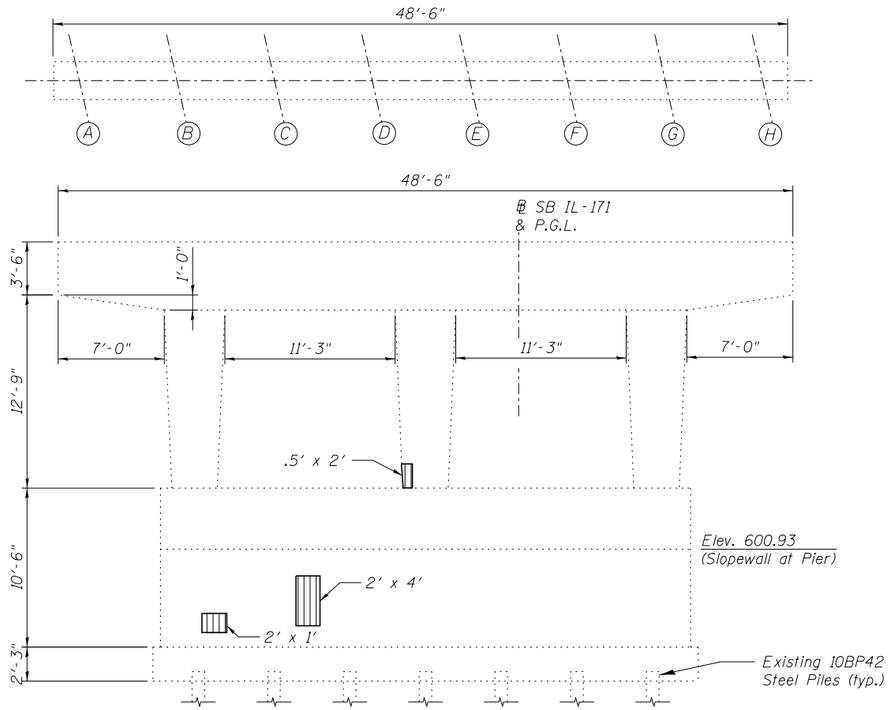

PIER 1
(Looking West)

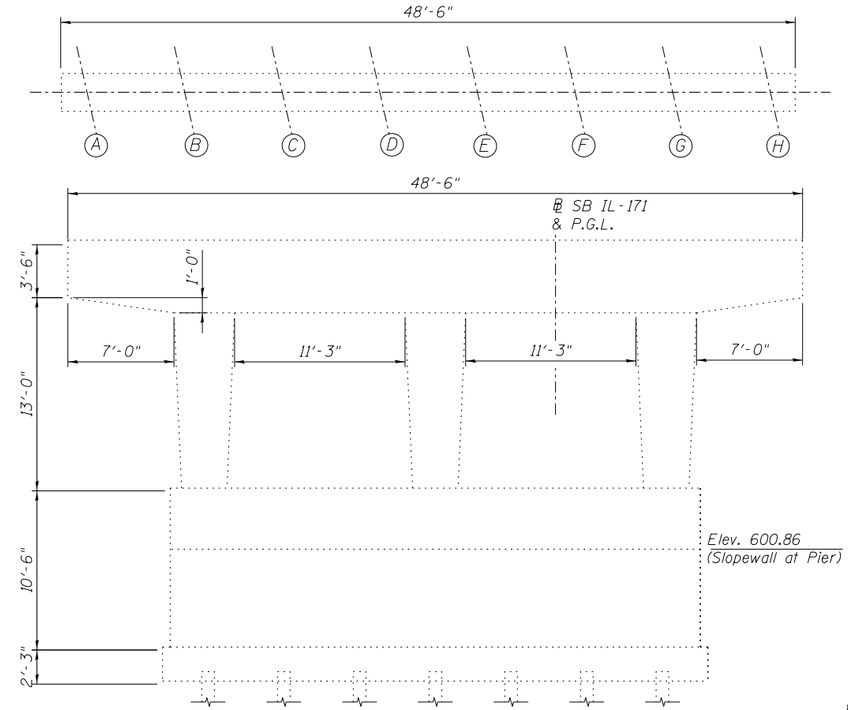

PIER 2
(Looking West)

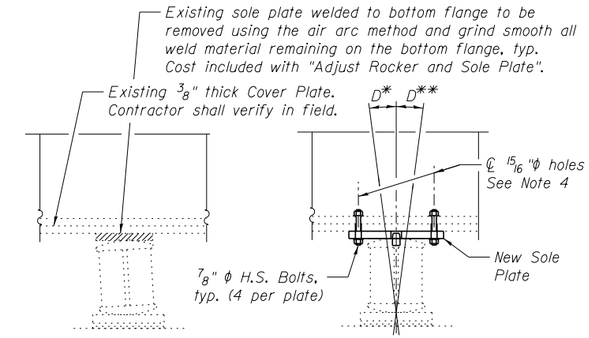

REPOSITION EXISTING BEARINGS AT PIER 2
8 Required

D* = 1/8" per each 100' of expansion for every 15° rise above the normal temp of 50° F.

D** = 1/8" per each 100' of expansion for every 15° fall below the normal temp of 50° F.

NOTES:

1. Jacking shall not commence until the deck has been removed entirely.
2. The service steel dead load reaction for each bearing location at Pier 2 is 8.01 kips. Min. Jack capacity = 12 kips.
3. For jacking and cribbing and other requirements, see special provision for "Adjust Rocker and Sole Plate".
4. Field drill holes in existing bottom flange using new sole plate as a template. Cost of field drilling included with "Adjust Rocker and Sole Plate".

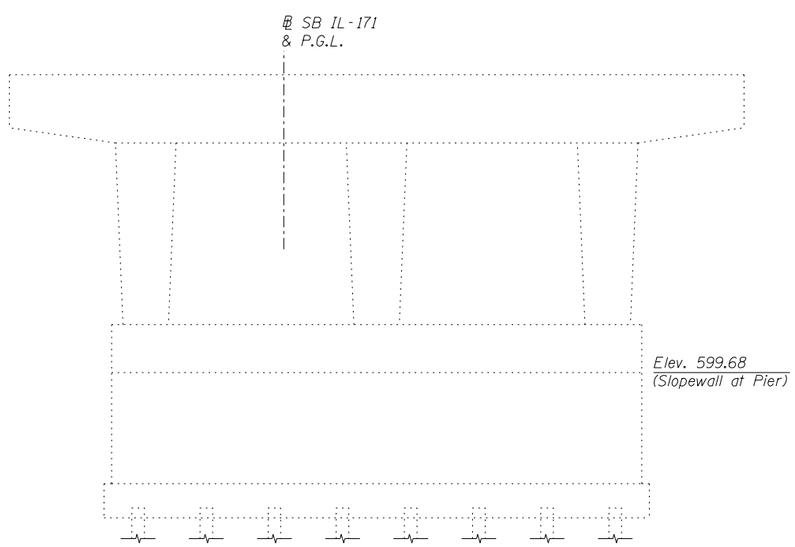

PIER 1
(Looking East)

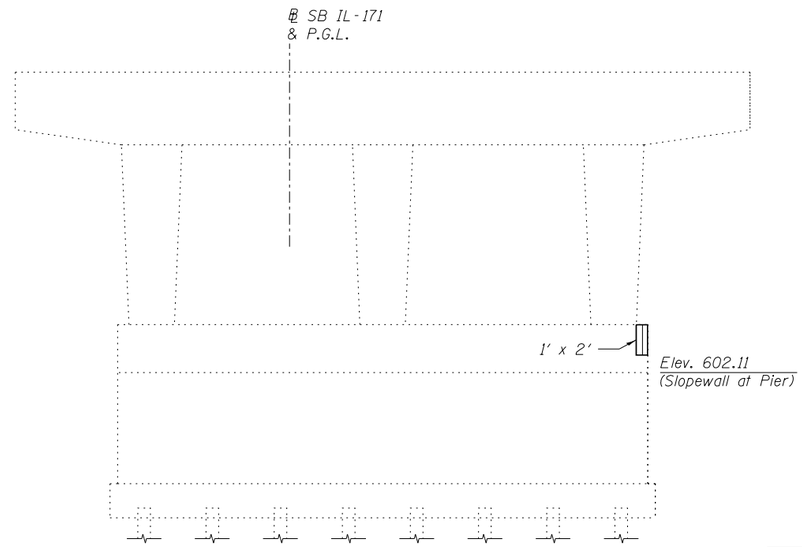

PIER 2
(Looking East)

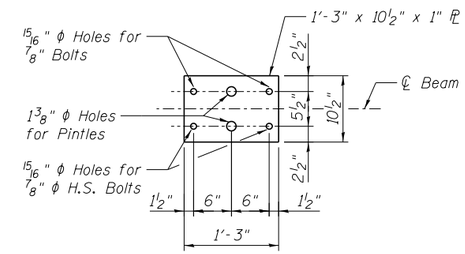

NEW SOLE PLATE

Shop paint with inorganinc zinc primer per Section 506 of the Standard Specifications. Cost included with Adjust Rocker and Sole Plate

BILL OF MATERIAL

ITEM	UNIT	TOTAL
Structural Repair of Concrete (Depth equal to or less than 5")	Sq. Ft.	13
Adjust Rocker and Sole Plate	Each	8

Structural Repair of Concrete Area

benesch
engineers · scientists · planners

Alfred Benesch & Company
205 North Michigan Avenue, Suite 2400
Chicago, Illinois 60601
312-565-0450 Job No. 10093

FILE NAME =	USER NAME = jsurber	DESIGNED - CMK	REVISED -
		CHECKED - JAW	REVISED -
016-0488-60J16-027-Pier Repair Details.dgn	PLOT SCALE =	DRAWN - CMK	REVISED -
	PLOT DATE = 12/20/2013	CHECKED - JAW	REVISED -

STATE OF ILLINOIS
DEPARTMENT OF TRANSPORTATION

PIER CONCRETE REPAIR DETAILS
STRUCTURE NO. 016-0488

SHEET NO. SH27 OF SH36 SHEETS

F.A.P. RTE.	SECTION	COUNTY	TOTAL SHEETS	SHEET NO.
373	2013-038B-R	COOK	821	765
		CONTRACT NO. 60J16		
		ILLINOIS FED. AID PROJECT		

Y:\chicago\10000S\10093\Eng_Docs_Phase_II\SN_016_0488_0489_1st_Ave_over_ICC_RR\Final 0488\016-0488-60J16-027-Pier Repair Details.dgn
9:07:41 AM
7/9/2014

Notes:
Space reinforcement in cap to miss anchor bolts.
Pour steps monolithically with cap.
For details of piles, see sheet SH30 of SH48.

PILE DATA

Type: HP12x53 with Pile Shoes
Nominal Required Bearing: 134 kips
Allowable Resistance Available: 45 kips
Est. Length: 35'
No. Production Piles: 4
No. Test Piles: 1

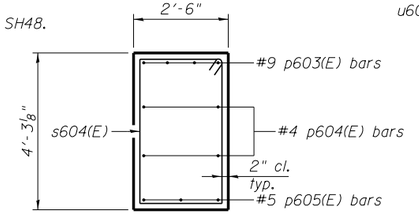

SECTION C-C

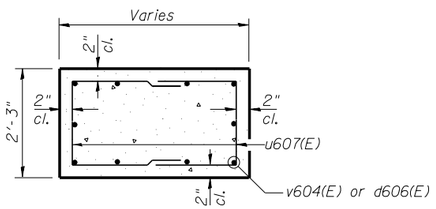

SECTION B-B

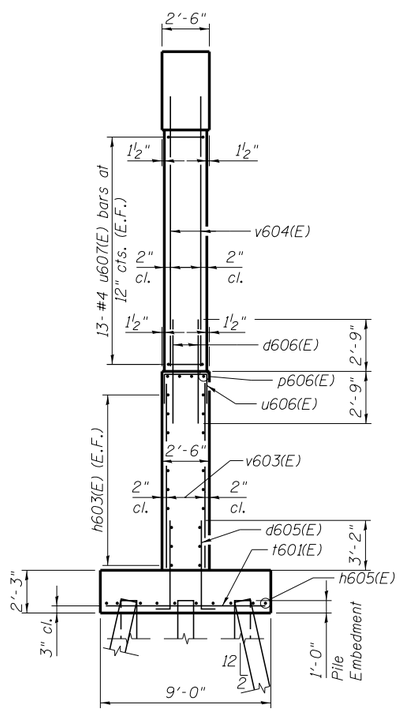

SECTION A-A

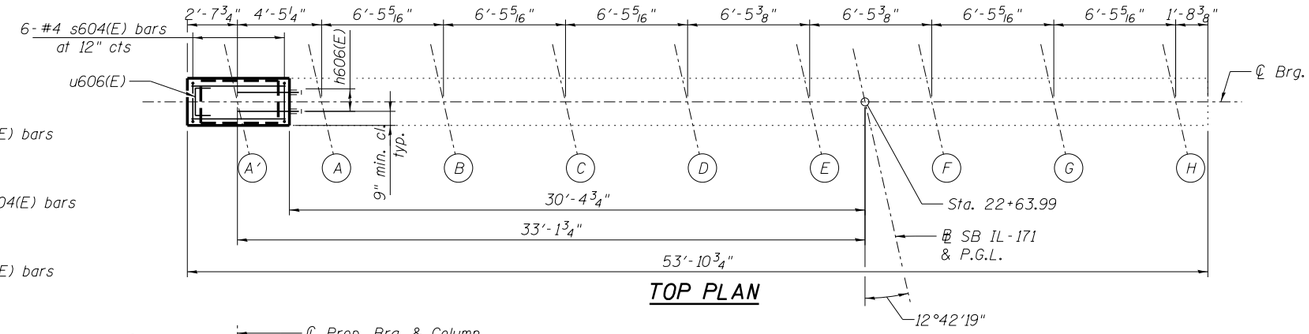

TOP PLAN

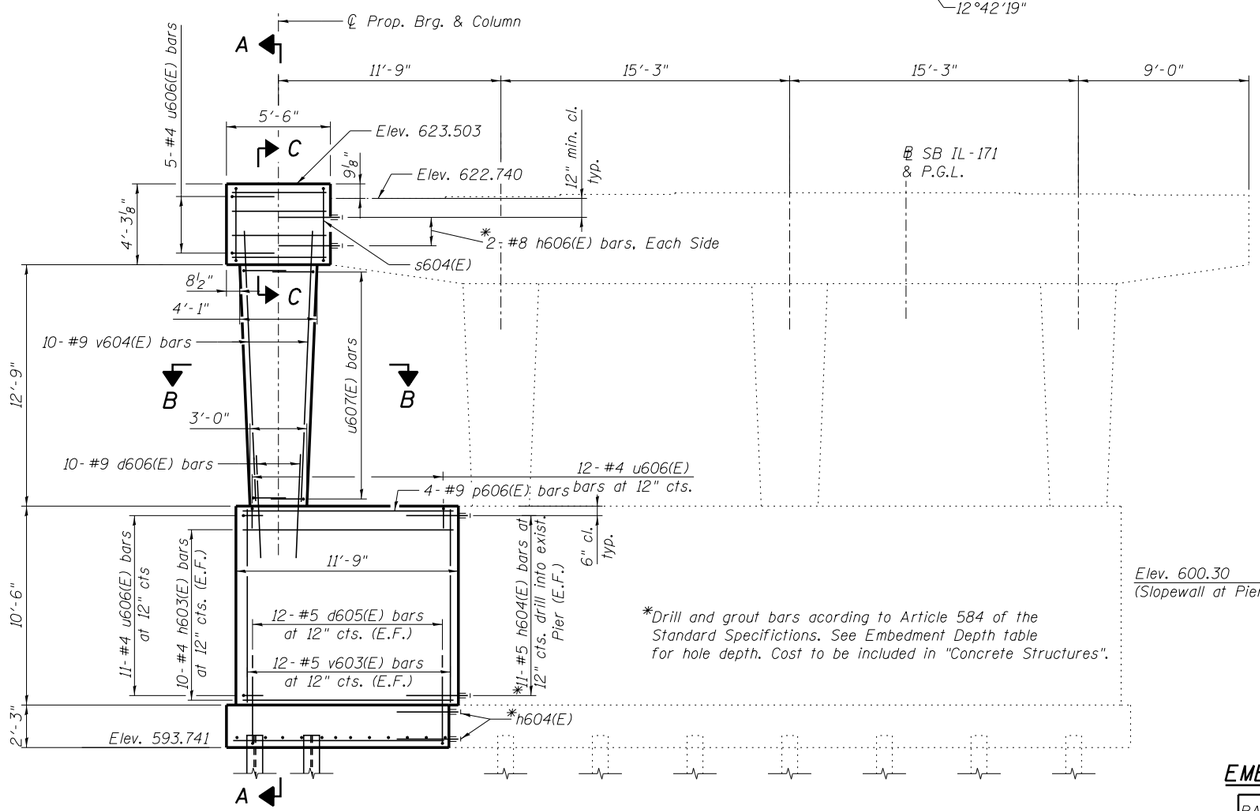

*Drill and grout bars acording to Article 584 of the Standard Specifictions. See Embedment Depth table for hole depth. Cost to be included in "Concrete Structures".

ELEVATION
(Looking Upstation)

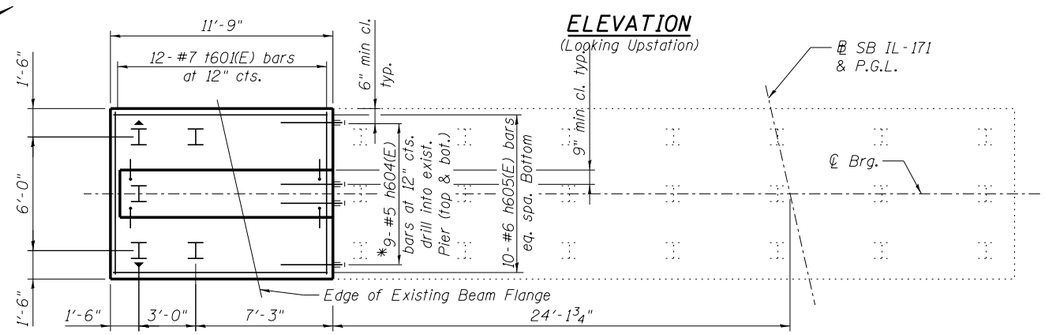

FOOTING PLAN

BILL OF MATERIAL

Bar	No.	Size	Length	Shape
d605(E)	24	#5	5'-11"	
d606(E)	10	#9	5'-6"	
h603(E)	20	#4	11'-5"	
h604(E)	40	#5	3'-3"	
h605(E)	10	#6	11'-5"	
h606(E)	6	#8	4'-0"	
p603(E)	4	#9	5'-2"	
p604(E)	4	#4	5'-2"	
p605(E)	3	#5	5'-2"	
p606(E)	4	#9	11'-5"	
s604(E)	6	#4	12'-9"	
t601(E)	12	#7	8'-8"	
u606(E)	6	#4	4'-2"	
u607(E)	26	#4	6'-7"	
v603(E)	24	#5	10'-2"	
v604(E)	10	#9	15'-9"	
Structure Excavation			Cu. Yd.	47
Concrete Structures			Cu. Yd.	26.1
Reinforcement Bars, Epoxy Coated			Pound	2,300
Furnishing Steel Piles HP12x53			Foot	140
Driving Piles			Foot	140
Test Pile Steel HP12x53			Each	1
Pile Shoes			Each	5
Clean Bridge Seats			Sq. Ft.	122

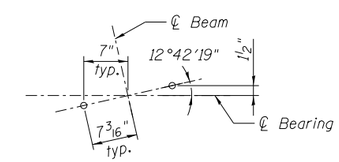

ANCHOR BOLT DETAIL

EMBEDMENT DEPTH

BAR SIZE	EMBEDMENT
#5	8"
#8	12"

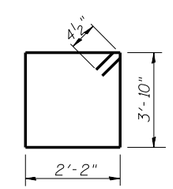

BAR s604(E)

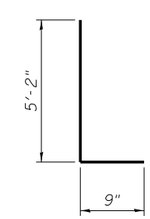

BAR d605(E)

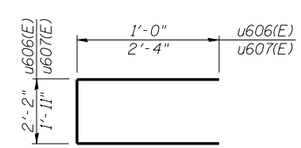

BARS u606(E) & u607(E)

benesch
engineers · scientists · planners
Alfred Benesch & Company
205 North Michigan Avenue, Suite 2400
Chicago, Illinois 60601
312-565-0450 Job No. 10093

FILE NAME = 016-0488-60J16-028-Pier 1 Widening Details.dgn	USER NAME = jsurber	DESIGNED - CMK	REVISED -
		CHECKED - JAW	REVISED -
	PLOT SCALE =	DRAWN - CMK	REVISED -
	PLOT DATE = 12/20/2013	CHECKED - JAW	REVISED -

STATE OF ILLINOIS
DEPARTMENT OF TRANSPORTATION

PIER 1 WIDENING DETAILS
STRUCTURE NO. 016-0488
SHEET NO. SH28 OF SH36 SHEETS

F.A.P. RTE.	SECTION	COUNTY	TOTAL SHEETS	SHEET NO.
373	2013-038B-R	COOK	821	766
		CONTRACT NO. 60J16		
		ILLINOIS FED. AID PROJECT		

7/16/2014 8:27:14 AM Y:\chicago\10000S\10093\Eng_Docs_Phase_II\SN_016_0488_0489_1st_Ave_over_ICC_RR\Final 0488\016-0488-60J16-028-Pier 1 Widening Details.dgn

Notes:
Space reinforcement in cap to miss anchor bolts.
Pour steps monolithically with cap.
For details of piles, see sheet SH30 of SH48.

PILE DATA

Type: HP12x53 with Pile Shoes
Nominal Required Bearing: 189 kips
Allowable Resistance Available: 63 kips
Est. Length: 30'
No. Production Piles: 3
No. Test Piles: 1

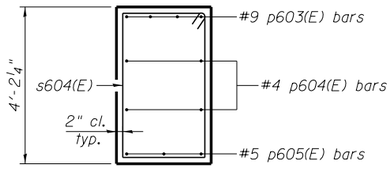

SECTION C-C

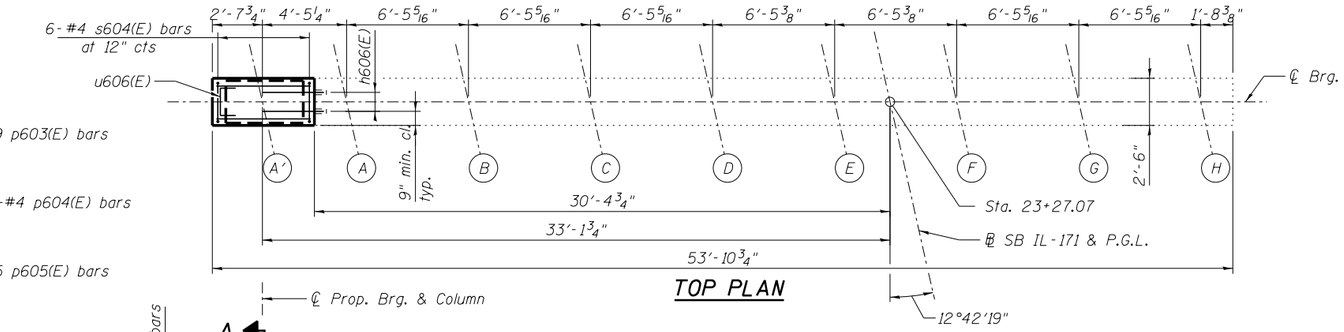

TOP PLAN

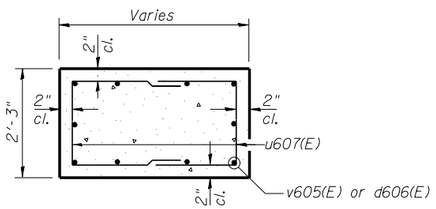

SECTION B-B

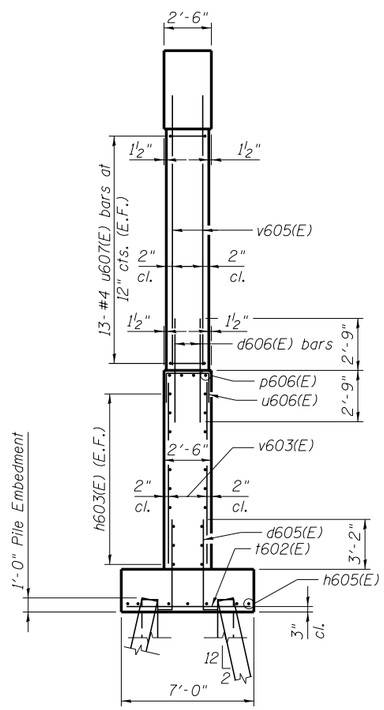

SECTION A-A

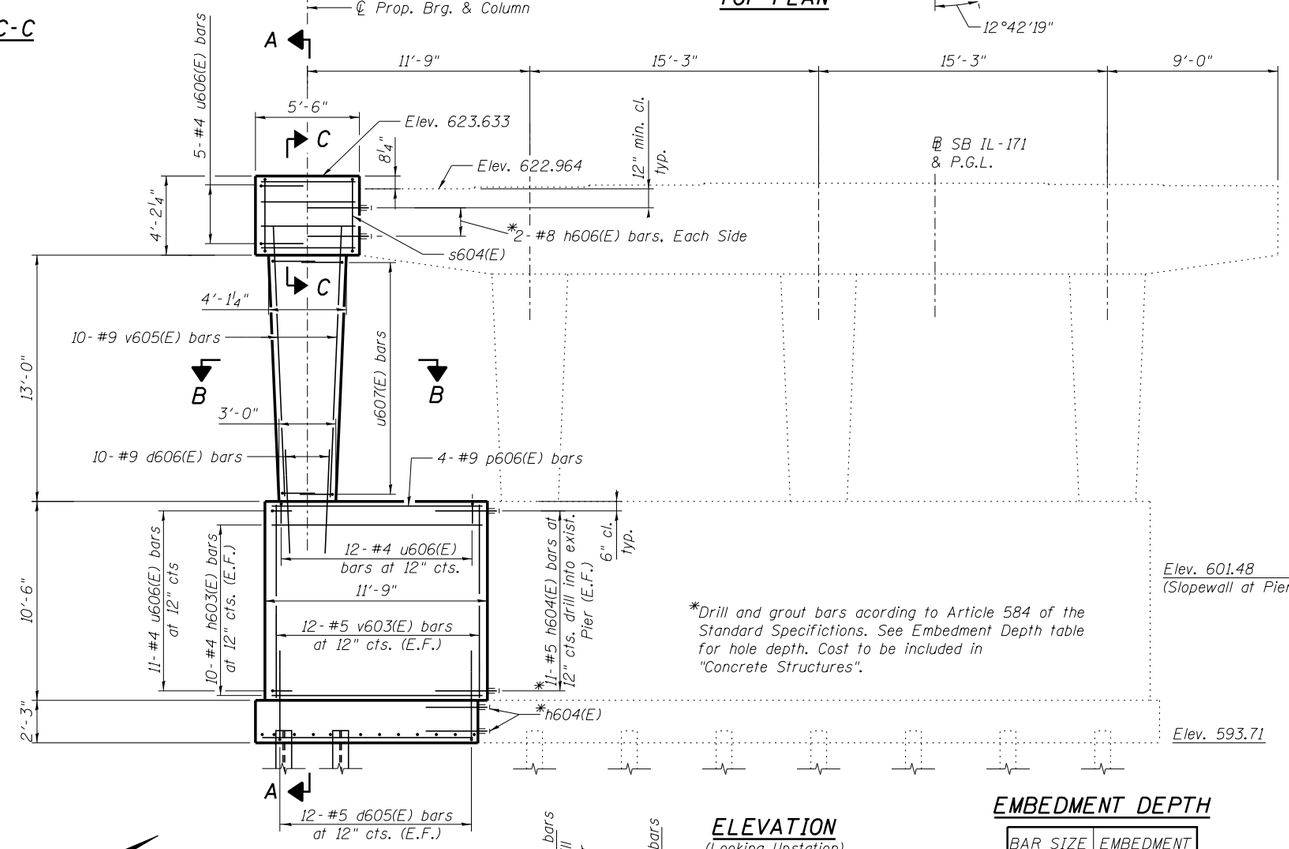

ELEVATION
(Looking Upstation)

EMBEDMENT DEPTH

BAR SIZE	EMBEDMENT
#5	8"
#8	12"

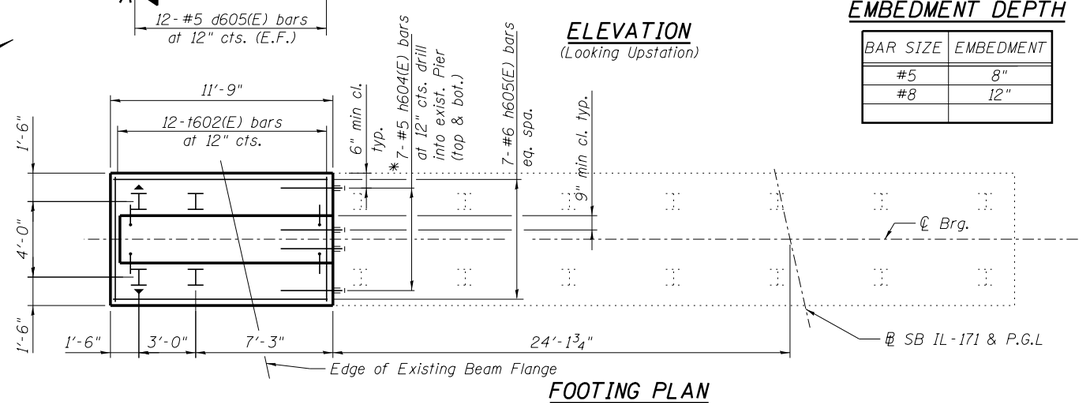

FOOTING PLAN

BILL OF MATERIAL

Bar	No.	Size	Length	Shape
d605(E)	24	#5	5'-11"	
d606(E)	10	#9	5'-6"	
h603(E)	20	#4	11'-5"	
h604(E)	36	#5	3'-3"	
h605(E)	7	#6	11'-5"	
h606(E)	6	#8	4'-0"	
p603(E)	4	#9	5'-2"	
p604(E)	4	#4	5'-2"	
p605(E)	3	#5	5'-2"	
p606(E)	4	#9	11'-5"	
s604(E)	6	#4	12'-9"	
t602(E)	12	#7	6'-8"	
u606(E)	6	#4	4'-2"	
u607(E)	26	#4	6'-7"	
v603(E)	24	#5	10'-2"	
v605(E)	10	#9	16'-0"	
Structure Excavation			Cu. Yd.	40
Concrete Structures			Cu. Yd.	24.2
Reinforcement Bars, Epoxy Coated			Pound	2,200
Furnishing Steel Piles HP12x53			Foot	90
Driving Piles			Foot	90
Test Pile Steel HP12x53			Each	1
Pile Shoes			Each	4
Cleaning Bridge Seats			Sq. Ft.	121

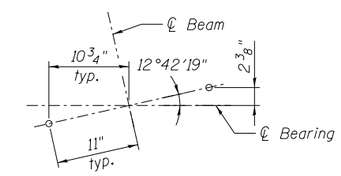

ANCHOR BOLT DETAIL

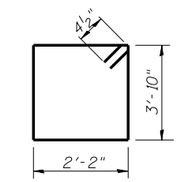

BAR s604(E)

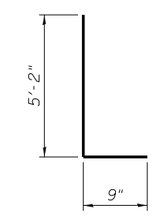

BAR d605(E)

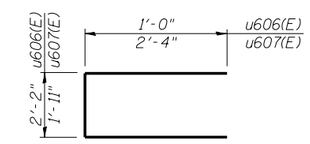

BARS u606(E) & u607(E)

benesch
engineers · scientists · planners
Alfred Benesch & Company
205 North Michigan Avenue, Suite 2400
Chicago, Illinois 60601
312-565-0450
Job No. 10093

FILE NAME = 016-0488-60J16-029-Pier 2 Widening Details.dgn	USER NAME = jsurber	DESIGNED - CMK	REVISED -
		CHECKED - JAW	REVISED -
PLOT SCALE = 1:1		DRAWN - CMK	REVISED -
PLOT DATE = 12/20/2013		CHECKED - JAW	REVISED -

STATE OF ILLINOIS
DEPARTMENT OF TRANSPORTATION

PIER 2 WIDENING DETAILS
STRUCTURE NO. 016-0488
SHEET NO. SH29 OF SH36 SHEETS

F.A.P. RTE.	SECTION	COUNTY	TOTAL SHEETS	SHEET NO.
373	2013-038B-R	COOK	821	767
		CONTRACT NO. 60J16		
		ILLINOIS FED. AID PROJECT		

Y:\chicago\100005\10093\Eng_Docs_Phase_II\SN_016_0488_0489_1st_Ave_over_ICC_RR\Final\Final 0488\016-0488-60J16-029-Pier 2 Widening Details.dgn
8:27:15 AM 7/16/2014

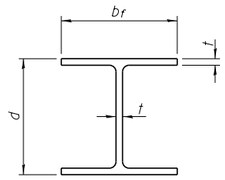

STEEL PILE TABLE

Designation	Depth d	Flange width b_f	Web and Flange thickness t	Encasement diameter A
HP 14x117	14 1/4"	14 7/8"	13/16"	30"
x102	14"	14 3/4"	11/16"	30"
x89	13 7/8"	14 3/4"	5/8"	30"
x73	13 5/8"	14 5/8"	1/2"	30"
HP 12x84	12 1/4"	12 1/4"	11/16"	24"
x74	12 1/8"	12 1/4"	5/8"	24"
x63	12"	12 1/8"	1/2"	24"
x53	11 3/4"	12"	7/16"	24"
HP 10x57	10"	10 1/4"	9/16"	24"
x42	9 3/4"	10 1/8"	7/16"	24"
HP 8x36	8"	8 1/8"	7/16"	18"

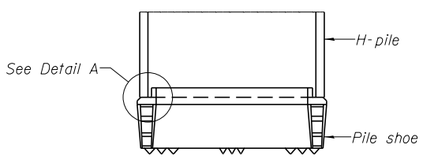

ELEVATION

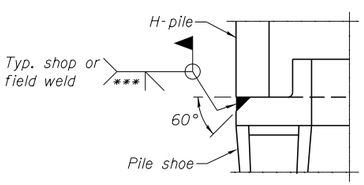

DETAIL A

H-PILE SHOE ATTACHMENT

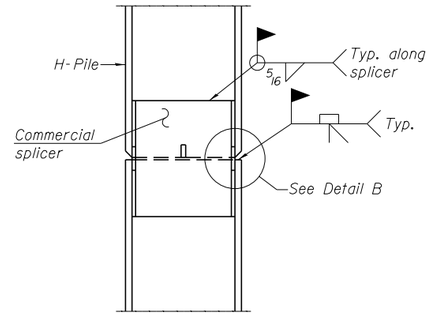

ELEVATION

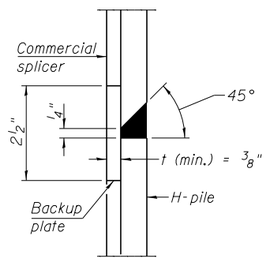

DETAIL "B"

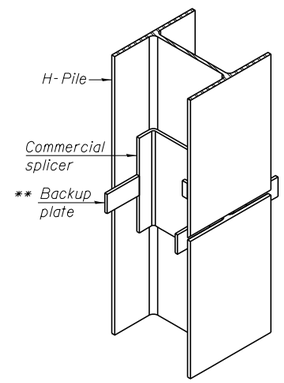

ISOMETRIC VIEW

WELDED COMMERCIAL SPLICE

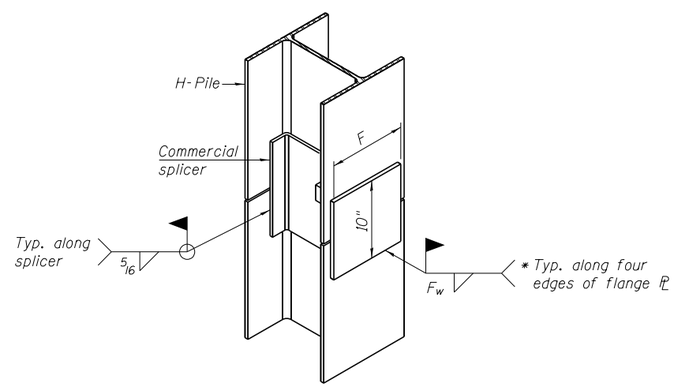

ISOMETRIC VIEW

WELDED COMMERCIAL SPLICE ALTERNATE

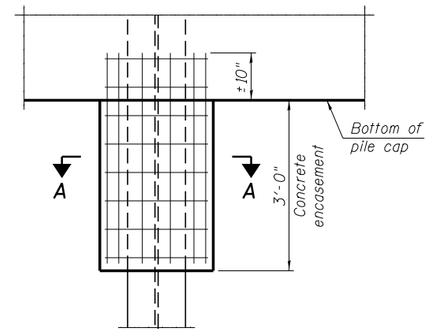

ELEVATION

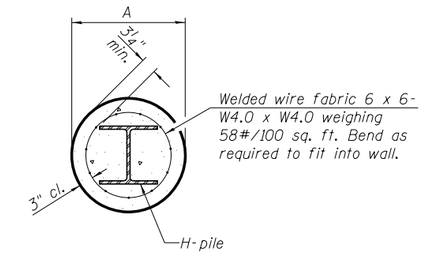

Note:
Forms for encasement may be omitted when soil conditions permit.

SECTION A-A

PILE ENCASEMENT

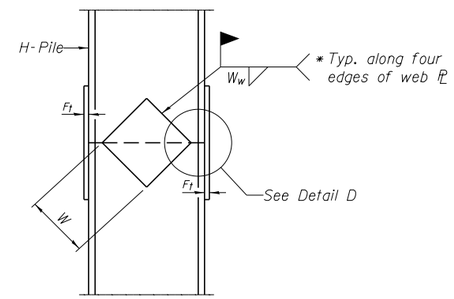

ELEVATION

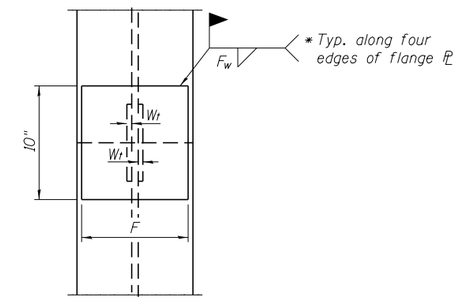

END VIEW

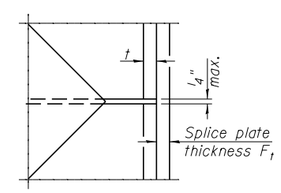

DETAIL D

Designation	F	F_t	F_w	W	W_t	W_w
HP 14x117	12 1/2"	1"	7/8"	7 3/4"	5/8"	1/2"
x102	12 1/2"	7/8"	3/4"	7 3/4"	5/8"	1/2"
x89	12 1/2"	3/4"	11/16"	7 3/4"	5/8"	1/2"
x73	12 1/2"	5/8"	9/16"	7 3/4"	5/8"	1/2"
HP 12x84	10"	7/8"	11/16"	6 1/2"	5/8"	1/2"
x74	10"	7/8"	11/16"	6 1/2"	5/8"	1/2"
x63	10"	5/8"	1/2"	6 1/2"	1/2"	3/8"
x53	10"	5/8"	1/2"	6 1/2"	1/2"	3/8"
HP 10x57	8"	3/4"	9/16"	5 1/4"	1/2"	3/8"
x42	8"	5/8"	9/16"	5 1/4"	1/2"	3/8"
HP 8x36	7"	5/8"	7/16"	4 1/4"	1/2"	3/8"

WELDED PLATE FIELD SPLICE

* Interrupt welds 1/4" from end of web and/or each flange.

** Remove portions of backup plates that extend outside the flanges.

*** Weld size per pile shoe manufacturer (5/16" min.).

Note:
The steel H-piles shall be according to AASHTO M270 Grade 50.

benesch engineers · scientists · planners
Alfred Benesch & Company
205 North Michigan Avenue, Suite 2400
Chicago, Illinois 60601
312-565-0450 Job No. 10093

F-HP 1-27-12

FILE NAME = 016-0488-60J16-030-H Pile Details.dgn	USER NAME = tjanicke	DESIGNED - CMK	REVISED -	STATE OF ILLINOIS DEPARTMENT OF TRANSPORTATION	HP PILE DETAILS STRUCTURE NO. 016-0488	F.A.P. RTE. 373	SECTION 2013-038B-R
		CHECKED - JAW	REVISED -			COUNTY COOK	TOTAL SHEETS 821 / SHEET NO. 768
	PLOT SCALE =	DRAWN - CMK	REVISED -			CONTRACT NO. 60J16	
	PLOT DATE = 12/20/2013	CHECKED - JAW	REVISED -		SHEET NO. 30 OF 36 SHEETS	ILLINOIS FED. AID PROJECT	

X:\10000S\10093\Eng_Docs_Phase_II\SN_016_0488_0489_1st_Ave_over_ICC_RR\Final\Final 0488\016-60J16-030-H Pile Details.dgn 6/23/2014 3:02:23 PM

Geo Services, Inc.
Geotechnical, Environmental & Civil Engineering
805 Kimmell Court - Suite 204
Naperville, Illinois 60565
(630) 355-1969

SOIL BORING LOG

GSI Job No. 10025
Page 1 of 3
Date 1/31/13

ROUTE FAP 373 (IL 171) DESCRIPTION IL Route 171 from 47th St. to 55th St. LOGGED BY KD
SECTION 2013-038B-R LOCATION NW 1/4, SEC. 13, TWP. T38N, RNG. R12E, 3rd PM
COUNTY Cook DRILLING METHOD MUD ROTARY HAMMER TYPE CME Automatic

STRUCT. NO. 016-0488
Station 22+90.24
BORING NO. SB-62
Station 21+78
Offset 60.70ft Left
Ground Surface Elev. 626.40 ft

Surface Water Elev. n/a ft
Stream Bed Elev. n/a ft
Groundwater Elev.:
First Encounter Dry to 10.0' ft
Upon Completion n/a ft
After ___ Hrs. ___ ft

Description	Elev.	DEPTH (ft)	BLOWS (/6")	UCS Qu (tsf)	MOIST (%)
16.0" CONCRETE					
	625.07				
CRUSHED STONE-loose			3		
			3		5
	623.40		3		
CLAY LOAM-dark brown & gray spotted black-soft to very stiff (Fill)			3		
			3	0.5	12
		-5	9	P	
			5		
			4	0.4	18
			4	B	
			3		
			3	1.2	23
		-10	6	B	
			5		
			4	0.6	19
			6	B	
			3		
			5	1.4	18
		-15	7	B	
			2		
			6	0.6	26
			6	B	
			3		
			4	0.7	30
		-20	6	B	

Description	Elev.	DEPTH (ft)	BLOWS (/6")	UCS Qu (tsf)	MOIST (%)
CLAY LOAM-dark brown & gray spotted black-soft to very stiff (Fill) *(continued)*					
			3		
			6		28
			9		
			4		
			8	1.0	20
		-25	9	P	
			3		
			5	1.4	15
			8	B	
			6		
			7	1.3	19
		-30	8	P	
			7		
			7	2.4	19
		-35	11	S	
			4		
			7	1.2	16
		-40	11	B	

The Unconfined Compressive Strength (UCS) Failure Mode is indicated by (B-Bulge, S-Shear, P-Penetrometer)
The SPT (N value) is the sum of the last two blow values in each sampling zone (AASHTO T206)
BBS, from 137 (Rev. 8-99)

Geo Services, Inc.
Geotechnical, Environmental & Civil Engineering
805 Kimmell Court - Suite 204
Naperville, Illinois 60565
(630) 355-1969

SOIL BORING LOG

GSI Job No. 10025
Page 2 of 3
Date 1/31/13

ROUTE FAP 373 (IL 171) DESCRIPTION IL Route 171 from 47th St. to 55th St. LOGGED BY KD
SECTION 2013-038B-R LOCATION NW 1/4, SEC. 13, TWP. T38N, RNG. R12E, 3rd PM
COUNTY Cook DRILLING METHOD MUD ROTARY HAMMER TYPE CME Automatic

STRUCT. NO. 016-0488
Station 22+90.24
BORING NO. SB-62
Station 21+78
Offset 60.70ft Left
Ground Surface Elev. 626.40 ft

Surface Water Elev. n/a ft
Stream Bed Elev. n/a ft
Groundwater Elev.:
First Encounter Dry to 10.0' ft
Upon Completion n/a ft
After ___ Hrs. ___ ft

Description	Elev.	DEPTH (ft)	BLOWS (/6")	UCS Qu (tsf)	MOIST (%)
CLAY LOAM-dark brown & gray spotted black-soft to very stiff (Fill) *(continued)*					
	584.40				
ORGANIC SILTY CLAY-gray-medium stiff			1		
			2	0.9	54
		-45	14	B	
	579.40				
CLAY LOAM-gray-hard			11		
			20	9.8	14
		-50	34	S	
			30		
			34	9.8	9
		-55	50/5"	S	
	569.40				
SILT-gray-dense to very dense			16		
			33		14
		-60	33		

Description	Elev.	DEPTH (ft)	BLOWS (/6")	UCS Qu (tsf)	MOIST (%)
SILT-gray-dense to very dense *(continued)*					
			15		
			20		15
		-65	35		
			14		
			17		21
		-70	30		
	553.40				
COBBLES & BOULDERS-very dense			50/0"		
		-75			
			27		
			30		5
		-80	50/2"		

The Unconfined Compressive Strength (UCS) Failure Mode is indicated by (B-Bulge, S-Shear, P-Penetrometer)
The SPT (N value) is the sum of the last two blow values in each sampling zone (AASHTO T206)
BBS, from 137 (Rev. 8-99)

Geo Services, Inc.
Geotechnical, Environmental & Civil Engineering
805 Kimmell Court - Suite 204
Naperville, Illinois 60565
(630) 355-1969

SOIL BORING LOG

GSI Job No. 10025
Page 3 of 3
Date 1/31/13

ROUTE FAP 373 (IL 171) DESCRIPTION IL Route 171 from 47th St. to 55th St. LOGGED BY KD
SECTION 2013-038B-R LOCATION NW 1/4, SEC. 13, TWP. T38N, RNG. R12E, 3rd PM
COUNTY Cook DRILLING METHOD MUD ROTARY HAMMER TYPE CME Automatic

STRUCT. NO. 016-0488
Station 22+90.24
BORING NO. SB-62
Station 21+78
Offset 60.70ft Left
Ground Surface Elev. 626.40 ft

Surface Water Elev. n/a ft
Stream Bed Elev. n/a ft
Groundwater Elev.:
First Encounter Dry to 10.0' ft
Upon Completion n/a ft
After ___ Hrs. ___ ft

Description	Elev.	DEPTH (ft)	BLOWS (/6")	UCS Qu (tsf)	MOIST (%)
COBBLES & BOULDERS-very dense *(continued)*					
	541.90				
Borehole continued with rock coring.		-85			
		-90			
		-95			
		-100			

The Unconfined Compressive Strength (UCS) Failure Mode is indicated by (B-Bulge, S-Shear, P-Penetrometer)
The SPT (N value) is the sum of the last two blow values in each sampling zone (AASHTO T206)
BBS, from 137 (Rev. 8-99)

Z:\PROJECTS\2010\10025 BENESCH, L-171 FIRST AVE. (IDOT PTB 154, ITEM 14)\10025 BORING LOGS\10025_LOG.GPJ 6/7/13

benesch
engineers · scientists · planners
Alfred Benesch & Company
205 North Michigan Avenue, Suite 2400
Chicago, Illinois 60601
312-565-0450 Job No. 10093

FILE NAME =	USER NAME = tjanicke	DESIGNED - CMK	REVISED -
		CHECKED - JAW	REVISED -
016-0488-60J16-031-Soil Boring Logs 1 of 6.dgn	PLOT SCALE = 1.0000 ' / in.	DRAWN - CMK	REVISED -
	PLOT DATE = 12/20/2013	CHECKED - JAW	REVISED -

STATE OF ILLINOIS
DEPARTMENT OF TRANSPORTATION

BORING LOGS (1 OF 6)
STRUCTURE NO. 016-0488
SHEET NO. SH31 OF SH36 SHEETS

F.A.P. RTE.	SECTION	COUNTY	TOTAL SHEETS	SHEET NO.
373	2013-038B-R	COOK	821	769
		CONTRACT NO. 60J16		
		ILLINOIS FED. AID PROJECT		

X:\10000S\10093\Eng_Docs_Phase_II\SN_016_0488_0489_1st_Ave_over_ICC_RR\Final 0488\016-0488-60J16-031-Soil Boring Logs 1 of 6.dgn
3:02:25 PM
6/23/2014

Geo Services, Inc.
Geotechnical, Environmental & Civil Engineering
805 Ammerst Court, Suite 204
Naperville, Illinois 60565
(630) 355-2888

ROCK CORE LOG

PAGE 1 of 1
DATE 1/31/2013
LOGGED BY DR
GSI JOB No. 10025

FAP Rte. 373 (IL 171) DESCRIPTION 1st Ave. Bridge Rehabilitation & Replacement, 47th St. to 55th St.
SECTION 2013-038B-R LOCATION SEC 11, 12, 13 & 14 T 38 N, R 12 E, 3rd PM
COUNTY Cook CORING METHOD Rotary Wash
STRUCT. NO. 016-0488 CORING BARREL TYPE & SIZE NX Double Swivel-10 ft
Station 22+90.24 Core Diameter 2.0 in
BORING NO. SB-62 Top of Rock Elev. 541.5
Station 21+78 Begin Core Elev. 545.4
Offset 60.7' Left
Ground Surface Elev. 626.4

	DEPTH (ft)	CORE (#)	RECOVERY (%)	R.Q.D. (%)	CORE TIME (min/ft)	STRENGTH (tsf)
RUN 1 (-81.0' to -84.5') Cobbles & boulders.	84.5	1				n/a
SILURIAN SYSTEM, NIAGARAN SERIES DOLOMITE RUN 2 (-84.5' to -93.5') Light gray mottled gray & fine grained dolomite bedrock with horizontal bedding. Horizontal fractures @ -85.0', -85.3', -86.0', -86.2', -86.5', -87.0', -87.5', -88.2', -88.5', -89.2', -90.6', -91.5' & -92.1'.	88.5	2	96.7	81.1	n/a	1115 @ -84.5'
	-93.5					

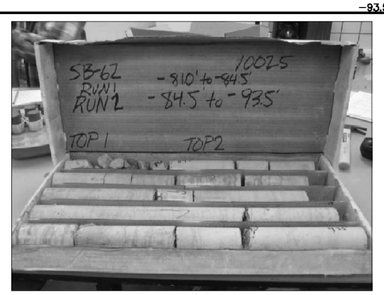

Color pictures of the cores Yes Cores will be stored for examination for —
The "Strength" column represents the uniaxial compressive strength of the core sample (ASTM D-2938)

Geo Services, Inc.
Geotechnical, Environmental & Civil Engineering
805 Ammerst Court, Suite 204
Naperville, Illinois 60565
(630) 355-2888

SOIL BORING LOG

GSI Job No. 10025
Page 1 of 3
Date 3/25/13

ROUTE FAP 373 (IL 171) DESCRIPTION IL Route 171 from 47th St. to 55th St. LOGGED BY JZ
SECTION 2013-038B-R LOCATION NW 1/4, SEC. 13, TWP. T38N, RNG. R12E, 3rd PM
COUNTY Cook DRILLING METHOD MUD ROTARY HAMMER TYPE CME Automatic
STRUCT. NO. 016-0488
Station 22+90.24
BORING NO. SB-63
Station 22+57
Offset 58.90ft Left
Ground Surface Elev. 627.10 ft

Surface Water Elev. n/a ft
Stream Bed Elev. n/a ft
Groundwater Elev.:
First Encounter n/a ft
Upon Completion n/a ft
After Hrs. ft

Description	Elev.	DEPTH (ft)	BLOWS (/6")	UCS Qu (tsf)	MOIST (%)
9.0" CONCRETE BRIDGE DECK	626.35				
VOID					
		-5			
10.0" CONCRETE SLOPE WALL	617.60	-10			
CLAY to CLAY LOAM-brown & gray-stiff to very stiff (Fill)	616.77		18 15 16	22	
		-15			
			3 3 5	1.0 B	21
		-20	4 4 5	2.5 P	20
CLAY to CLAY LOAM-brown & gray-stiff to very stiff (Fill) (continued)			5 5 6	1.0 B	21
		-25	4 5 6	1.5 P	18
			3 4 5	1.1 B	20
		-30	4 5 6	2.1 B	18
		-35	8 9 11	2.0 B	25
SILTY CLAY LOAM-gray-medium dense (Apparent Fill)	590.10	-40	8 11 12		20

The Unconfined Compressive Strength (UCS) Failure Mode is indicated by (B-Bulge, S-Shear, P-Penetrometer)
The SPT (N value) is the sum of the last two blow values in each sampling zone (AASHTO T206)
BBS, from 137 (Rev. 8-99)

Z:\PROJECT\S\2013\10025 BENESCH, IL-171 FIRST AVE. (DOT FTB 154, ITEM 14)\10025 BORING LOGS\10025_LOG.GPJ 6/7/13

Geo Services, Inc.
Geotechnical, Environmental & Civil Engineering
805 Ammerst Court, Suite 204
Naperville, Illinois 60565
(630) 355-2888

SOIL BORING LOG

GSI Job No. 10025
Page 2 of 3
Date 3/25/13

ROUTE FAP 373 (IL 171) DESCRIPTION IL Route 171 from 47th St. to 55th St. LOGGED BY JZ
SECTION 2013-038B-R LOCATION NW 1/4, SEC. 13, TWP. T38N, RNG. R12E, 3rd PM
COUNTY Cook DRILLING METHOD MUD ROTARY HAMMER TYPE CME Automatic
STRUCT. NO. 016-0488
Station 22+90.24
BORING NO. SB-63
Station 22+57
Offset 58.90ft Left
Ground Surface Elev. 627.10 ft

Surface Water Elev. n/a ft
Stream Bed Elev. n/a ft
Groundwater Elev.:
First Encounter n/a ft
Upon Completion n/a ft
After Hrs. ft

Description	Elev.	DEPTH (ft)	BLOWS (/6")	UCS Qu (tsf)	MOIST (%)
SILTY CLAY LOAM-gray-medium dense (Apparent Fill) (continued)					
		-45	3 5 6	22	
CLAY to CLAY LOAM-gray-very stiff to hard	580.10	-50	11 18 28	6.4 B	14
		-55	23 29 44	3.2 B	23
SANDY CLAY LOAM-gray-very dense	570.10	-60	50/5"	11	
SANDY CLAY LOAM-gray-very dense (continued)					
CLAY-gray-hard	565.10	-65	29 20 23	5.9 B	20
CLAYEY SAND, GRAVEL & FRACTURED ROCK	559.10	-70	50/2"		19
Drillers Note: 100.0% water loss from -73.0' to -84.0'.		-75	50/3"		10
		-80	50/1"		

The Unconfined Compressive Strength (UCS) Failure Mode is indicated by (B-Bulge, S-Shear, P-Penetrometer)
The SPT (N value) is the sum of the last two blow values in each sampling zone (AASHTO T206)
BBS, from 137 (Rev. 8-99)

Z:\PROJECT\S\2013\10025 BENESCH, IL-171 FIRST AVE. (DOT FTB 154, ITEM 14)\10025 BORING LOGS\10025_LOG.GPJ 6/7/13

benesch
engineers · scientists · planners
Alfred Benesch & Company
205 North Michigan Avenue, Suite 2400
Chicago, Illinois 60601
312-565-0450 Job No. 10093

FILE NAME =	USER NAME = tjanicke	DESIGNED - CMK	REVISED -
		CHECKED - JAW	REVISED -
016-0488-60J16-032-Soil Boring Logs 2 of 6.dgn	GRIDS SCALE =	DRAWN - CMK	REVISED -
	PLOT DATE = 12/20/2013	CHECKED - JAW	REVISED -

STATE OF ILLINOIS
DEPARTMENT OF TRANSPORTATION

BORING LOGS (2 OF 6)
STRUCTURE NO. 016-0488
SHEET NO. SH32 OF SH36 SHEETS

F.A.P. RTE.	SECTION	COUNTY	TOTAL SHEETS	SHEET NO.
373	2013-038B-R	COOK	821	770
		CONTRACT NO. 60J16		
		ILLINOIS FED. AID PROJECT		

X:\10000S\10093\Eng_Docs_Phase_II\SN_016_0488_0489_1st_Ave_over_ICC_RR\Final 0488\016-0488-60J16-032-Soil Boring Logs 2 of 6.dgn 3:02:30 PM 6/23/2014

Geo Services, Inc.
Geotechnical, Environmental & Civil Engineering
805 Aimwell Court - Suite 204
Naperville, Illinois 60565
(630) 355-2838

SOIL BORING LOG

GSI Job No. 10025
Page 3 of 3
Date 3/25/13

ROUTE FAP 373 (IL 171) DESCRIPTION IL Route 171 from 47th St. to 55th St. LOGGED BY JZ

SECTION 2013-038B-R LOCATION NW 1/4, SEC. 13, TWP. T38N, RNG. R12E, 3rd PM

COUNTY Cook DRILLING METHOD MUD ROTARY HAMMER TYPE CME Automatic

STRUCT. NO. 016-0488
Station 22+90.24

BORING NO. SB-63
Station 22+57
Offset 58.90ft Left
Ground Surface Elev. 627.10 ft

Surface Water Elev. n/a ft
Stream Bed Elev. n/a ft

Groundwater Elev.:
First Encounter n/a ft
Upon Completion n/a ft
After ___ Hrs. ___ ft

Description	Elev.	DEPTH (ft)	BLOWS (/6")	UCS Qu (tsf)	MOIST (%)
CLAYEY SAND, GRAVEL & FRACTURED ROCK *(continued)*					
	543.10				
Borehole continued with rock coring.		-85			
		-90			
		-95			
		-100			

The Unconfined Compressive Strength (UCS) Failure Mode is indicated by (B-Bulge, S-Shear, P-Penetrometer)
The SPT (N value) is the sum of the last two blow values in each sampling zone (AASHTO T206)
BBS, from 137 (Rev. 8-99)

Z:\PROJECTS\2010\10025 BENESCH, IL-171 FIRST AVE. (IDOT PTB-154, ITEM 141)\10025 BORING LOGS\10025_LOG.GPJ 6/7/13

Geo Services, Inc.
Geotechnical, Environmental & Civil Engineering
805 Aimwell Court - Suite 204
Naperville, Illinois 60565
(630) 355-2838

ROCK CORE LOG

PAGE 1 of 1
DATE 3/25/2013
LOGGED BY JK
GSI JOB No. 10025

FAP Rte. 373 (IL 171) DESCRIPTION 1st Ave. Bridge Rehabilitation & Replacement, 47th St. to 55th St.

SECTION 2013-038B-R LOCATION SEC 11, 12, 13 & 14 T 38 N, R 12 E, 3rd PM

COUNTY Cook CORING METHOD Rotary Wash

STRUCT. NO. 016-0488
Station 22+90.24

BORING NO. SB-63
Station 22+57
Offset 58.9' Left
Ground Surface Elev. 627.1

CORING BARREL TYPE & SIZE NX Double Swivel-10 ft
Core Diameter 2.0 in
Top of Rock Elev. 543.1
Begin Core Elev. 543.1

Description	DEPTH (ft)	CORE (#)	RECOVERY (%)	R.Q.D. (%)	CORE TIME (min/ft)	STRENGTH (tsf)
SILURIAN SYSTEM, NIAGARAN SERIES DOLOMITE RUN 1 (-84.0' to -94.0') Light gray to gray with horizontal to wavy bedding.Slightly porous with some thin clay partings. Horizontal fractures @ -84.8', -85.2', -85.6', -86.1', -86.4', -87.1' & -87.6'. Transverse fractures @ -88.2' & -88.8'. Horizontal fractures @ -89.5', -89.8', -90.1', -90.5', -91.2', -91.8', -92.0' & -92.5'.		1	87.0	66.0	n/a	365 @ -94.1'
	-89.0					
	-94.0					

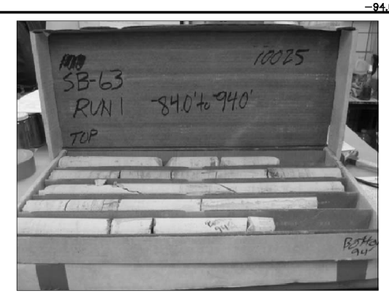

Color pictures of the cores Yes Cores will be stored for examination for —
The "Strength" column represents the uniaxial compressive strength of the core sample (ASTM D-2938)

Geo Services, Inc.
Geotechnical, Environmental & Civil Engineering
805 Aimwell Court - Suite 204
Naperville, Illinois 60565
(630) 355-2838

SOIL BORING LOG

GSI Job No. 10025
Page 1 of 3
Date 3/25/13

ROUTE FAP 373 (IL 171) DESCRIPTION IL Route 171 from 47th St. to 55th St. LOGGED BY JZ

SECTION 2013-038B-R LOCATION NW 1/4, SEC. 13, TWP. T38N, RNG. R12E, 3rd PM

COUNTY Cook DRILLING METHOD MUD ROTARY HAMMER TYPE CME Automatic

STRUCT. NO. 016-0488
Station 22+90.24

BORING NO. SB-64
Station 23+39
Offset 58.90ft Left
Ground Surface Elev. 627.50 ft

Surface Water Elev. n/a ft
Stream Bed Elev. n/a ft

Groundwater Elev.:
First Encounter n/a ft
Upon Completion n/a ft
After ___ Hrs. ___ ft

Description	Elev.	DEPTH (ft)	BLOWS (/6")	UCS Qu (tsf)	MOIST (%)
9.0" CONCRETE BRIDGE DECK	626.75				
VOID		-5			
		-10			
		-15			
6.0" CONCRETE SLOPE WALL	612.50				
CLAY to CLAY LOAM-dark brown & gray-stiff (Fill)	612.00		3 4 7	21	
		-20	3 5 7	0.6 B	15
CLAY to CLAY LOAM-dark brown & gray-stiff (Fill) *(continued)*					
		-25	4 4 3		
			4		
		-30	4 4		29
			5		
		-35	5 4	1.8 B	16
SILTY CLAY LOAM-gray-medium dense	599.50				
		-40	9 8 6		16
CLAY-brown & gray-stiff to very stiff	595.50				
			7 11 10	2.5 B	24
			4		
			4 6	1.5 B	25

The Unconfined Compressive Strength (UCS) Failure Mode is indicated by (B-Bulge, S-Shear, P-Penetrometer)
The SPT (N value) is the sum of the last two blow values in each sampling zone (AASHTO T206)
BBS, from 137 (Rev. 8-99)

Z:\PROJECTS\2010\10025 BENESCH, IL-171 FIRST AVE. (IDOT PTB-154, ITEM 141)\10025 BORING LOGS\10025_LOG.GPJ 6/7/13

benesch
engineers · scientists · planners
Alfred Benesch & Company
205 North Michigan Avenue, Suite 2400
Chicago, Illinois 60601
312-565-0450 Job No. 10093

FILE NAME = 016-0488-60J16-033-Soil Boring Logs 3 of 6.dgn	USER NAME = tjanicke	DESIGNED - CMK	REVISED -	STATE OF ILLINOIS DEPARTMENT OF TRANSPORTATION	BORING LOGS (3 OF 6) STRUCTURE NO. 016-0488	F.A.P. RTE. 373	SECTION 2013-038B-R	COUNTY COOK
		CHECKED - JAW	REVISED -					TOTAL SHEETS 821 / SHEET NO. 771
	USER SCALE =	DRAWN - CMK	REVISED -			CONTRACT NO. 60J16		
	PLOT DATE = 12/20/2013	CHECKED - JAW	REVISED -		SHEET NO. SH33 OF SH36 SHEETS	ILLINOIS FED. AID PROJECT		

6/23/2014 3:02:36 PM X:\10000S\10093\Eng_Docs_Phase_II\SN_016_0488_0489_1st_Ave_over_ICC_RR\Final\Final 0488\016-60J16-033-Soil Boring Logs 3 of 6.dgn

Geo Services, Inc.
Geotechnical, Environmental & Civil Engineering
805 Emmerich Court, Suite 204
Naperville, Illinois 60565
(630) 355-2838

SOIL BORING LOG

GSI Job No. 10025
Page 2 of 3
Date 3/25/13

ROUTE FAP 373 (IL 171) DESCRIPTION IL Route 171 from 47th St. to 55th St. LOGGED BY JZ

SECTION 2013-038B-R LOCATION NW 1/4, SEC. 13, TWP. T38N, RNG. R12E, 3rd PM

COUNTY Cook DRILLING METHOD MUD ROTARY HAMMER TYPE CME Automatic

STRUCT. NO. 016-0488
Station 22+90.24

BORING NO. SB-64
Station 23+39
Offset 58.90ft Left
Ground Surface Elev. 627.50 ft

Surface Water Elev. n/a ft
Stream Bed Elev. n/a ft

Groundwater Elev.:
First Encounter n/a ft
Upon Completion n/a ft
After ___ Hrs. ___ ft

Description	Elev.	DEPTH (ft)	BLOWS (/6")	UCS Qu (tsf)	MOIST (%)
CLAY-brown & gray-stiff to very stiff *(continued)*					
			4		
			4	2.4	23
		-45	8	B	
CLAY LOAM-gray-hard	580.50				
			17		
			30	4.5	12
		-50	23	P	
CLAY-gray-stiff	575.50				
			13		
			17	2.0	18
		-55	24	P	
			21		
			24	2.8	29
		-60	24	B	
CLAY-gray-stiff *(continued)*					
SANDY CLAY LOAM-gray-dense	565.50				
			8		
			14	4.5	14
		-65	24	P	
CLAY-gray-hard	560.50				
			9		
			13	5.4	20
		-70	24	B	
CLAYEY SAND, GRAVEL & FRACTURED ROCK	555.50				
			50/4"		
					12
		-75			
			50/1"		
					2
		-80			

The Unconfined Compressive Strength (UCS) Failure Mode is indicated by (B-Bulge, P-Penetrometer)
The SPT (N value) is the sum of the last two blow values in each sampling zone (AASHTO T206)
BBS, from 137 (Rev. 8-99)

Z:\PROJECT\2012\01\10025 BENESCH IL-171 FIRST AVE. (DOT FTB 154, ITEM 14)\10025 BORING LOGS\10025_LOG.GPJ 6/7/13

Geo Services, Inc.
Geotechnical, Environmental & Civil Engineering
805 Emmerich Court, Suite 204
Naperville, Illinois 60565
(630) 355-2838

SOIL BORING LOG

GSI Job No. 10025
Page 3 of 3
Date 3/25/13

ROUTE FAP 373 (IL 171) DESCRIPTION IL Route 171 from 47th St. to 55th St. LOGGED BY JZ

SECTION 2013-038B-R LOCATION NW 1/4, SEC. 13, TWP. T38N, RNG. R12E, 3rd PM

COUNTY Cook DRILLING METHOD MUD ROTARY HAMMER TYPE CME Automatic

STRUCT. NO. 016-0488
Station 22+90.24

BORING NO. SB-64
Station 23+39
Offset 58.90ft Left
Ground Surface Elev. 627.50 ft

Surface Water Elev. n/a ft
Stream Bed Elev. n/a ft

Groundwater Elev.:
First Encounter n/a ft
Upon Completion n/a ft
After ___ Hrs. ___ ft

Description	Elev.	DEPTH (ft)	BLOWS (/6")	UCS Qu (tsf)	MOIST (%)
CLAYEY SAND, GRAVEL & FRACTURED ROCK *(continued)*					
	544.50				
Drillers Observation: Apparent Bedrock.	544.00				
Borehole continued with rock coring.		-85			
		-90			
		-95			
		-100			

The Unconfined Compressive Strength (UCS) Failure Mode is indicated by (B-Bulge, P-Penetrometer)
The SPT (N value) is the sum of the last two blow values in each sampling zone (AASHTO T206)
BBS, from 137 (Rev. 8-99)

Z:\PROJECT\2012\01\10025 BENESCH IL-171 FIRST AVE. (DOT FTB 154, ITEM 14)\10025 BORING LOGS\10025_LOG.GPJ 6/7/13

Geo Services, Inc.
Geotechnical, Environmental & Civil Engineering
805 Emmerich Court, Suite 204
Naperville, Illinois 60565
(630) 355-2838

ROCK CORE LOG

PAGE 1 of 1
DATE 3/25/2013
LOGGED BY JK
GSI JOB No. 10025

FAP Rte. 373 (IL 171) DESCRIPTION 1st Ave. Bridge Rehabilitation & Replacement, 47th St. to 55th St.

SECTION 2013-038B-R LOCATION SEC 11, 12, 13 & 14 T 38 N, R 12 E, 3rd PM

COUNTY Cook CORING METHOD Rotary Wash

STRUCT. NO. 016-0488 CORING BARREL TYPE & SIZE NX Double Swivel-10 ft
Station 22+90.24 Core Diameter 2.0 in
BORING NO. SB-64 Top of Rock Elev. 544.5
Station 23+39 Begin Core Elev. 544.0
Offset 58.9' Left
Ground Surface Elev. 627.5

Description	DEPTH (ft)	CORE (#)	RECOVERY (%)	R.Q.D. (%)	CORE TIME (min/ft)	STRENGTH (tsf)
SILURIAN SYSTEM, NIAGARAN SERIES DOLOMITE		1	97.0	84.0	n/a	833 @ -83.6'
RUN 1 (-83.5' to -93.5') Light gray to gray with horizontal to wavy bedding.Slightly porous with some thin clay partings. Horizontal fractures @ -84.4', -85.2', -85.5', -85.8', -86.0', -86.1', -86.5' -86.6', -86.7', -87.3', -88.0', -88.1', -88.6', -89.4', -90.2', -90.9', -91.6', -92.0', -92.4', -93.0' & -93.1'.	-88.5					
	-93.5					

Color pictures of the cores Yes Cores will be stored for examination for —
The "Strength" column represents the uniaxial compressive strength of the core sample (ASTM D-2938)

benesch
engineers · scientists · planners
Alfred Benesch & Company
205 North Michigan Avenue, Suite 2400
Chicago, Illinois 60601
312-565-0450 Job No. 10093

FILE NAME =	USER NAME = tjanicke	DESIGNED - CMK	REVISED -
		CHECKED - JAW	REVISED -
016-0488-60J16-034-Soil Boring Logs 4 of 6.dgn	GRIDS SCALE =	DRAWN - CMK	REVISED -
	PLOT DATE = 12/20/2013	CHECKED - JAW	REVISED -

STATE OF ILLINOIS
DEPARTMENT OF TRANSPORTATION

BORING LOGS (4 OF 6)
STRUCTURE NO. 016-0488
SHEET NO. SH34 OF SH36 SHEETS

F.A.P. RTE.	SECTION	COUNTY	TOTAL SHEETS	SHEET NO.
373	2013-038B-R	COOK	821	772
		CONTRACT NO. 60J16		
		ILLINOIS FED. AID PROJECT		

X:\10000S\10093\Eng_Docs_Phase_II\SN_016_0488_0489_1st_Ave_over_ICC_RR\Final\Final 0488\016-60J16-034-Soil Boring Logs 4 of 6.dgn 3:02:41 PM 6/23/2014

Geo Services, Inc.
Geotechnical, Environmental & Civil Engineering
805 Kimmell Court - Suite 204
Naperville, Illinois 60565
(630) 355-1969

SOIL BORING LOG

GSI Job No. 10025
Page 1 of 3
Date 1/11/13

ROUTE FAP 373 (IL 171) DESCRIPTION IL Route 171 from 47th St. to 55th St. LOGGED BY KD

SECTION 2013-038B-R LOCATION NW 1/4, SEC. 13, TWP. T38N, RNG. R12E, 3rd PM

COUNTY Cook DRILLING METHOD HSA/MUD ROTARY HAMMER TYPE CME Automatic

STRUCT. NO. 016-0488
Station 22+90.24

BORING NO. SB-65
Station 24+24
Offset 60.00ft Left
Ground Surface Elev. 627.50 ft

Surface Water Elev. n/a ft
Stream Bed Elev. n/a ft

Groundwater Elev.:
First Encounter Dry to 10.0' ft
Upon Completion n/a ft
After ___ Hrs. ___ ft

Description	Elev.	DEPTH (ft)	BLOWS (/6")	UCS Qu (tsf)	MOIST (%)
3.0" ASPHALT, 14.0" CONCRETE	626.08				
SANDY CLAY LOAM with Gravel-black-medium dense (Fill)	624.50		1		
			4		11
			9		
CLAY LOAM-dark brown & gray-medium stiff to very stiff (Fill)			3		
			3	1.1	20
		-5	4	B	
			3		
			3	1.2	18
			6	B	
			3		
			5	4.9	14
		-10	7	B	
			6		
			6	2.4	16
			8	S	
			3		
			4	1.2	21
		-15	4	B	
			3		
			5	1.4	20
			6	B	
			2		
			4	1.2	18
		-20	6	B	

Description	DEPTH (ft)	BLOWS (/6")	UCS Qu (tsf)	MOIST (%)
CLAY LOAM-dark brown & gray-medium stiff to very stiff (Fill) *(continued)*				
		3		
		4	1.3	18
		7	B	
		6		
		11	0.8	29
	-25	8	S	
		2		
		5	1.6	16
		5	B	
		7		
		7	2.3	23
	-30	39	P	
		6		
		6	1.5	23
	-35	7	B	
		5		
		6	2.1	18
	-40	8	S	

The Unconfined Compressive Strength (UCS) Failure Mode is indicated by (B-Bulge, S-Shear, P-Penetrometer)
The SPT (N value) is the sum of the last two blow values in each sampling zone (AASHTO T206)
BBS, from 137 (Rev. 8-99)

Geo Services, Inc.
Geotechnical, Environmental & Civil Engineering
805 Kimmell Court - Suite 204
Naperville, Illinois 60565
(630) 355-1969

SOIL BORING LOG

GSI Job No. 10025
Page 2 of 3
Date 1/11/13

ROUTE FAP 373 (IL 171) DESCRIPTION IL Route 171 from 47th St. to 55th St. LOGGED BY KD

SECTION 2013-038B-R LOCATION NW 1/4, SEC. 13, TWP. T38N, RNG. R12E, 3rd PM

COUNTY Cook DRILLING METHOD HSA/MUD ROTARY HAMMER TYPE CME Automatic

STRUCT. NO. 016-0488
Station 22+90.24

BORING NO. SB-65
Station 24+24
Offset 60.00ft Left
Ground Surface Elev. 627.50 ft

Surface Water Elev. n/a ft
Stream Bed Elev. n/a ft

Groundwater Elev.:
First Encounter Dry to 10.0' ft
Upon Completion n/a ft
After ___ Hrs. ___ ft

Description	Elev.	DEPTH (ft)	BLOWS (/6")	UCS Qu (tsf)	MOIST (%)
CLAY LOAM-dark brown & gray-medium stiff to very stiff (Fill) *(continued)*					
			4		
			8	1.4	22
		-45	11	B	
CLAY LOAM-gray-very stiff to hard	581.50				
			20		
			19	4.2	11
		-50	26	B	
			13		
			50/5"	2.3	13
		-55		B	
			11		
			16	5.5	13
		-60	23	B	

Description	Elev.	DEPTH (ft)	BLOWS (/6")	UCS Qu (tsf)	MOIST (%)
CLAY LOAM-gray-very stiff to hard *(continued)*	565.50				
SILTY CLAY LOAM-gray-dense	560.50		9		
			13	1.0	21
		-65	18	B	
CLAY LOAM-gray-hard	555.50		11		
			17	8.1	10
		-70	26	B	
SILTY LOAM-gray-dense	550.50		20		
			25		21
		-75	25		
SILTY CLAY LOAM-gray-dense			18		
			22	10.0	14
		-80	28	S	

The Unconfined Compressive Strength (UCS) Failure Mode is indicated by (B-Bulge, S-Shear, P-Penetrometer)
The SPT (N value) is the sum of the last two blow values in each sampling zone (AASHTO T206)
BBS, from 137 (Rev. 8-99)

Geo Services, Inc.
Geotechnical, Environmental & Civil Engineering
805 Kimmell Court - Suite 204
Naperville, Illinois 60565
(630) 355-1969

SOIL BORING LOG

GSI Job No. 10025
Page 3 of 3
Date 1/11/13

ROUTE FAP 373 (IL 171) DESCRIPTION IL Route 171 from 47th St. to 55th St. LOGGED BY KD

SECTION 2013-038B-R LOCATION NW 1/4, SEC. 13, TWP. T38N, RNG. R12E, 3rd PM

COUNTY Cook DRILLING METHOD HSA/MUD ROTARY HAMMER TYPE CME Automatic

STRUCT. NO. 016-0488
Station 22+90.24

BORING NO. SB-65
Station 24+24
Offset 60.00ft Left
Ground Surface Elev. 627.50 ft

Surface Water Elev. n/a ft
Stream Bed Elev. n/a ft

Groundwater Elev.:
First Encounter Dry to 10.0' ft
Upon Completion n/a ft
After ___ Hrs. ___ ft

Description	Elev.	DEPTH (ft)	BLOWS (/6")	UCS Qu (tsf)	MOIST (%)
SILTY CLAY LOAM-gray-dense *(continued)*	544.50				
Drillers Observation: Apparent bedrock	544.00				
Borehole continued with rock coring.		-85			
		-90			
		-95			
		-100			

The Unconfined Compressive Strength (UCS) Failure Mode is indicated by (B-Bulge, S-Shear, P-Penetrometer)
The SPT (N value) is the sum of the last two blow values in each sampling zone (AASHTO T206)
BBS, from 137 (Rev. 8-99)

Z:\PROJECTS\2010\10025 BENESCH, L-171 FIRST AVE. (IDOT PTB 154, ITEM 14)\10025 BORING LOGS\10025_LOG.GPJ 6/7/13

benesch
engineers · scientists · planners
Alfred Benesch & Company
205 North Michigan Avenue, Suite 2400
Chicago, Illinois 60601
312-565-0450 Job No. 10093

FILE NAME = 016-0488-60J16-035-Soil Boring Logs 5 of 6.dgn	USER NAME = tjanicke	DESIGNED - CMK	REVISED -
		CHECKED - JAW	REVISED -
	PLOT SCALE =	DRAWN - CMK	REVISED -
	PLOT DATE = 12/20/2013	CHECKED - JAW	REVISED -

STATE OF ILLINOIS
DEPARTMENT OF TRANSPORTATION

BORING LOGS (5 OF 6)
STRUCTURE NO. 016-0488

SHEET NO. SH35 OF SH36 SHEETS

F.A.P. RTE.	SECTION	COUNTY	TOTAL SHEETS	SHEET NO.
373	2013-038B-R	COOK	821	773
		CONTRACT NO. 60J16		
		ILLINOIS FED. AID PROJECT		

X:\10000S\10093\Eng_Docs_Phase_II\SN_016_0488_0489_1st_Ave_over_ICC_RR\Final\Final 0488\016-0488-60J16-035-Soil Boring Logs 5 of 6.dgn
3:02:47 PM
6/23/2014

Geo Services, Inc.
Geotechnical, Environmental & Civil Engineering
805 Ammeraal Court, Suite 204
Naperville, Illinois 60565
(630) 355-2838

ROCK CORE LOG

PAGE 1 of 1
DATE 1/11/2013
LOGGED BY DR
GSI JOB No. 10025

FAP Rte. 373 (IL 171)
DESCRIPTION 1st Ave. Bridge Rehabilitation & Replacement, 47th St. to 55th St.
SECTION 2013-038B-R
LOCATION SEC 11, 12, 13 & 14 T 38 N, R 12 E, 3rd PM
COUNTY Cook
CORING METHOD Rotary Wash
STRUCT. NO. 016-0488
Station 22+90.24
CORING BARREL TYPE & SIZE NX Double Swivel-10 ft
Core Diameter 2.0 in
Top of Rock Elev. 544.5
Begin Core Elev. 544.0
BORING NO. SB-65
Station 24+24
Offset 60.0' Left
Ground Surface Elev. 627.5

DEPTH (ft)	CORE (#)	RECOVERY (%)	R.Q.D. (%)	CORE TIME (min/ft)	STRENGTH (tsf)
	1	95.0	83.0	n/a	1003 @ -83.7
-88.5					
-93.5					

SILURIAN SYSTEM, NIAGARAN SERIES DOLOMITE
RUN 1 (-83.5' to -93.5')
Light gray becoming mottled gray @ -85.3'. Fine grained with horizontal bedding.
Horizontal fractures @ -84.4', -84.9', -85.3', -86.2', -86.9', -87.5', -87.7', -88.2', -89.1', -89.3', -89.7', -91.6', -62.1' & -92.5'.

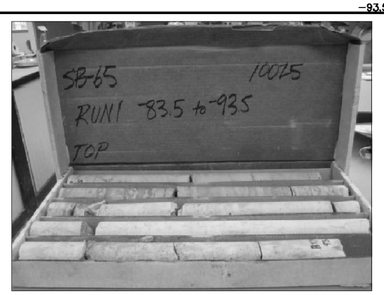

Color pictures of the cores Yes Cores will be stored for examination for —
The "Strength" column represents the uniaxial compressive strength of the core sample (ASTM D-2938)

benesch
engineers · scientists · planners
Alfred Benesch & Company
205 North Michigan Avenue, Suite 2400
Chicago, Illinois 60601
312-565-0450 Job No. 10093

FILE NAME = 016-0488-60J16-036-Soil Boring Logs 6 of 6.dgn	USER NAME = tjanicke	DESIGNED - CMK	REVISED -	STATE OF ILLINOIS DEPARTMENT OF TRANSPORTATION	BORING LOGS (6 OF 6) STRUCTURE NO. 016-0488	F.A.P. RTE. 373	SECTION 2013-038B-R	COUNTY COOK / TOTAL SHEETS 821 / SHEET NO. 774
		CHECKED - JAW	REVISED -					
	PLOT SCALE = 50:1	DRAWN - CMK	REVISED -					CONTRACT NO. 60J16
	PLOT DATE = 12/20/2013	CHECKED - JAW	REVISED -		SHEET NO. SH36 OF SH36 SHEETS		ILLINOIS FED. AID PROJECT	

6/23/2014 3:02:53 PM X:\10000S\10093\Eng_Docs_Phase_II\SN_016_0488_0489_1st_Ave_over_ICC_RR\Final 0488\016-0488-60J16-036-Soil Boring Logs 6 of 6.dgn

F.A. RTE	SECTION	EXPRESSWAYS	TOTAL SHEETS	SHEET NO.
133	C707-617 VB	SOUTHWEST	56	28
STA.		TO STA.		
FED. ROAD DIST. NO. 7	ILLINOIS	FED. AID PROJECT-US 3A392		

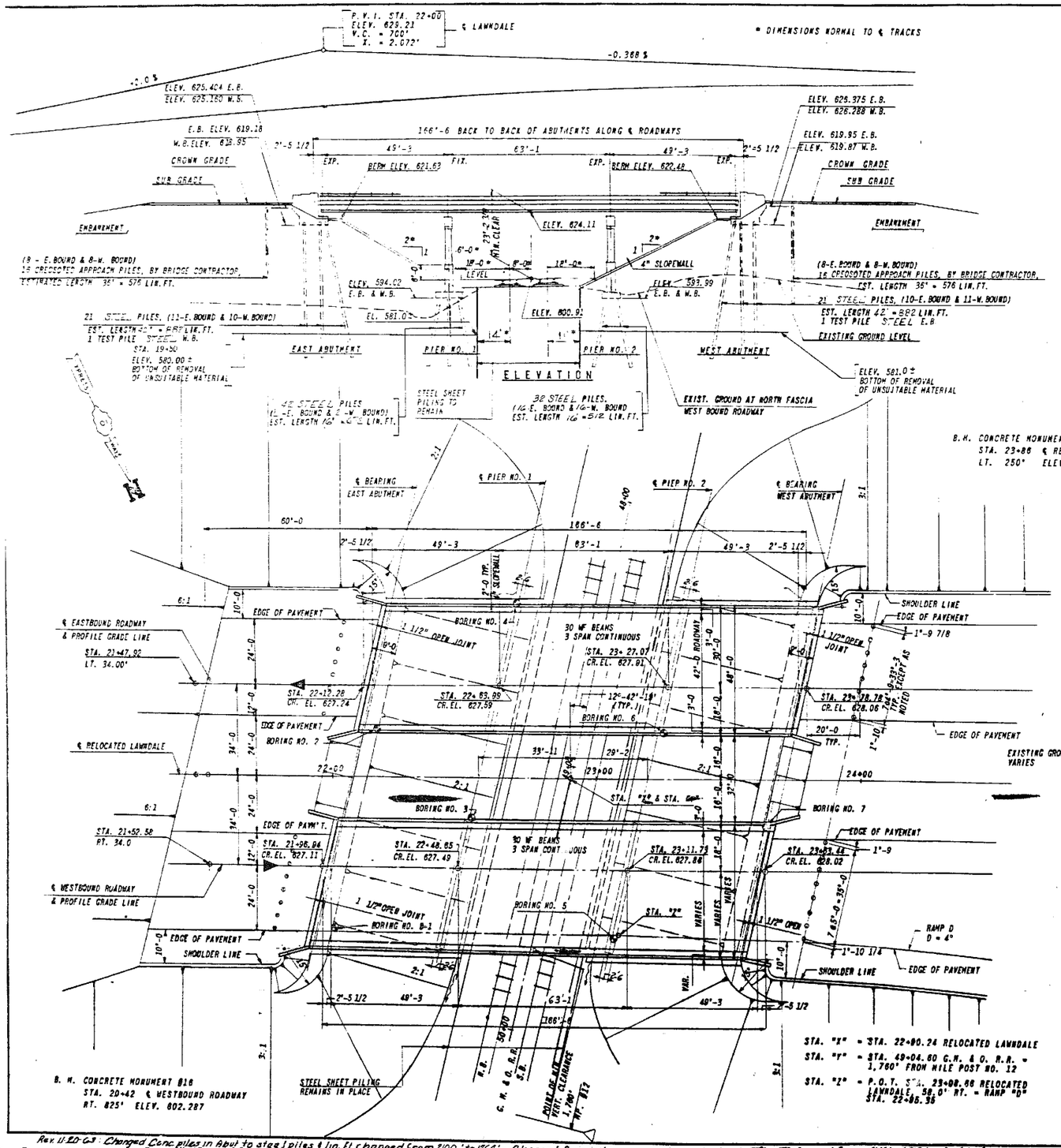

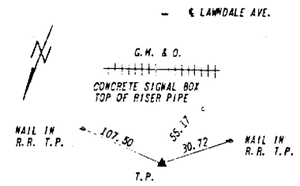

P.O.T. 23+48.84 LAWNDALE AVE.

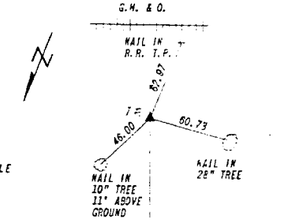

OLD P.I. 24+01.68 LAWNDALE AVE. ℄

DESIGN DATA

DESIGN SPECIFICATION: SEE NOTE BELOW
DESIGN LOAD: H20-S16-44
SUPERSTRUCTURE, SUBSTRUCTURE AND ABUTMENTS:
STRUCTURAL STEEL.

A.S.T.M. A36	fs = 20,000 psi
REINFORCING STEEL (INTERMEDIATE AND HARD GRADE)	fs = 20,000 psi
CONCRETE:	
ULTIMATE COMPRESSION.	f'c = 3,500 psi
ALLOWABLE COMPRESSION (WITHOUT EARTH PRESSURE).	fc = 1,400 psi
ALLOWABLE COMPRESSION (WITH EARTH PRESSURE)	fc = 1,000 psi
MODULAR RATIO	n = 10
ALLOWABLE SHEAR; BEAMS WITHOUT WEB REINFORCEMENT	
LONGITUDINAL BARS ANCHORED	u = 90 psi
PIER FOOTINGS.	u = 75 psi
EARTH PRESSURE:	
HORIZONTAL EARTH PRESSURE = EQUIV. FLUID PRESSURE.	40 p/cf
PILES:	
"STEEL" PILE CAPACITY (10-BP42).	37 TONS
TIMBER PILE CAPACITY: @ APPROACH ROADWAY.	15 T S
MAX. ALLOWABLE LIVE LOAD DEFLECTION, NON-COMPOSITE.	1/1000 SPAN

NOTE:

DESIGN SPECIFICATIONS:

AMERICAN ASSOCIATION OF STATE HIGHWAY OFFICIALS STANDARD SPECIFICATIONS FOR HIGHWAY BRIDGES, 8TH EDITION, DATED 1961 AND THE LATEST EDITION OF THE AMERICAN WELDING SOCIETY STANDARD SPECIFICATIONS FOR WELDED HIGHWAY AND RAILWAY BRIDGES.

CONSTRUCTION SPECIFICATIONS:

STANDARD SPECIFICATIONS FOR ROAD AND BRIDGE CONSTRUCTION, STATE OF ILLINOIS, DEPARTMENT OF PUBLIC WORKS AND BUILDINGS, DIVISION OF HIGHWAYS, EFFECTIVE APRIL 2, 1958 AND SUPPLEMENTAL SPECIFICATIONS EFFECTIVE APRIL 2, 1962.

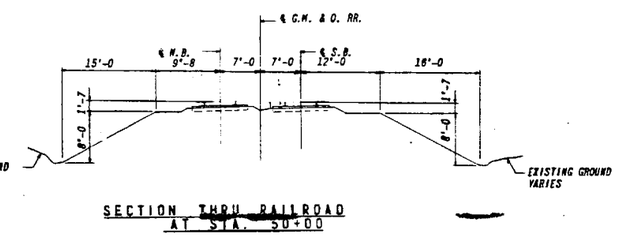

SECTION THRU RAILROAD AT STA. 50+00

FOR INFORMATION ONLY

REVISIONS	
NAME	DATE
DESIGNED ST.	
REVIEWED CWW	

ILLINOIS DIVISION OF HIGHWAYS.
SOUTHWEST EXPRESSWAY
F.A. RT. 133
LAWNDALE AVE. STRUCTURE OVER
G.M. & O. RAILROAD
SECTION 0707-617VB
GENERAL PLAN
SCALE: HORIZ. 1" = 20' VERT.
DRAWN BY E.G.
DATE 8-21-63
CHECKED BY L.D.B.

Rev. 11-20-63: Changed Conc. piles in Abut to steel piles & lin. ft. changed from 2100' to 1166' - Changed Creo. piles in piers to steel piles. Lin. ft. changed from 1416' to 672 lin. ft. & lin. ft. in pier #2 changed from 1128' to 512 lin. ft.

benesch
engineers · scientists · planners
Alfred Benesch & Company
205 North Michigan Avenue, Suite 2400
Chicago, Illinois 60601
312-565-0450
Job No. 10093

FILE NAME = 016-0488-60J16-037-Existing Plans 1 of 14.dgn	USER NAME = tjanicke	DESIGNED - CMK	REVISED -
		CHECKED - JAW	REVISED -
	PLOT SCALE =	DRAWN - CMK	REVISED -
	PLOT DATE = 12/20/2013	CHECKED - JAW	REVISED -

STATE OF ILLINOIS
DEPARTMENT OF TRANSPORTATION

EXISTING PLAN INFORMATION (1 OF 14)
STRUCTURE NO. 016-0488
SHEET NO. SHX1 OF SHX14 SHEETS

F.A.P. RTE.	SECTION	COUNTY	TOTAL SHEETS	SHEET NO.
373	2013-038B-R	COOK	821	775
		CONTRACT NO. 60J16		
		ILLINOIS FED. AID PROJECT		

X:\100005\10093\Eng_Docs_Phase_II\SN_016_0488_0489_1st_Ave_over_ICC_RR\Final\Final 0488\016-60J16-037-Existing Plans 1 of 14.dgn 3:02:55 PM 6/23/2014

F.A. RTE.	SECTION	EXPRESSWAYS	TOTAL SHEETS	SHEET NO.
133	0707-617 VB	SOUTHWEST	56	30
STA.		TO STA.		
FED. ROAD DIST. NO. 7	ILLINOIS	FED. AID PROJECT		

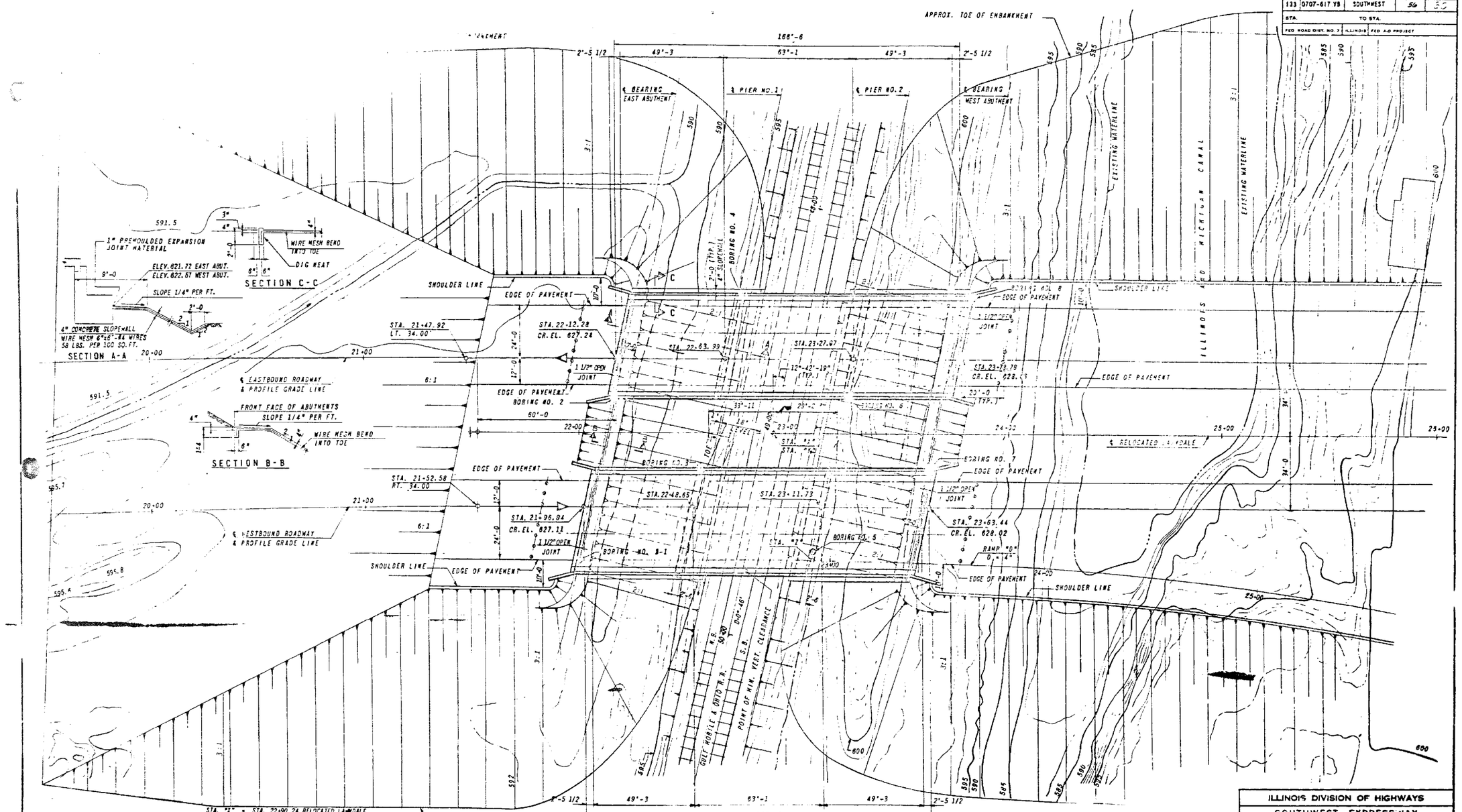

4" SLOPEWALL QUANTITIES			
EAST ABUTMENT	4" SLOPEWALL	SQ. YD.	910
	CLASS A EXCAVATION	CU. YD.	12
WEST ABUTMENT	4" SLOPEWALL	SQ. YD.	942
	CLASS A EXCAVATION	CU. YD.	12

REVISIONS	
NAME	DATE
DESIGNED ST.	
REVIEWED CWW	

ILLINOIS DIVISION OF HIGHWAYS
SOUTHWEST EXPRESSWAY
F.A. RT. 133
LAWNDALE AVE. STRUCTURE OVER
G.M. & O. RAILROAD
SECTION 0707-617VB
LIMIT OF EMBANKMENTS
SCALE: HORIZ. 1" = 20' VERT.
DATE 8-21-63
DRAWN BY
CHECKED BY

benesch
engineers · scientists · planners
Alfred Benesch & Company
205 North Michigan Avenue, Suite 2400
Chicago, Illinois 60601
312-565-0450 Job No. 10093

FOR INFORMATION ONLY

FILE NAME =	USER NAME = tjanicke	DESIGNED - CMK	REVISED -
		CHECKED - JAW	REVISED -
016-0488-60J16-038-Existing Plans 2 of 14.dgn	PLOT SCALE =	DRAWN - CMK	REVISED -
	PLOT DATE = 12/20/2013	CHECKED - JAW	REVISED -

STATE OF ILLINOIS
DEPARTMENT OF TRANSPORTATION

EXISTING PLAN INFORMATION (2 OF 14)
STRUCTURE NO. 016-0488
SHEET NO. SHX2 OF SHX14 SHEETS

F.A.P. RTE.	SECTION	COUNTY	TOTAL SHEETS	SHEET NO.
373	2013-038B-R	COOK	821	776
		CONTRACT NO. 60J16		
		ILLINOIS FED. AID PROJECT		

X:\100005\10093\Eng_Docs_Phase_II\SN_016_0488_0489_1st_Ave_over_ICC_RR\Final 0488\016-60J16-038-Existing Plans 2 of 14.dgn 3:03:03 PM 6/23/2014

F.A. RTE.	SECTION	EXPRESSWAY	TOTAL SHEETS	SHEET NO.
133	0707-617VB	SOUTHWEST	36	33
STA.		TO STA.		

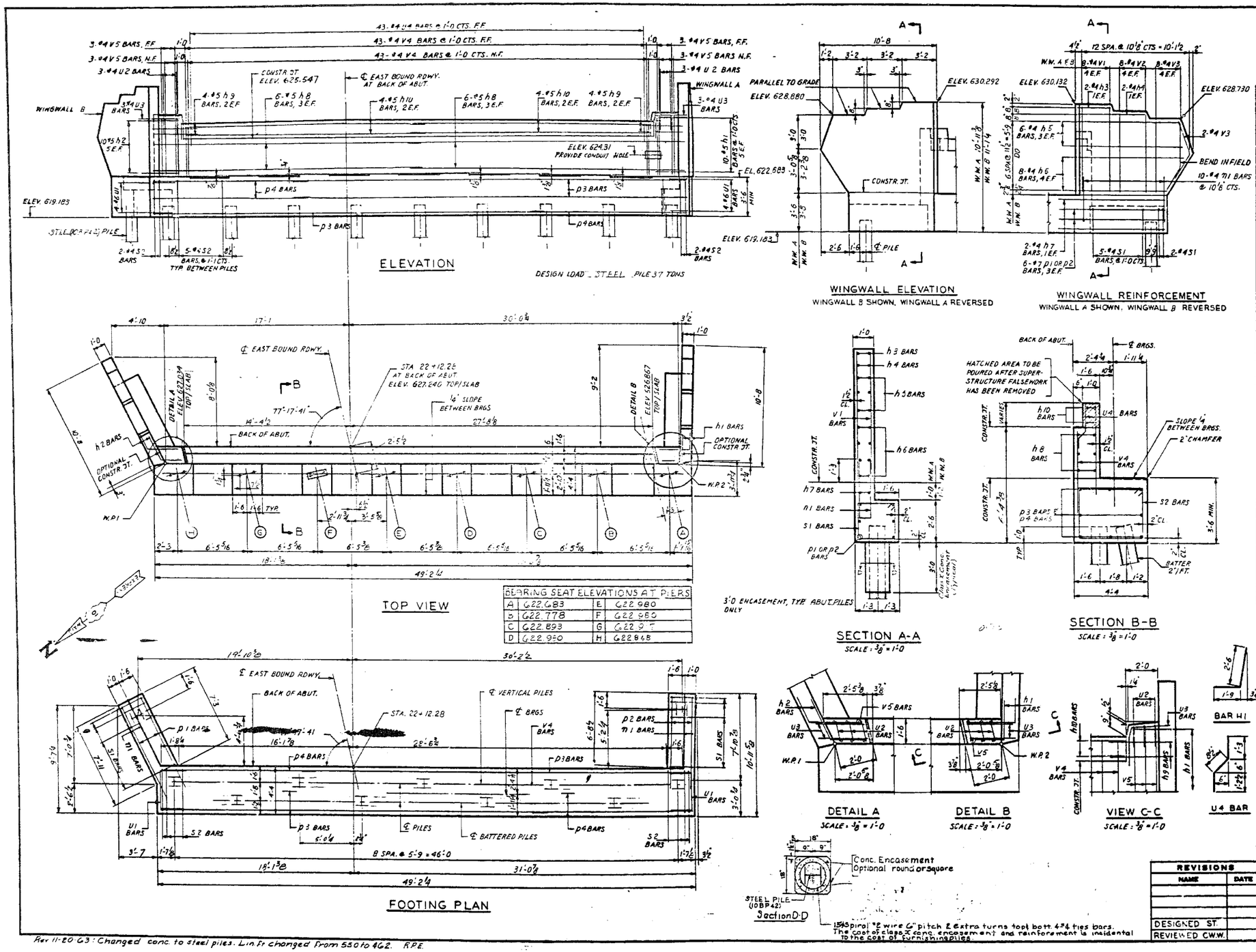

BEARING SEAT ELEVATIONS AT PIERS			
A	622.683	E	622.980
B	622.778	F	622.980
C	622.893	G	622.9[illegible]
D	622.950	H	622.848

BILL OF REINFORCEMENT

BAR	NO.	SIZE	LENGTH	SHAPE
h1	10	5	4'-3	
h2	10	5	4'-6	
h3	4	4	2'-8	
h4	4	4	5'-10	
h5	12	4	9'-0	
h6	16	4	10'-2	
h7	4	4	8'-0	
h8	12	5	25'-3	
h9	8	5	3'-0	
h10	8	5	22'-0	
* n1	20	4	8'-1	
p1	6	7	8'-9	
p2	6	7	8'-3	
p3	8	7	36'-0	
p4	8	7	14'-5	
U1	8	6	8'-11	
U2	6	4	4'-3	
U3	6	4	5'-0	
U4	43	4	3'-2	
S1	14	4	9'-5	
S2	44	4	15'-1	
V1	16	4	7'-3	
V2	16	4	6'-7	
V3	20	4	5'-11	
V4	86	4	5'-3	
V5	12	4	6'-0	

EAST ABUTMENT E.B. QUANTITIES		
CLASS X CONCRETE	CU. YDS.	47.8
REINFORCING BARS	LBS.	3,330
STEEL (10BP42) PILES	LIN. FT.	462

11 STEEL PILES AT 42' = 462

Rev 11-20-03: Changed conc. to steel piles. Lin. ft changed from 550 to 462. R.P.E.

REVISIONS	
NAME	DATE
DESIGNED ST.	
REVIEWED CWW.	

ILLINOIS DIVISION OF HIGHWAYS
SOUTHWEST EXPRESSWAY
F.A. RT. 133
LAWNDALE AVE. STRUCTURE OVER
G. M. & O. RAILROAD
SECTION 0707-617VB
EAST ABUTMENT EAST BOUND
SCALE: HORIZ. 1/4" = 1'-0 VERT. EXCEPT AS NOTED
DATE 8-21-03
DRAWN BY J. W.
CHECKED BY L.D.L.

benesch
engineers · scientists · planners
Alfred Benesch & Company
205 North Michigan Avenue, Suite 2400
Chicago, Illinois 60601
312-565-0450 Job No. 10093

FOR INFORMATION ONLY

FILE NAME =	USER NAME = tjanicke	DESIGNED - CMK	REVISED -
		CHECKED - JAW	REVISED -
016-0488-60J16-039-Existing Plans 3 of 14.dgn	DGN SCALE =	DRAWN - CMK	REVISED -
	PLOT DATE = 12/20/2013	CHECKED - JAW	REVISED -

STATE OF ILLINOIS
DEPARTMENT OF TRANSPORTATION

EXISTING PLAN INFORMATION (3 of 14)
STRUCTURE NO. 016-0488
SHEET NO. SHX3 OF SHX14 SHEETS

F.A.P. RTE.	SECTION	COUNTY	TOTAL SHEETS	SHEET NO.
373	2013-038B-R	COOK	821	777
		CONTRACT NO. 60J16		
		ILLINOIS FED. AID PROJECT		

X:\10000S\10093\Eng_Docs_Phase_II\SN_016_0488_0489_1st_Ave_over_ICC_RR\Final\0488\016-60J16-039-Existing Plans 3 of 14.dgn 3:03:04 PM 6/23/2014

F.A. RTE.	SECTION	EXPRESSWAYS	TOTAL SHEETS	SHEET NO.
133	0707-617VB	SOUTHWEST	56	35
STA.		TO STA.		
FED. ROAD DIST. NO. 7	ILLINOIS	FED. AID PROJECT		

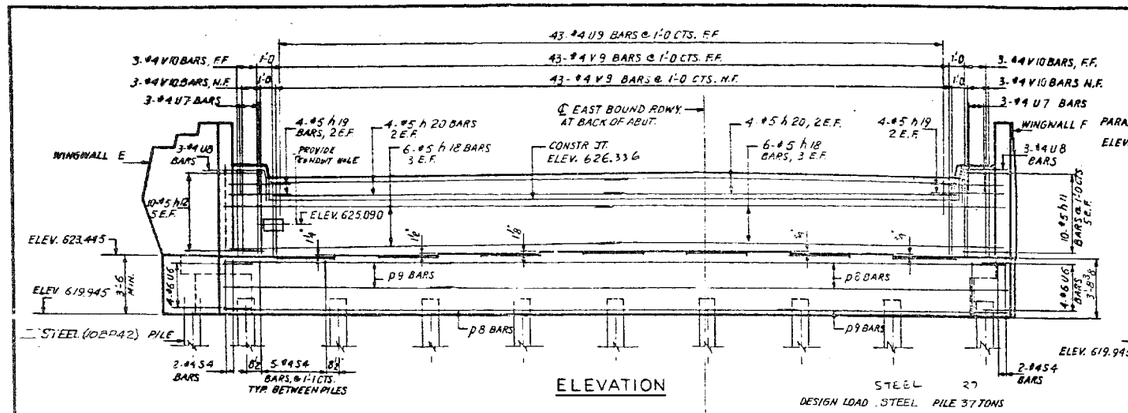

ELEVATION

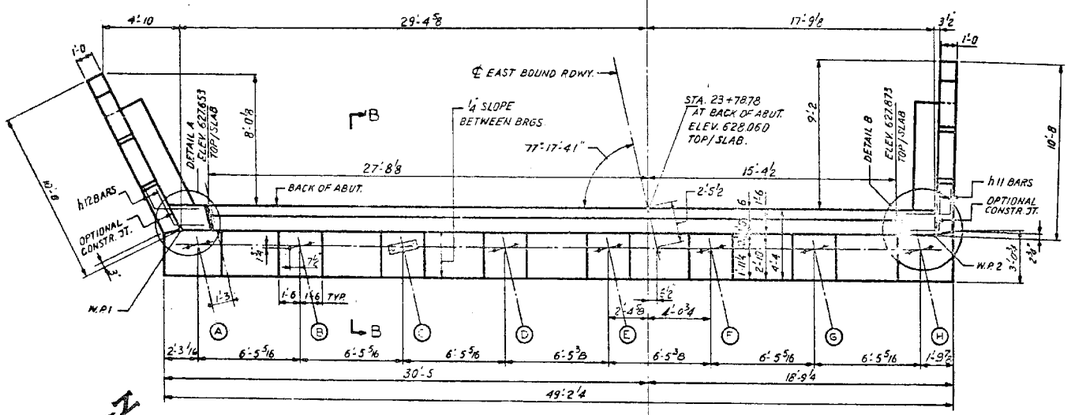

TOP VIEW

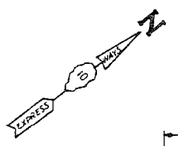

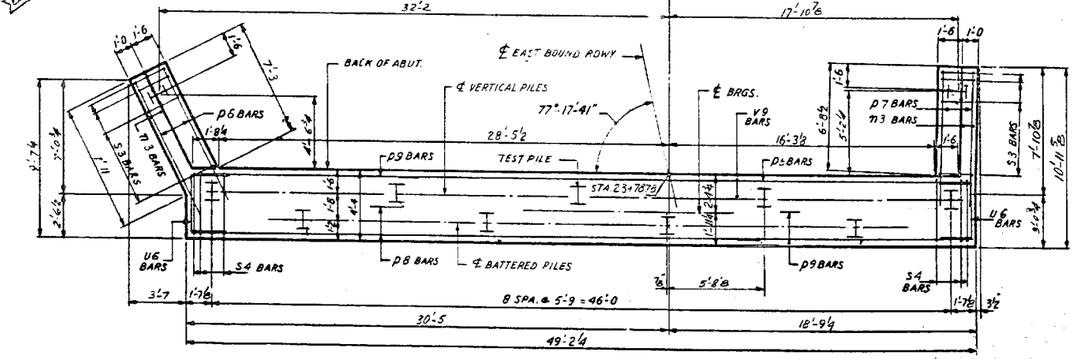

FOOTING PLAN

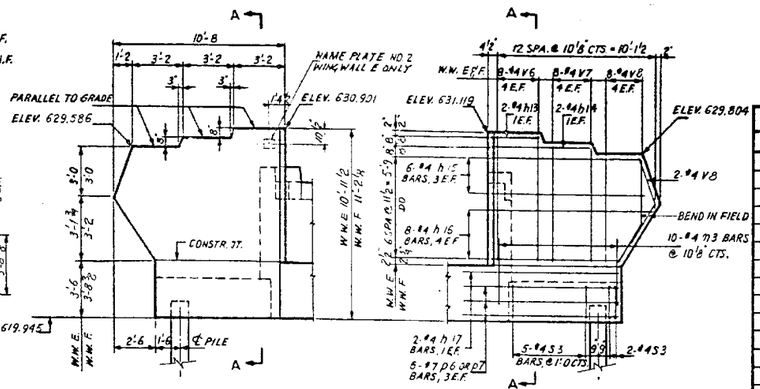

WINGWALL ELEVATION

WINGWALL E SHOWN, WINGWALL F REVERSED

WINGWALL REINFORCEMENT

WINGWALL F SHOWN, WINGWALL E REVERSED

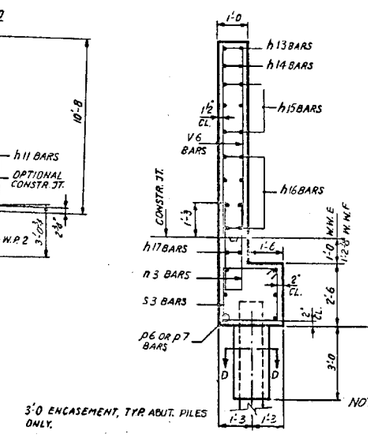

SECTION A-A

SCALE: 3/8" = 1'-0

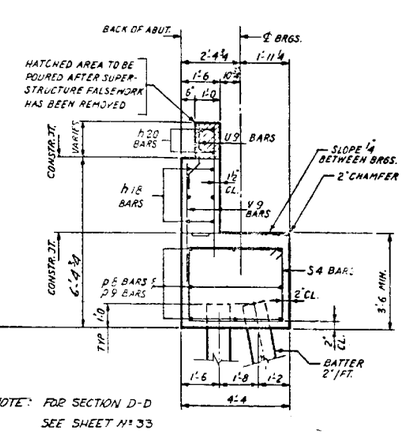

SECTION B-B

SCALE: 3/8" = 1'-0

BILL OF REINFORCEMENT				
BAR	NO.	SIZE	LENGTH	SHAPE
h11	10	5	4'-3	
h12	10	5	4'-6	
h13	4	4	2'-8	
h14	4	4	5'-10	
h15	12	4	9'-0	
h16	16	4	10'-2	
h17	4	4	8'-0	
h18	12	5	25'-3	
h19	8	5	3'-0	
h20	8	5	22'-0	
n3	20	4	8'-1	
p6	6	7	8'-9	
p7	6	7	8'-3	
p8	8	7	36'-0	
p9	8	7	14'-5	
U6	8	6	8'-11	
U7	6	4	4'-3	
U8	[illegible]	4	5'-0	
U9	43	4	3'-2	
S3	14	4	9'-5	
S4	44	4	15'-1	
V6	16	4	7'-3	
V7	16	4	6'-7	
V8	20	4	5'-11	
V9	86	4	5'-3	
V10	12	4	6'-0	

WEST ABUTMENT E.B. QUANTITIES		
CLASS X CONCRETE	CU. YDS.	478
REINFORCING BARS	LBS	3,330
STEEL PILES	LIN. FT.	420
TEST PILE STEEL	EACH	1

10 STEEL PILES AT 42' = 420 (10BP42)
1 TEST PILE STEEL (10BP42)

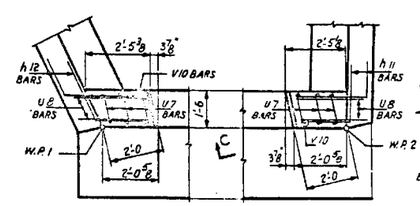

DETAIL A

SCALE: 3/8" = 1'-0

DETAIL B

SCALE: 3/8" = 1'-0

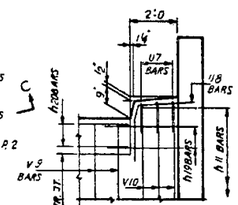

VIEW C-C

SCALE: 3/8" = 1'-0

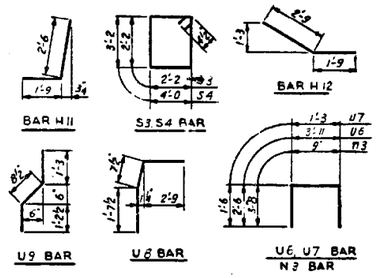

BEARING SEAT ELEVATIONS AT BEAMS			
A	623.445	E	623.764
B	623.547	F	623.764
C	623.670	G	623.701
D	623.764	H	623.639

REVISIONS	
NAME	DATE
DESIGNED ST.	
REVIEWED C.W.W.	

ILLINOIS DIVISION OF HIGHWAYS

SOUTHWEST EXPRESSWAY

F.A. RT. 133
LAWNDALE AVE. STRUCTURE OVER
G. M. & O. RAILROAD
SECTION 0707-617VB
WEST ABUTMENT EAST BOUND

SCALE: HORIZ. 1/4" = 1'-0 VERT. EXCEPT AS NOTED
DATE 8-21-63
DRAWN BY J. W.
CHECKED BY L.D.B.

Revised piles from concrete to steel H (10BP42), quantity changed from 500 lin.ft. (Conc.) to 420 lin.ft. (Steel) 11-19-63 L.D.W.

benesch
engineers · scientists · planners
Alfred Benesch & Company
205 North Michigan Avenue, Suite 2400
Chicago, Illinois 60601
312-565-0450 Job No. 10093

FOR INFORMATION ONLY

FILE NAME = 016-0488B-60J16-040-Existing Plans 4 of 14.dgn	USER NAME = tjanicke	DESIGNED - CMK	REVISED -
		CHECKED - JAW	REVISED -
	PLOT SCALE =	DRAWN - CMK	REVISED -
	PLOT DATE = 12/20/2013	CHECKED - JAW	REVISED -

STATE OF ILLINOIS
DEPARTMENT OF TRANSPORTATION

EXISTING PLAN INFORMATION (4 OF 14)
STRUCTURE NO. 016-0488
SHEET NO. SHX4 OF SHX14 SHEETS

F.A.P. RTE.	SECTION	COUNTY	TOTAL SHEETS	SHEET NO.
373	2013-038B-R	COOK	821	778
		CONTRACT NO. 60J16		
		ILLINOIS	FED. AID PROJECT	

X:\100005\10093\Eng_Docs_Phase_II\SN_016_0488_0489_1st_Ave_over_ICC_RR\Final\0488\016-0488-60J16-040-Existing Plans 4 of 14.dgn 3:03:06 PM 6/23/2014

F.A. RTE.	SECTION	EXPRESSWAYS	TOTAL SHEETS	SHEET NO.
133	0707-617VB	SOUTHWEST	56	37
STA.		TO STA.		
FED. ROAD DIST. NO. 7	ILLINOIS	FED. AID PROJECT		

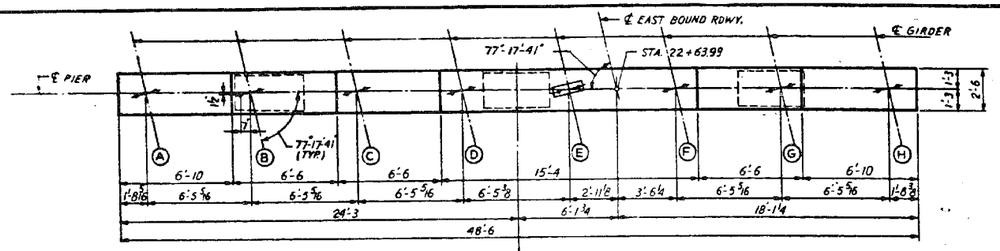

CAP PLAN

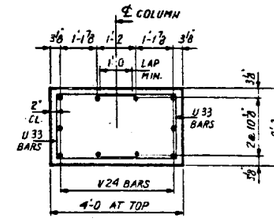

SECTION D-D

SCALE : ½" = 1'-0

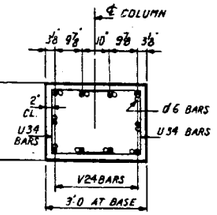

SECTION E-E

SCALE : ½" = 1'-0

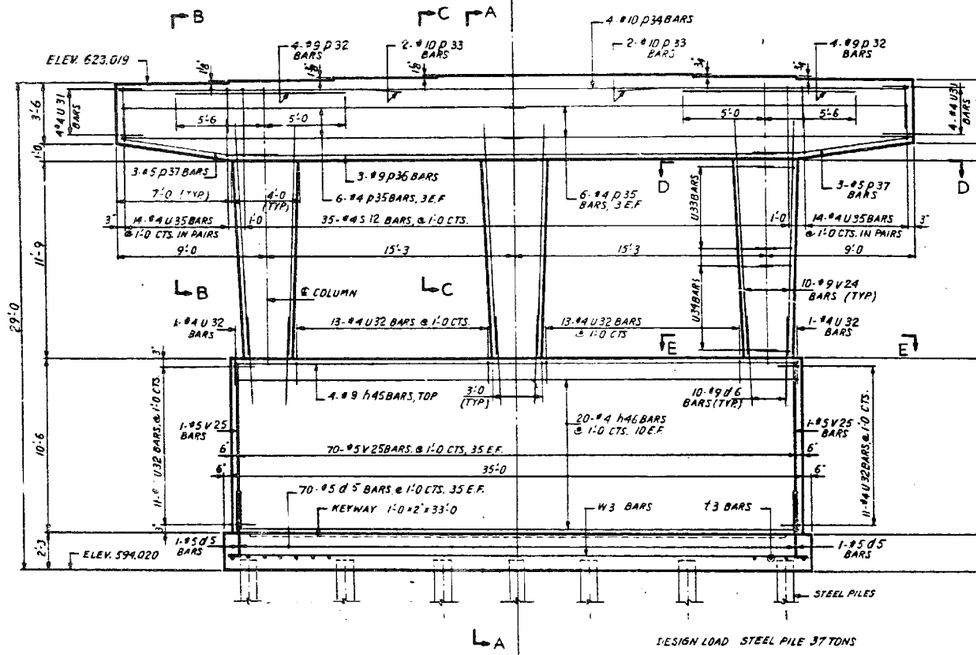

ELEVATION

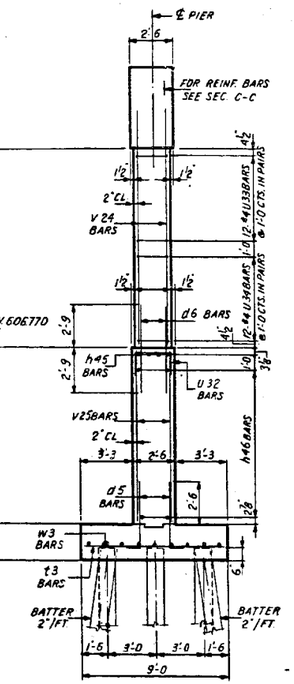

SECTION A-A

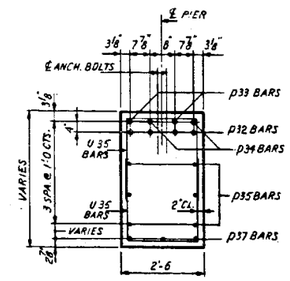

SECTION B-B

SCALE : ½" = 1'-0

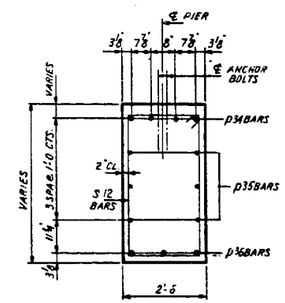

SECTION C-C

SCALE : ½" = 1'-0

BILL OF REINFORCEMENT				
BAR	NO.	SIZE	LENGTH	SHAPE
d5	72	5	5'-0	
d6	30	9	5'-6	
h45	4	9	34'-8	
h46	20	4	34'-8	
p32	8	9	10'-6	
p33	4	10	17'-9	
p34	4	10	32'-7	
p35	12	4	24'-7	
p36	3	9	32'-6	
p37	6	5	9'-4	
S12	35	4	13'-5	
t3	43	7	6'-8	
U31	8	4	4'-1	
U32	50	4	4'-2	
U33	36	4	6'-7	
U34	36	4	6'-1	
U35	28	4	7'-4	
V24	30	9	14'-6	
V25	72	5	10'-2	
W3	9	6	35'-8	

PIER NO. 1 E.B. QUANTITIES		
CLASS X CONCRETE	CU. YDS.	91.7
REINFORCEMENT BARS	LBS.	7,900
STEEL PILES (10BP42)	LIN. FT.	936

21 (10BP42) STEEL PILES AT 16" = 336'

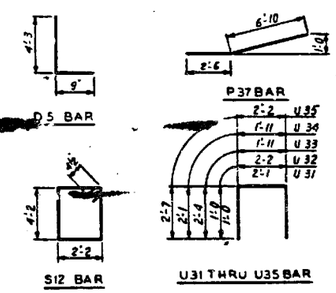

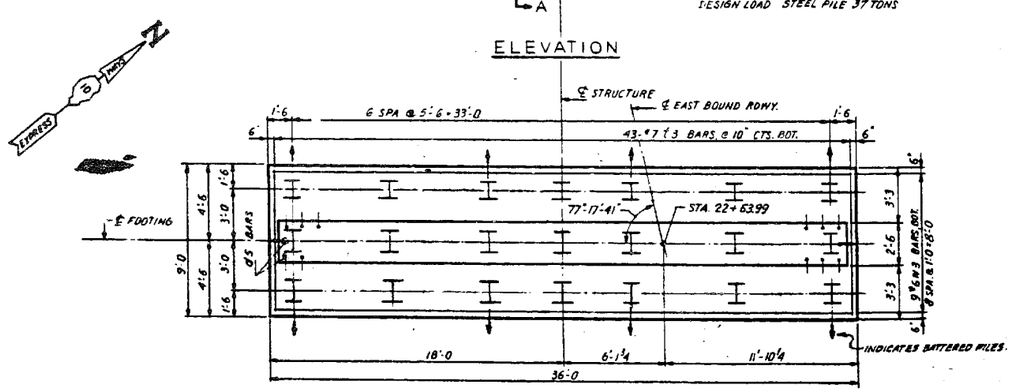

FOOTING PLAN

BEARING SEAT ELEVATIONS AT BEAMS			
A	623.019	E	623.323
B	623.117	F	623.323
C	623.234	G	623.260
D	623.323	H	623.200

REVISIONS	
NAME	DATE
DESIGNED P.K.ST.	
REVIEWED C.W.W.	

ILLINOIS DIVISION OF HIGHWAYS

SOUTHWEST EXPRESSWAY

F.A. RT. 133
LAWNDALE AVE. STRUCTURE OVER
G. M. & O. RAILROAD
SECTION 0707-617VB
PIER NO. 1 EAST BOUND

SCALE: HORIZ. VERT. 4"=1'-0 EXCEPT AS NOTED
DRAWN BY J. W.
DATE 8-21-63
CHECKED BY L.D.B.

Rev. 11-19-63: Creo. Timber Piles changed to Steel Piles. Lin. ft. of piles changed from 696 to 336.

benesch
engineers · scientists · planners
Alfred Benesch & Company
205 North Michigan Avenue, Suite 2400
Chicago, Illinois 60601
312-565-0450 Job No. 10093

FOR INFORMATION ONLY

FILE NAME = 016-0488-60J16-041-Existing Plans 5 of 14.dgn	USER NAME = tjanicke	DESIGNED - CMK	REVISED -
	PLOT SCALE =	CHECKED - JAW	REVISED -
	PLOT DATE = 12/20/2013	DRAWN - CMK	REVISED -
		CHECKED - JAW	REVISED -

STATE OF ILLINOIS
DEPARTMENT OF TRANSPORTATION

EXISTING PLAN INFORMATION (5 OF 14)
STRUCTURE NO. 016-0488

SHEET NO. SHX5 OF SHX14 SHEETS

F.A.P. RTE.	SECTION	COUNTY	TOTAL SHEETS	SHEET NO.
373	2013-038B-R	COOK	821	779
		CONTRACT NO. 60J16		
		ILLINOIS FED. AID PROJECT		

6/23/2014 3:03:07 PM X:\100005\10093\Eng_Docs_Phase_II\SN_016_0488_0489_1st_Ave_over_ICC_RR\Final\0488\016-0488-60J16-041-Existing Plans 5 of 14.dgn

F.A. RTE.	SECTION	EXPRESSWAYS	TOTAL SHEETS	SHEET NO.
133	0707-617VB	SOUTHWEST	56	39
STA.		TO STA.		
FED. ROAD DIST. NO. 7	ILLINOIS	FED. AID PROJECT		

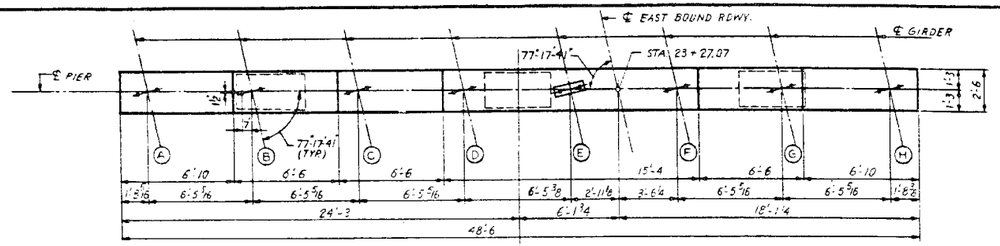

CAP PLAN

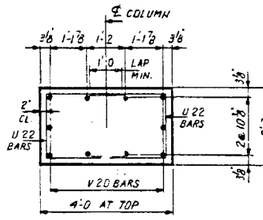

SECTION D-D

SCALE: 1/2" = 1'-0

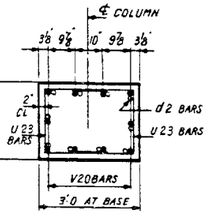

SECTION E-E

SCALE: 1/2" = 1'-0

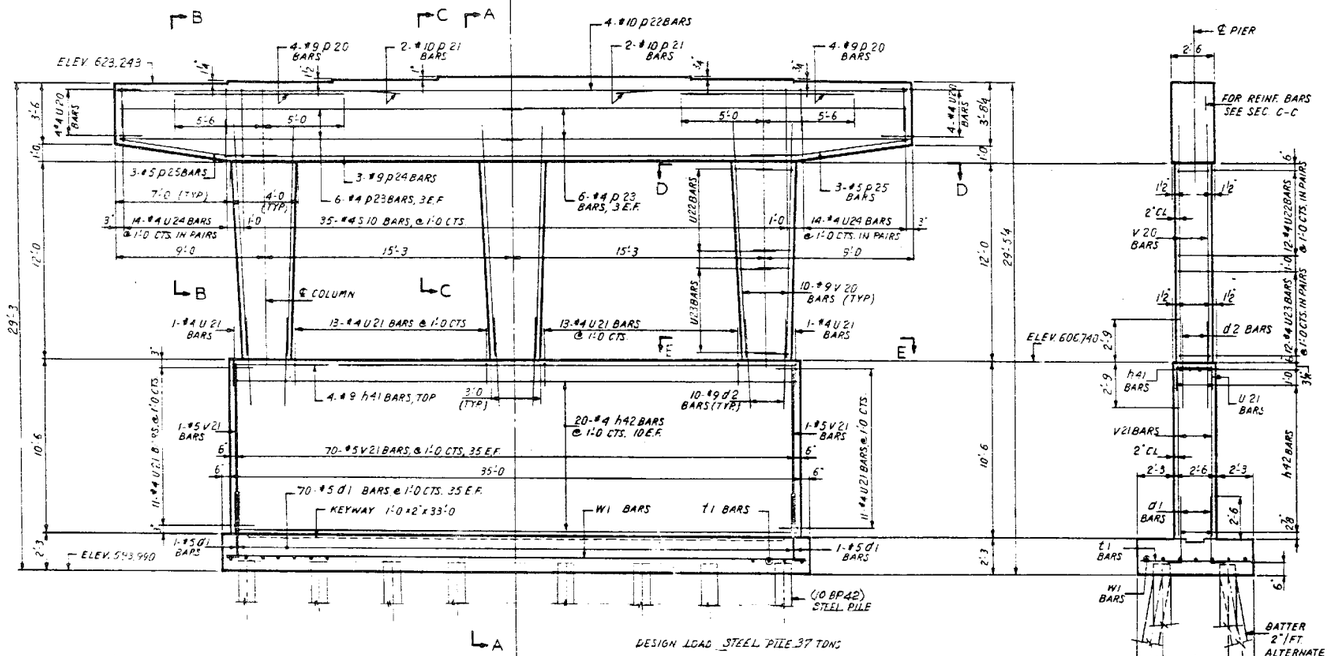

ELEVATION

SECTION A-A

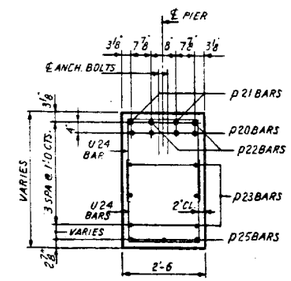

SECTION B-B

SCALE: 1/2" = 1'-0

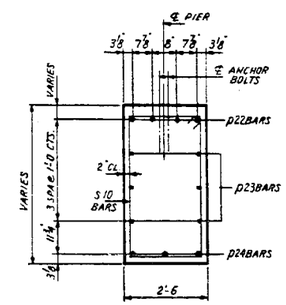

SECTION C-C

SCALE: 1/2" = 1'-0

BILL OF REINFORCEMENT				
BAR	NO.	SIZE	LENGTH	SHAPE
d1	72	5	5'-0	
d2	30	9	5'-6	
h41	4	9	34'-8	
h42	20	4	34'-8	
p20	8	9	10'-6	
p21	4	10	17'-9	
p22	4	10	32'-7	
p23	12	4	24'-7	
p24	3	9	32'-6	
p25	6	5	9'-4	
S10	35	4	13'-5	
t1	36	6	6'-8	
U20	8	4	4'-1	
U21	50	4	4'-2	
U22	36	4	6'-7	
U23	36	4	6'-1	
U24	28	4	7'-4	
V20	30	9	14'-9	
V21	72	5	10'-2	
W1	7	6	35'-8	
PIER NO. 2 E.B. QUANTITIES				
CLASS X CONCRETE		CU YDS.	86.0	
REINFORCEMENT BARS		LBS.	7,540	
STEEL (10BP42) PILES		LIN. FT.	256	

16 STEEL (10BP42) PILES AT 16' = 256'

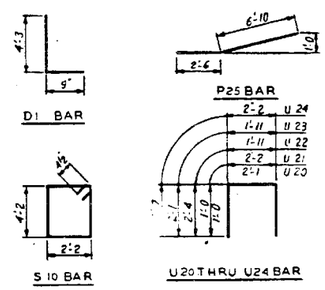

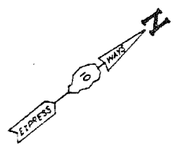

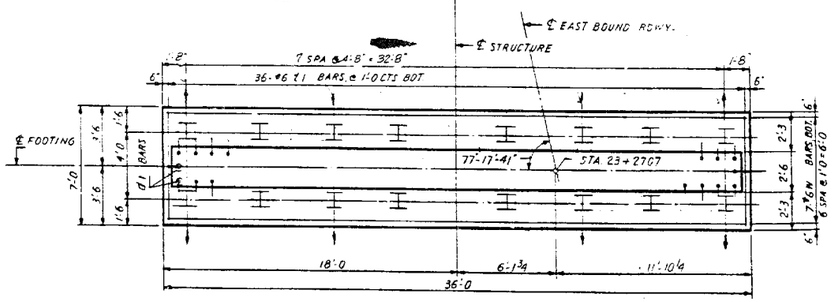

FOOTING PLAN

BEARING SEAT ELEVATIONS AT BEAMS			
A	623.243	E	623.556
B	623.344	F	623.556
C	623.464	G	623.493
D	623.556	H	623.431

REVISIONS	
NAME	DATE
DESIGNED F.X.S.T	
REVIEWED C.W.W	

ILLINOIS DIVISION OF HIGHWAYS

SOUTHWEST EXPRESSWAY

F.A. RT. 133
LAWNDALE AVE. STRUCTURE OVER
G. M. & O. RAILROAD
SECTION 0707-617 VB
PIER NO. 2 EAST BOUND

SCALE: HORIZ. 4" = 1'-0 EXCEPT VERT. AS NOTED
DRAWN BY J.W
DATE 8-21-63
CHECKED BY L.C.B

Rev 11-20-63 Creo piles changed to steel piles. Lin.Ft. changed from 576' to 256'. R.P.E.

FOR INFORMATION ONLY

benesch
engineers · scientists · planners
Alfred Benesch & Company
205 North Michigan Avenue, Suite 2400
Chicago, Illinois 60601
312-565-0450 Job No. 10093

FILE NAME =	USER NAME = tjanicke	DESIGNED - CMK	REVISED -
		CHECKED - JAW	REVISED -
016-0488-60J16-042-Existing Plans 6 of 14.dgn	PLOT SCALE =	DRAWN - CMK	REVISED -
	PLOT DATE = 12/20/2013	CHECKED - JAW	REVISED -

STATE OF ILLINOIS
DEPARTMENT OF TRANSPORTATION

EXISTING PLAN INFORMATION (6 OF 14)
STRUCTURE NO. 016-0488

SHEET NO. SHX6 OF SHX14 SHEETS

F.A.P. RTE.	SECTION	COUNTY	TOTAL SHEETS	SHEET NO.
373	2013-038B-R	COOK	821	780
		CONTRACT NO. 60J16		
		ILLINOIS FED. AID PROJECT		

6/23/2014 3:03:09 PM X:\100005\10093\Eng_Docs_Phase_II\SN_016_0488_0489_1st_Ave_over_ICC_RR\Final\Final 0488\016-60J16-042-Existing Plans 6 of 14.dgn

F.A. RTE.	SECTION	EXPRESSWAYS	TOTAL SHEETS	SHEET NO.
133	0707-617VB	SOUTHWEST	56	41
STA.		TO STA.		
FED. ROAD DIST. NO. 7	ILLINOIS	FED. AID PROJECT		

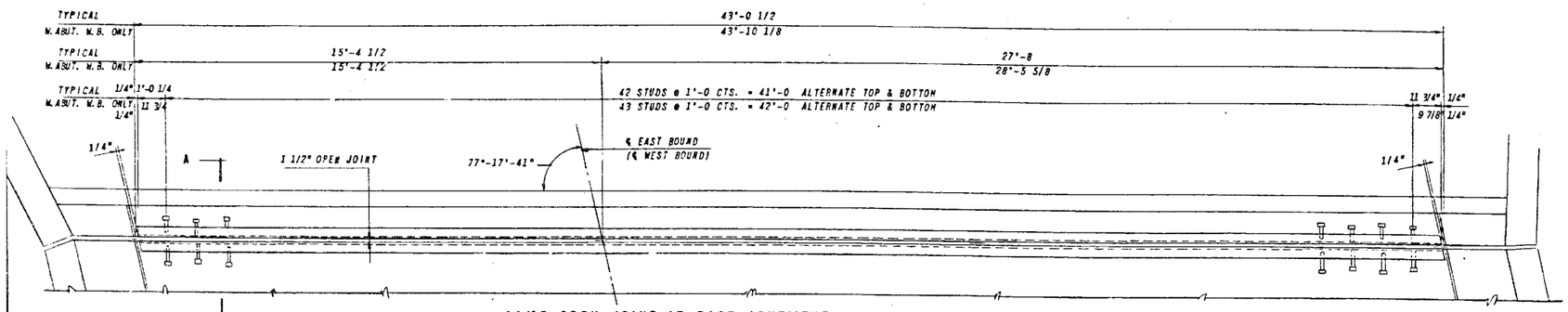

1 1/2" OPEN JOINT AT EAST ABUTMENT - EAST BOUND SHOWN

AT OTHER ABUTMENTS SIMILAR

1 1/2" OPEN JOINT BLOCKING				
LOCATION	a	b	c	d
EAST ABUT. E.B.	2 1/2"	1 11/16"	1 3/16"	4 1/2"
WEST ABUT. E.B.	2 1/4"	1 1/2"	1 3/8"	4 7/8"
EAST ABUT. W.B.	1 13/16"	1 3/16"	1 11/16"	5 5/8"
WEST ABUT. W.B.	2 1/16"	1 3/8"	1 1/2"	5 7/16"

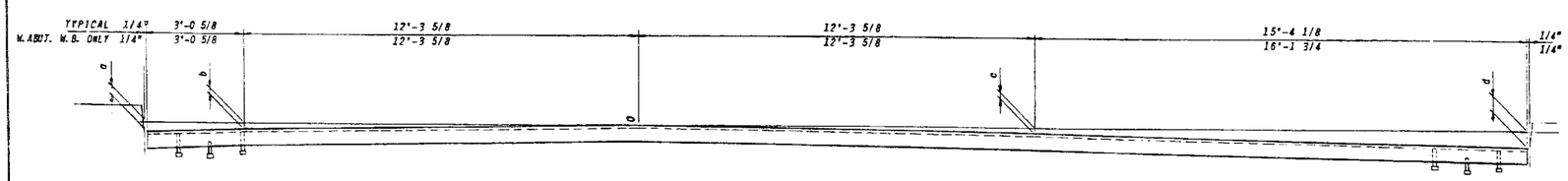

BLOCKING DIAGRAM

SHIM PLATES THICKNESS - EAST BOUND (INCH)								
LOCATION	A	B	C	D	E	F	G	H
EAST ABUT.	–	–	–	–	5/8"	7/16"	5/16"	–
PIER NO. 1	–	–	–	–	5/8"	1/2"	3/8"	–
PIER NO. 2	–	–	–	–	11/16"	9/16"	1/2"	3/16"
WEST ABUT.	–	–	–	–	3/4"	5/8"	9/16"	5/16"

SHIM PLATES THICKNESS - WEST BOUND (INCH)								
LOCATION	I	J	K	L	M	N	O	P
EAST ABUT.	1/8"	3/16"	1/8"	–	–	–	–	–
PIER NO. 1	–	3/16"	1/8"	–	–	–	–	–
PIER NO. 2	–	1/8"	–	–	–	–	–	–
WEST ABUT.	–	–	–	–	–	–	–	–

ANCHOR BOLT PROJECTION - EAST BOUND (INCH)								
LOCATION	A	B	C	D	E	F	G	H
EAST ABUT.	3"	3"	3"	3"	3 5/8"	3 1/2"	3 3/8"	3"
PIER NO. 1	2 3/8"	2 3/8"	2 3/8"	2 3/8"	3"	2 7/8"	2 3/4"	2 3/8"
PIER NO. 2	3 3/8"	3 3/8"	3 3/8"	3 3/8"	4"	4"	3 7/8"	3 5/8"
WEST ABUT.	3"	3"	3"	3"	3 3/4"	3 5/8"	3 5/8"	3 3/8"

ANCHOR BOLT PROJECTION - WEST BOUND (INCH)								
LOCATION	I	J	K	L	M	N	O	P
EAST ABUT.	3 1/8"	3 1/4"	3 1/8"	3"	3"	3"	3"	3"
PIER NO. 1	2 3/8"	2 5/8"	2 1/2"	2 3/8"	2 3/8"	2 3/8"	2 3/8"	2 3/8"
PIER NO. 2	3 3/8"	3 1/2"	3 3/8"	3 3/8"	3 3/8"	3 3/8"	3 3/8"	3 3/8"
WEST ABUT.	3"	3"	3"	3"	3"	3"	3"	3"

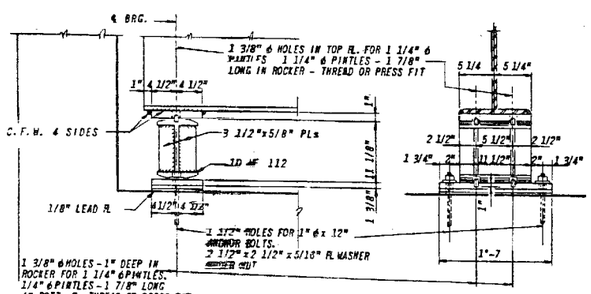

EXPANSION BEARING DETAIL AT ABUTMENTS

32 - REQ'D.

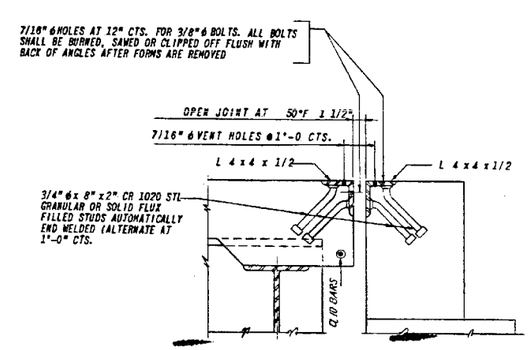

SECTION A-A

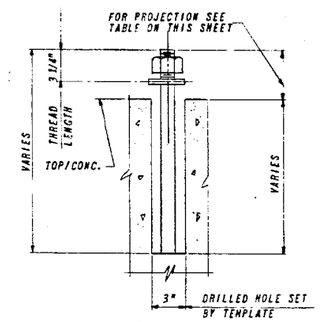

ANCHOR BOLT

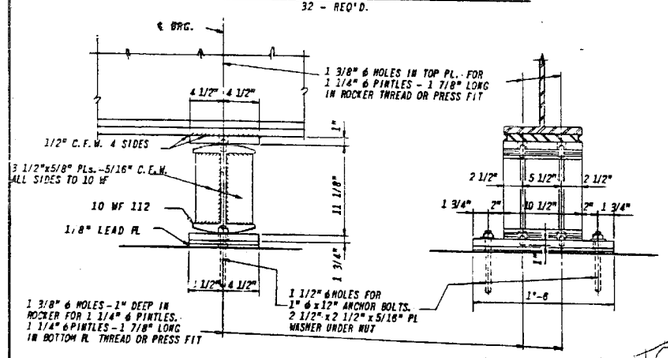

EXPANSION BEARING DETAIL AT PIER NO. 2

16 - REQ'D.

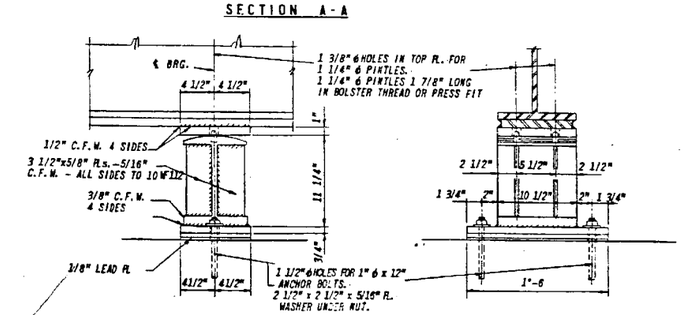

FIXED BEARING DETAIL AT PIER NO. 1

16 - REQ'D.

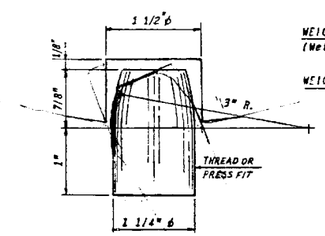

PINTLE DETAIL

WEIGHT OF BEARING DEVICES 15,750 LBS.
(Weight of Shim Plates Included)

WEIGHT OF 1 1/2" OPEN JOINT DEVICES 4,760 LBS.

REVISIONS	
NAME	DATE
DESIGNED ST:PX	
REVIEWED C.W.W.	

ILLINOIS DIVISION OF HIGHWAYS
SOUTHWEST EXPRESSWAY
F.A. RT. 133
LAWNDALE AVE. STRUCTURE OVER
G.M. & O. RAILROAD
SECTION 0707-617 VB
BEARING DEVICES
SCALE: HORIZ. VERT.
DATE 8-21-63
DRAWN BY J.S.
CHECKED BY L.D.B.

FOR INFORMATION ONLY

benesch
engineers · scientists · planners
Alfred Benesch & Company
205 North Michigan Avenue, Suite 2400
Chicago, Illinois 60601
312-565-0450 Job No. 10093

FILE NAME = 016-0488-60J16-043-Existing Plans 7 of 14.dgn	USER NAME = tjanicke	DESIGNED - CMK	REVISED -
		CHECKED - JAW	REVISED -
	PLOT SCALE =	DRAWN - CMK	REVISED -
	PLOT DATE = 12/20/2013	CHECKED - JAW	REVISED -

STATE OF ILLINOIS
DEPARTMENT OF TRANSPORTATION

EXISTING PLAN INFORMATION (7 OF 14)
STRUCTURE NO. 016-0488
SHEET NO. SHX7 OF SHX14 SHEETS

F.A.P. RTE.	SECTION	COUNTY	TOTAL SHEETS	SHEET NO.
373	2013-038B-R	COOK	821	781
		CONTRACT NO. 60J16		
		ILLINOIS FED. AID PROJECT		

X:\100005\10093\Eng_Docs_Phase_II\SN_016_0488_0489_1st_Ave_over_ICC_RR\Final 0488\016-0488-60J16-043-Existing Plans 7 of 14.dgn 3:03:10 PM 6/23/2014

F.A. RTE.	SECTION	EXPRESSWAYS	TOTAL SHEETS	SHEET NO
133	0707-617VB	SOUTHWEST	56	42
STA.		TO STA.		
FED. ROAD DIST. NO. 7	ILLINOIS	FED. AID PROJECT		

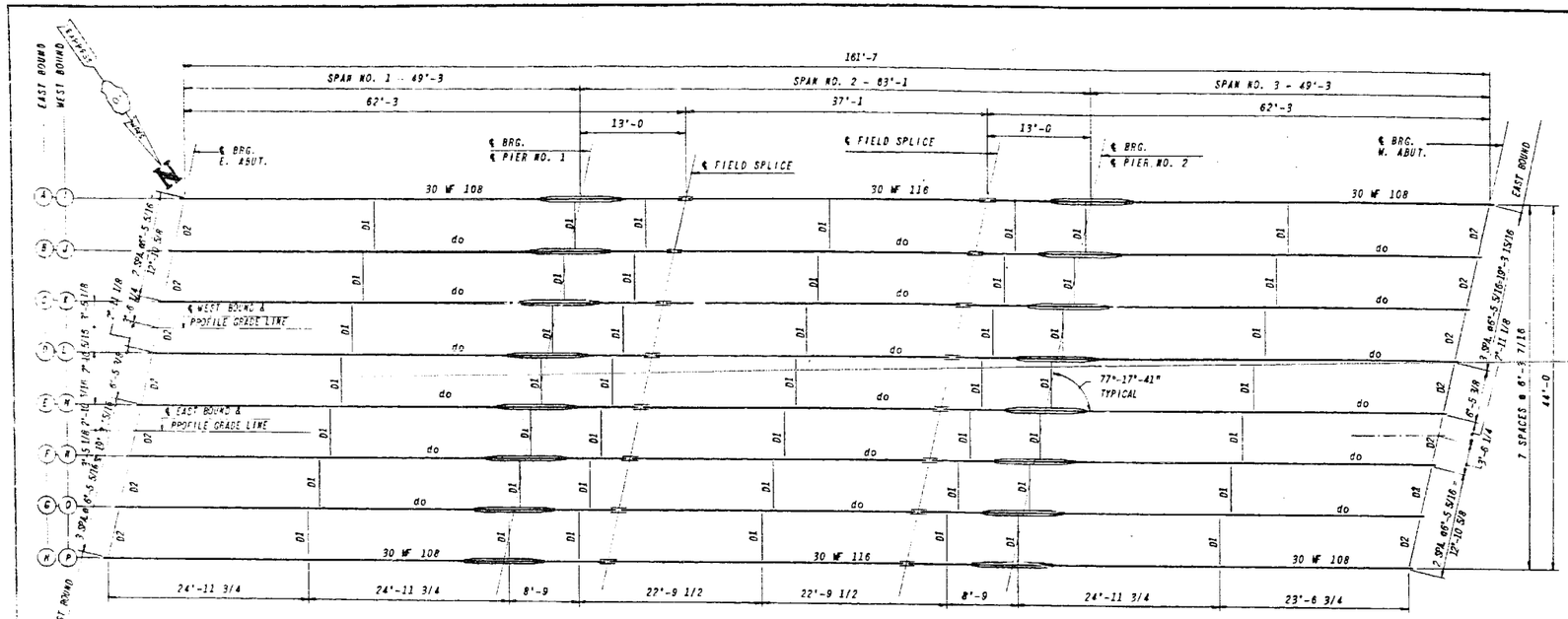

FRAMING PLAN

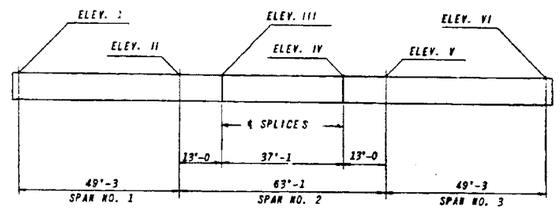

ELEVATION KEY

NOTE: ELEVATIONS FOR FABRICATION USE ONLY, DOES NOT INCLUDE DEFLECTIONS.

ELEVATION TOP OF STEEL (FLANGE) 30 WF 108

	POINT	I	II	III	IV	V	VI
EAST BOUND	STRINGER A	626.304	626.629	626.690	626.865	626.926	627.065
	" B	626.399	626.727	626.789	626.965	627.027	627.166
	" C	626.514	626.844	626.906	627.085	627.147	627.291
	" D	626.600	626.933	626.996	627.176	627.239	627.385
	" E	626.652	626.987	627.051	627.233	627.297	627.445
	" F	626.636	626.973	627.037	627.221	627.285	627.436
	" G	626.562	626.902	626.967	627.152	627.217	627.370
	" H	626.468	626.810	626.876	627.063	627.129	627.284
WEST BOUND	" I	626.395	626.751	626.820	627.018	627.087	627.254
	" J	626.467	626.825	626.895	627.094	627.164	627.335
	" K	626.518	626.879	626.949	627.150	627.220	627.394
	" L	626.512	626.875	626.946	627.149	627.220	627.396
	" M	626.438	626.803	626.875	627.079	627.151	627.329
	" N	626.329	626.696	626.768	626.975	627.047	627.228
	" O	626.191	626.561	626.634	626.842	626.915	627.098
	STRINGER P	626.070	626.446	626.520	626.729	626.803	626.988

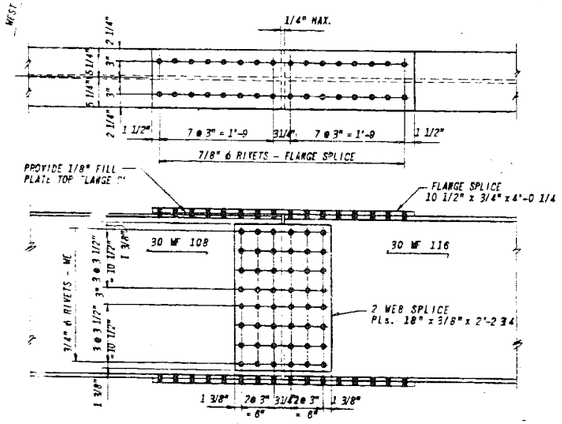

BEAM SPLICE DETAIL

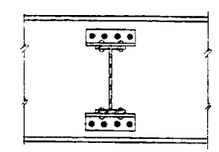

SECTION D-D

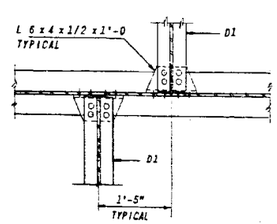

SECTION A-A

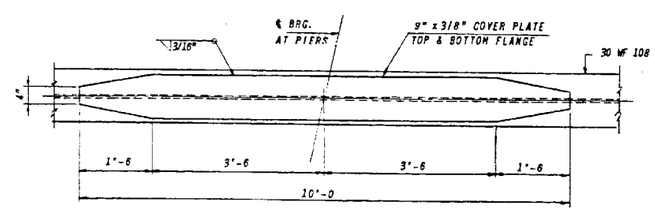

COVER PLATE DETAIL
64 REQUIRED - 2 BRIDGES

WEIGHT OF FRAMING STEEL . . . . . 347,910 LBS.
WEIGHT OF 1 1/2" OPEN JOINT DEVICES . . . . . 4,760 LBS.
WEIGHT OF BEARING DEVICES . . . . . 15,750 LBS.
FURNISHING AND ERECTING STRUCTURAL STEEL. . . 367,820 LBS.

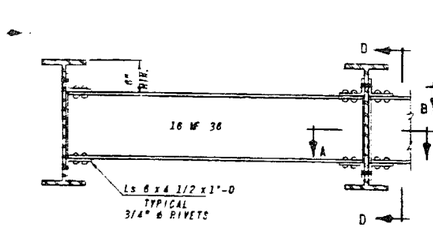

DIAPHRAGM D1
98 REQUIRED - 2 BRIDGES

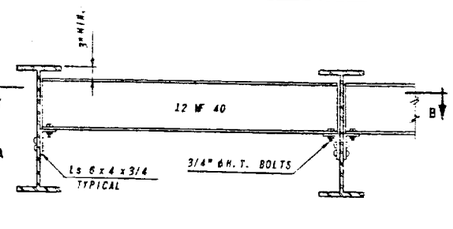

DIAPHRAGM D2
28 REQUIRED - 2 BRIDGES

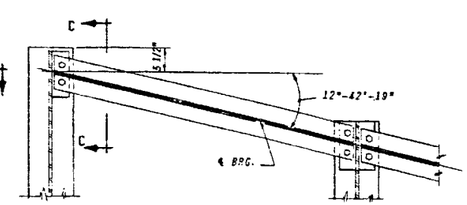

SECTION B-B

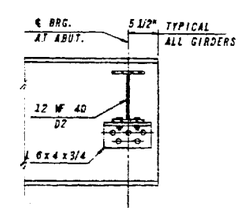

SECTION C-C

REVISIONS	
NAME	DATE
DESIGNED ST. PK	
REVIEWED CWW.	

ILLINOIS DIVISION OF HIGHWAYS
SOUTHWEST EXPRESSWAY
F.A. RT. 133
LAWNDALE AVE. STRUCTURE OVER G.M.& O. RAILROAD
SECTION 0707-617VB
FRAMING PLAN & STRUCT. STEEL DETAILS
SCALE: HORIZ. VERT. DRAWN BY J.S.
DATE 8-21-63 CHECKED BY L.D.B.

FOR INFORMATION ONLY

benesch engineers · scientists · planners
Alfred Benesch & Company
205 North Michigan Avenue, Suite 2400
Chicago, Illinois 60601
312-565-0450 Job No. 10093

FILE NAME =	USER NAME = tjanicke	DESIGNED - CMK	REVISED -
		CHECKED - JAW	REVISED -
016-0488-60J16-044-Existing Plans 8 of 14.dgn	PLOT SCALE =	DRAWN - CMK	REVISED -
	PLOT DATE = 12/20/2013	CHECKED - JAW	REVISED -

STATE OF ILLINOIS
DEPARTMENT OF TRANSPORTATION

EXISTING PLAN INFORMATION (8 OF 14)
STRUCTURE NO. 016-0488
SHEET NO. SHX8 OF SHX14 SHEETS

F.A.P. RTE.	SECTION	COUNTY	TOTAL SHEETS	SHEET NO.
373	2013-038B-R	COOK	821	782
		CONTRACT NO. 60J16		
		ILLINOIS FED. AID PROJECT		

X:\10000S\10093\Eng_Docs_Phase_II\SN_016_0488_0489_1st_Ave_over_ICC_RR\Final\Final 0488\016-0488-60J16-044-Existing Plans 8 of 14.dgn 6/23/2014 3:03:12 PM

F.A. RTE.	SECTION	EXPRESSWAYS	TOTAL SHEETS	SHEET NO.
133	0707-617VB	SOUTHWEST	66	45
STA.		TO STA.		
FED. ROAD DIST. NO. 7	ILLINOIS	FED. AID PROJ.		

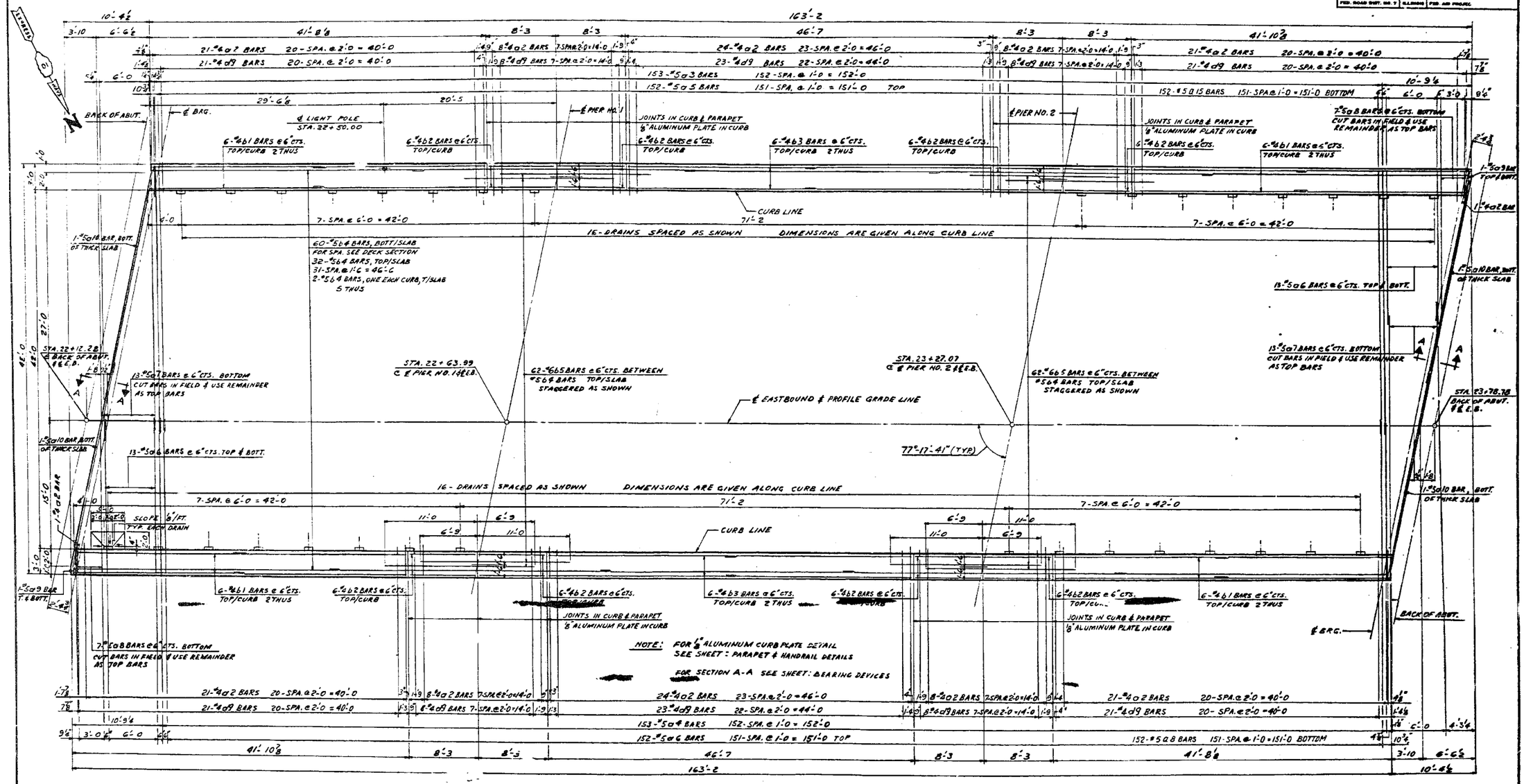

DECK PLAN SPAN NO.1 THRU NO.3 EASTBOUND

REVISIONS	
NAME	DATE
DESIGNED ST.	
REVIEWED C.W.W.	

ILLINOIS DIVISION OF HIGHWAYS
SOUTHWEST EXPRESSWAY
FA. RT. 133
LAWNDALE AVE. STRUCTURE OVER G.M.&O RAILROAD
SECTION 0707-617 VB
DECK PLAN SPAN NO.1 THRU NO.3 E.B.
SCALE: HORIZ. 3/16" = 1'-0 VERT.
DATE 8-21-63
DRAWN BY E.M.
CHECKED BY L.D.B.

benesch
engineers · scientists · planners
Alfred Benesch & Company
205 North Michigan Avenue, Suite 2400
Chicago, Illinois 60601
312-565-0450 Job No. 10093

FOR INFORMATION ONLY

FILE NAME =	USER NAME = tjanicke	DESIGNED - CMK	REVISED -
		CHECKED - JAW	REVISED -
016-0488-60J16-045-Existing Plans 9 of 14.dgn	PLOT SCALE =	DRAWN - CMK	REVISED -
	PLOT DATE = 12/20/2013	CHECKED - JAW	REVISED -

STATE OF ILLINOIS
DEPARTMENT OF TRANSPORTATION

EXISTING PLAN INFORMATION (9 OF 14)
STRUCTURE NO. 016-0488
SHEET NO. SHX9 OF SHX14 SHEETS

F.A.P. RTE.	SECTION	COUNTY	TOTAL SHEETS	SHEET NO.
373	2013-038B-R	COOK	821	783
		CONTRACT NO. 60J16		
		ILLINOIS FED. AID PROJECT		

X:\100005\10093\Eng_Docs_Phase_II\SN_016_0488_0489_1st_Ave_over_ICC_RR\Final\Final 0488\016-0488-60J16-045-Existing Plans 9 of 14.dgn
6/23/2014 3:03:13 PM

F.A. RTE.	SECTION	EXPRESSWAYS	TOTAL SHEETS	SHEET NO.
133	0707-617 VB	SOUTHWEST	66	47
STA.		TO STA.		
FED. ROAD DIST. NO. 7	ILLINOIS	FED. AID PROJECT		

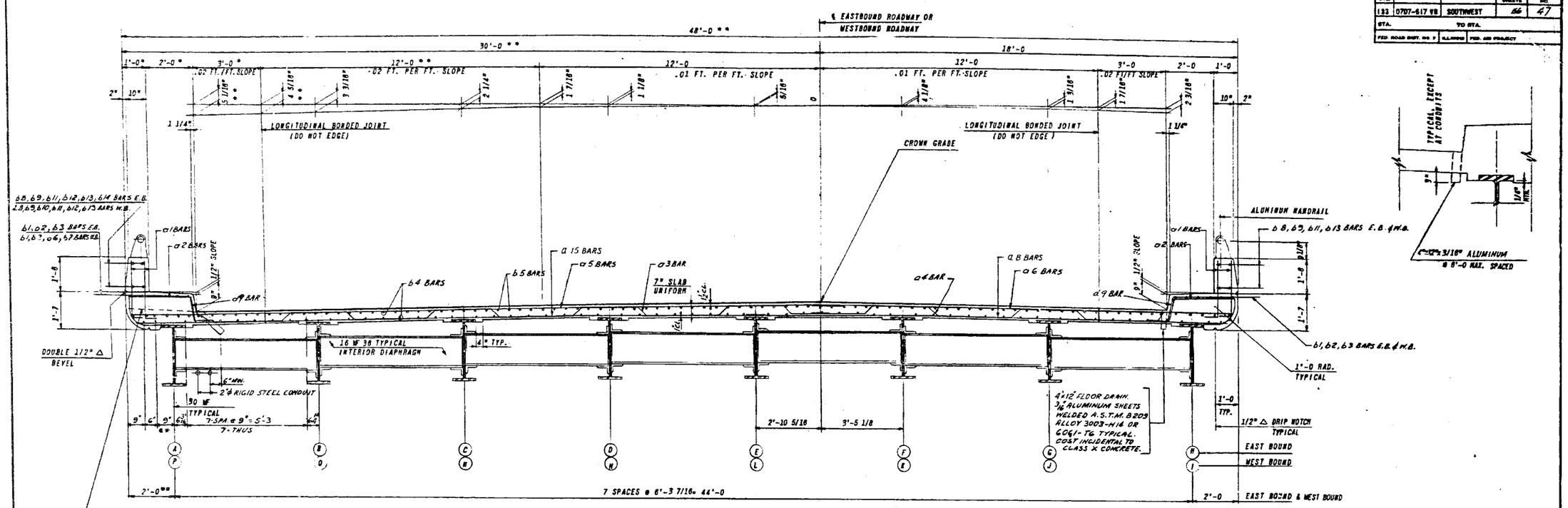

BOTTOM OF 1/8" ALUMINUM PLATE TO TOP OF CURB
FOR LOCATIONS SEE FLOOR PLANS
FOR DETAIL SEE SHEET: PARAPET & HANDRAIL DETAILS

* NORMAL TO EDGE OF PAVEMENT D = 3" RAMP "D" AT WEST BOUND (SPAN NO. 3)
** VARIES AT WEST BOUND (SPAN NO. 3)

TYPICAL DECK SECTION - EAST BOUND STRUCTURE AS SHOWN LOOKING UPSTATION
WEST BOUND STRUCTURE SIMILAR, LOOKING DOWN STATION

DECK - SPAN NO. 1 THRU NO. 3 WEST BOUND

BILL OF REINFORCEMENT

BAR	NO.	SIZE	LENGTH	SHAPE
a16	16	5	21'-3	
a1	415	5	3'-0	
a2	166	4	5'-9	
a3	153	5	32'-4	
a4	121	5	19'-0	
a5	152	5	30'-10	
a6	172	5	18'-2	
a7	26	5	32'-6	
a8	134	5	20'-9	
a9	4	5	4'-0	
a10	4	5	24'-7	
a11	16	5	19'-3	
a12	16	5	19'-6	
a13	16	5	18'-5	
a14	16	5	18'-8	
a15	152	5	30'-0	
b1	48	4	21'-5	
b2	42	4	7'-11	
b3	12	4	23'-8	
b4	470	5	33'-6	
b5	124	6	17'-9	
b6	6	4	9'-8	
b7	12	4	22'-9	
b8	32	5	13'-9	
b9	28	5	8'-0	
b10	4	5	9'-9	
b11	16	5	13'-6	
b12	4	5	13'-3	
b13	20	5	15'-3	
b14	16	5	21'-6	
d9	162	4	1'-1	

DECK QUANTITIES

REINFORCEMENT	LBS.	50,780
CLASS X CONCRETE	CU. YDS.	217.8
PROTECTIVE COAT	SQ. YDS.	1,130

DECK - SPAN NO. 1 THRU NO. 3 EASTBOUND

BILL OF REINFORCEMENT

BAR	NO.	SIZE	LENGTH	SHAPE
a1	419	5	3'-0	
a2	166	4	5'-9	
a3	153	5	32'-4	
a4	153	5	19'-0	
a5	152	5	30'-10	
a6	152	5	18'-2	
a7	26	5	32'-6	
a8	166	5	20'-9	
a9	4	5	4'-0	
a10	4	5	24'-7	
a15	152	5	30'-0	
b1	48	4	21'-5	
b2	48	4	7'-11	
b3	24	4	23'-8	
b4	470	5	33'-6	
b5	124	6	17'-9	
b8	24	5	13'-9	
b9	32	5	8'-0	
b11	12	5	13'-6	
b12	8	5	13'-3	
b13	24	5	15'-3	
b14	4	5	14'-6	
d9	162	4	1'-1	

DECK QUANTITIES

REINFORCEMENT	LBS.	49,760
CLASS X CONCRETE	CU. YDS.	217.5
PROTECTIVE COAT	SQ. YDS.	1,120

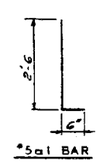

*5a1 BAR

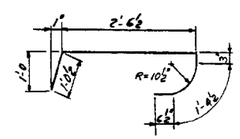

*4a2 BAR

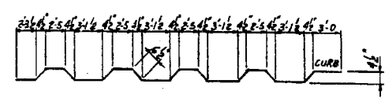

*5a3 BAR

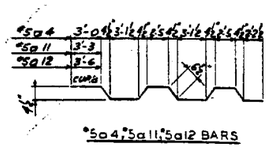

*5a4, *5a11, *5a12 BARS

REVISIONS	
NAME	DATE
DESIGNED ST.	
REVIEWED CWW	

ILLINOIS DIVISION OF HIGHWAYS
SOUTHWEST EXPRESSWAY
F.A. RT. 133
LAWNDALE AVE. STRUCTURE OVER G.M.&O. RAILROAD
SECTION 0707-617VB
DECK SECTION

SCALE: HORIZ. VERT.
DATE 8-21-63
DRAWN BY E.G.
CHECKED BY L.D.B.

FOR INFORMATION ONLY

benesch engineers · scientists · planners
Alfred Benesch & Company
205 North Michigan Avenue, Suite 2400
Chicago, Illinois 60601
312-565-0450 Job No. 10093

FILE NAME =	USER NAME = tjanicke	DESIGNED - CMK	REVISED -
		CHECKED - JAW	REVISED -
016-0488-60J16-046-Existing Plans 10 of 14.dgn	PLOT SCALE =	DRAWN - CMK	REVISED -
	PLOT DATE = 12/20/2013	CHECKED - JAW	REVISED -

STATE OF ILLINOIS
DEPARTMENT OF TRANSPORTATION

EXISTING PLAN INFORMATION (10 OF 14)
STRUCTURE NO. 016-0488
SHEET NO. SHX10 OF SHX14 SHEETS

F.A.P. RTE.	SECTION	COUNTY	TOTAL SHEETS	SHEET NO.
373	2013-038B-R	COOK	821	784
		CONTRACT NO. 60J16		
		ILLINOIS FED. AID PROJECT		

X:\10000S\10093\Eng_Docs_Phase_II\SN_016_0488_0489_1st_Ave_over_ICC_RR\Final\Final 0488\016-0488-60J16-046-Existing Plans 10 of 14.dgn 3:03:15 PM 6/23/2014

F.A. RTE.	SECTION	EXPRESSWAYS	TOTAL SHEETS	SHEET NO.
133	0707-617VB	SOUTHWEST	56	48
STA.		TO STA.		
FED. ROAD DIST. NO. 5	ILLINOIS	FED. AID PROJECT		

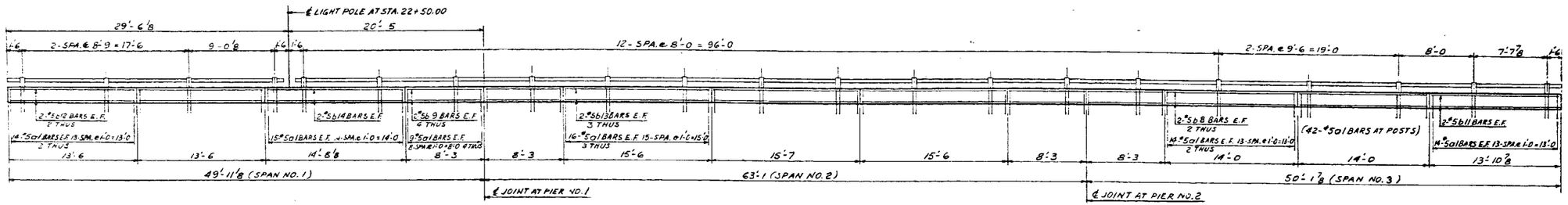

SOUTH PARAPET & HANDRAIL - SPAN NO. 1 THRU SPAN NO. 3 EASTBOUND - LOOKING SOUTH

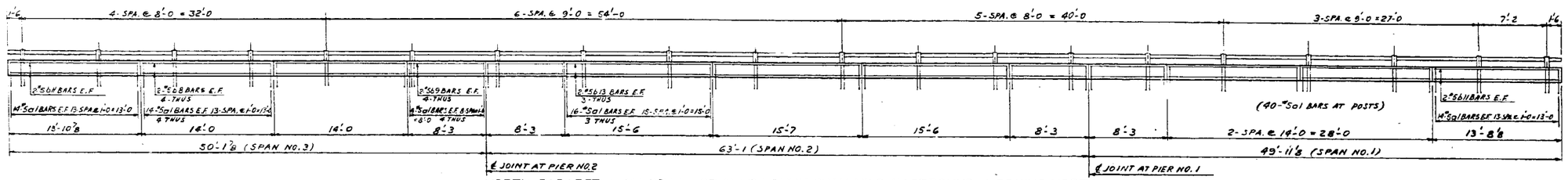

NORTH PARAPET & HANDRAIL - SPAN NO. 1 THRU SPAN NO. 3 EASTBOUND - LOOKING NORTH

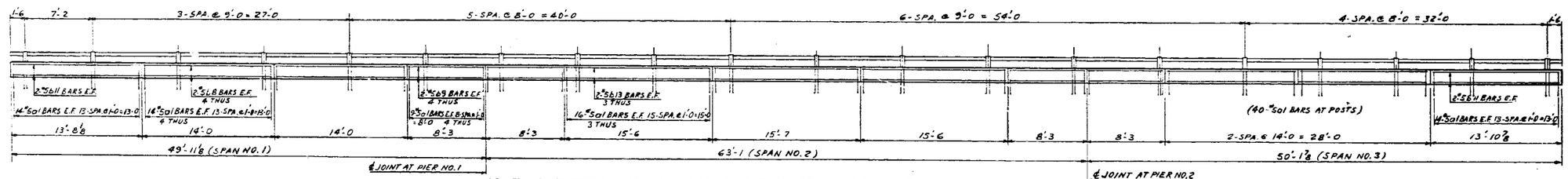

SOUTH PARAPET & HANDRAIL - SPAN NO. 1 THRU SPAN NO. 3 WESTBOUND - LOOKING SOUTH

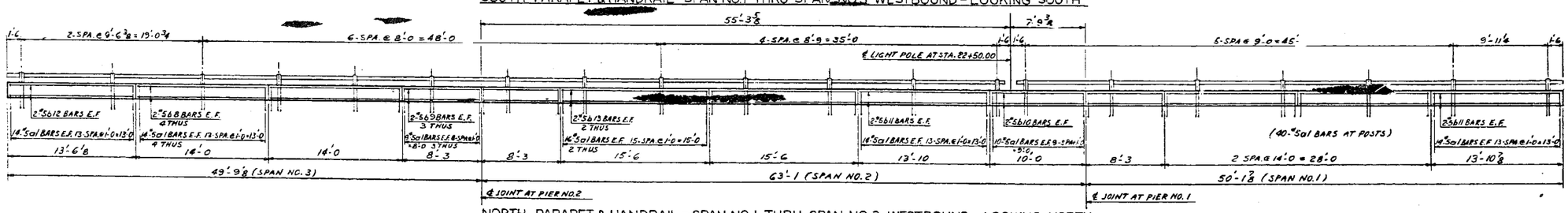

NORTH PARAPET & HANDRAIL - SPAN NO. 1 THRU SPAN NO. 3 WESTBOUND - LOOKING NORTH

NOTE:
LONGITUDINAL DIMENSIONS ARE ALONG INSIDE FACE OF PARAPET.

TOTAL ALUMINUM HANDRAIL 653 LIN. FT.

REVISIONS	
NAME	DATE
DESIGNED S.T.	
REVIEWED C.W.W.	

ILLINOIS DIVISION OF HIGHWAYS
SOUTHWEST EXPRESSWAY

F.A. RT. 133
LAWNDALE AVE. STRUCTURE OVER
G.M.&O RAILROAD
SECTION 0707-617 VB
PARAPET & HANDRAIL ELEVATION

SCALE: HORIZ. VERT.
DRAWN BY E.M.
DATE 8-21-63
CHECKED BY L.D.B.

FOR INFORMATION ONLY

benesch engineers · scientists · planners
Alfred Benesch & Company
205 North Michigan Avenue, Suite 2400
Chicago, Illinois 60601
312-565-0450 Job No. 10093

FILE NAME =	USER NAME = tjanicke	DESIGNED - CMK	REVISED -
		CHECKED - JAW	REVISED -
016-0488-60J16-047-Existing Plans 11 of 14.dgn	PLOT SCALE =	DRAWN - CMK	REVISED -
	PLOT DATE = 12/20/2013	CHECKED - JAW	REVISED -

STATE OF ILLINOIS
DEPARTMENT OF TRANSPORTATION

EXISTING PLAN INFORMATION (11 OF 14)
STRUCTURE NO. 016-0488
SHEET NO. SHX11 OF SHX14 SHEETS

F.A.P. RTE.	SECTION	COUNTY	TOTAL SHEETS	SHEET NO.
373	2013-038B-R	COOK	821	785
		CONTRACT NO. 60J16		
		ILLINOIS FED. AID PROJECT		

X:\10000S\10093\Eng_Docs_Phase_II\SN_016_0488_0489_1st_Ave_over_ICC_RR\Final\0488\016-0488-60J16-047-Existing Plans 11 of 14.dgn
6/23/2014 3:03:16 PM

F.A. RTE.	SECTION	EXPRESSWAYS	TOTAL SHEETS	SHEET NO.
133	0707-617VB	SOUTHWEST	56	51
STA.		TO STA.		
FED. ROAD DIST. NO. 7	ILLINOIS	FED. AID PROJECT		

NOTES:

PLATES SHALL BE FURNISHED AND INSTALLED AS SPECIFIED IN SECTION 81 OF THE STANDARD SPECIFICATIONS FOR ROAD AND BRIDGE CONSTRUCTION ADOPTED JANUARY 2, 1958 AND AS SHOWN ON THE PLANS.

DETAILED PLANS OF PLATE AND LETTERING WILL BE FURNISHED THE CONTRACTOR AFTER CONTRACT IS AWARDED.

MATERIAL - BEST QUALITY BRASS OR BRONZE BORDER AND LETTERS RAISED 1/8" SQUARE CUT AND NOT TAPERED, TOP SURFACE POLISHED.

THE NAME PLATE SHALL BE EMBEDDED IN THE CONCRETE SO THAT THE FACE OF THE NAME PLATE IS FLUSH WITH THE SURFACE OF THE CONCRETE.

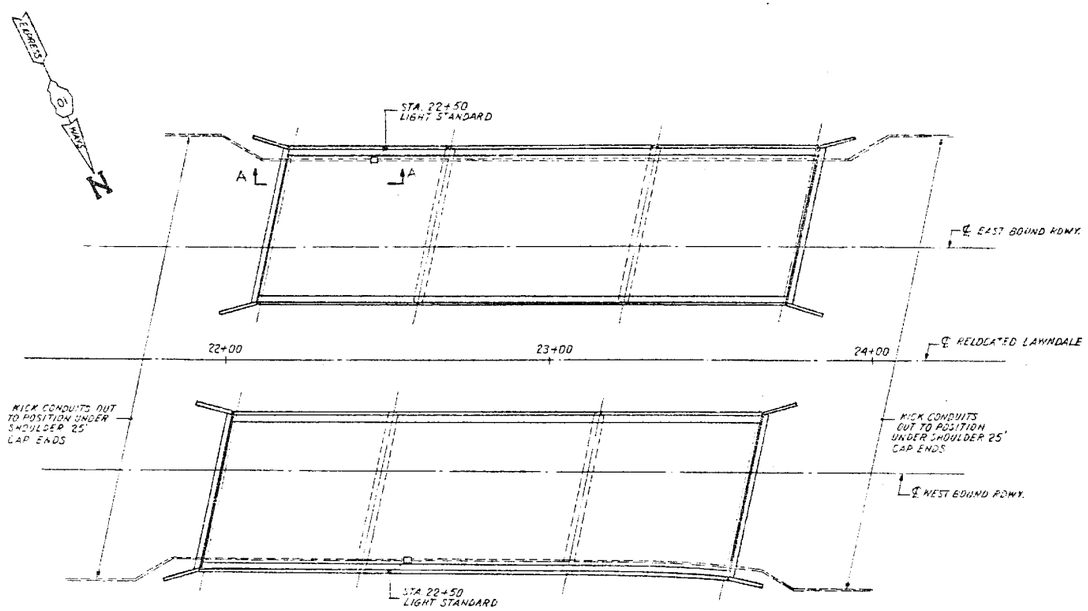

PLAN

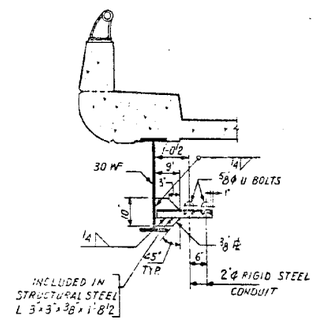

SECTION B-B

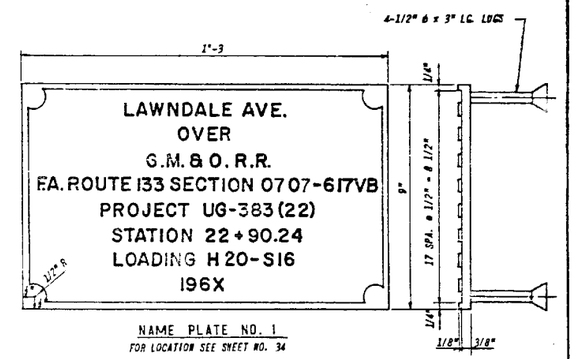

NAME PLATE NO. 1
FOR LOCATION SEE SHEET NO. 34

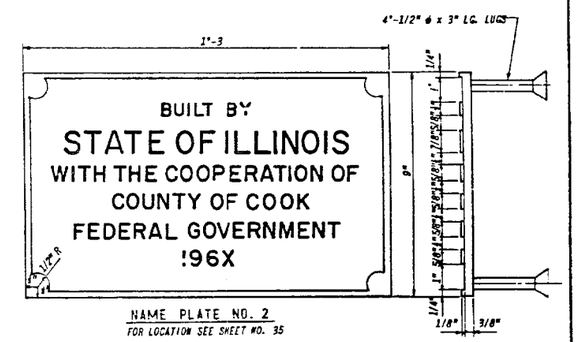

NAME PLATE NO. 2
FOR LOCATION SEE SHEET NO. 35

BILL OF MATERIAL

ITEM	UNIT	QUANTITY
CONDUIT IN TRENCH 2" DIA. GALV. STEEL	LIN. FT.	200
CONDUIT ATTACHED TO STRUCTURE 1 1/2 GALV. STEEL	LIN. FT.	5
CONDUIT ATTACHED TO STRUCTURE 2" GALV. STEEL	LIN. FT.	660
CONDUIT IN CONCRETE 1 1/2 DIA. GALV. STEEL	LIN. FT.	10
CONDUIT IN [redacted] 2 DIA. GALV. STEEL	LIN. FT.	10
TRENCH & BACKFILL	LIN. FT.	100

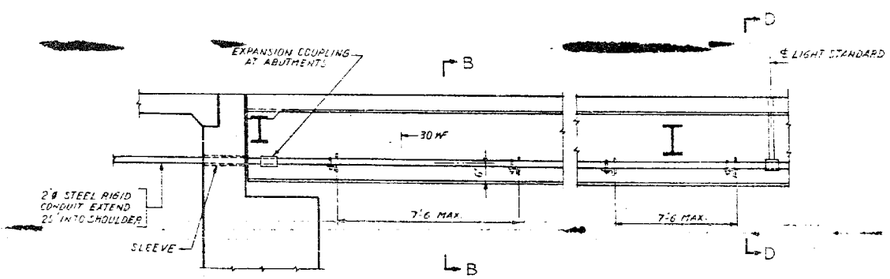

SECTION A-A

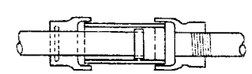

EXPANSION COUPLING

NOTES:

SEE LIGHT STANDARD BASE DETAILS ON SHEET PARAPET AND HANDRAIL DETAILS.

PRICE PER UNIT FOOT OF CONDUIT SHALL INCLUDE ALL COUPLINGS ELBOWS, FITTINGS ETC. NECESSARY TO COMPLETE INSTALLATION.

FOR SECTION D-D SEE SHEET PARAPET AND HANDRAIL DETAILS.

REVISIONS	
NAME	DATE
DESIGNED S.T.	
REVIEWED C.A.W.	

ILLINOIS DIVISION OF HIGHWAYS
SOUTHWEST EXPRESSWAY
F.A. RT. 133
LAWNDALE AVE. STRUCTURE OVER
G.M.& O. RAILROAD
SECTION 0707-617VB
ELECTRICAL DETAILS

SCALE: HORIZ. VERT. DRAWN BY J.W.
DATE 8-21-63 CHECKED BY L.D.B.

FOR INFORMATION ONLY

benesch engineers · scientists · planners
Alfred Benesch & Company
205 North Michigan Avenue, Suite 2400
Chicago, Illinois 60601
312-565-0450 Job No. 10093

FILE NAME =	USER NAME = tjanicke	DESIGNED - CMK	REVISED -
016-0488-60J16-048-Existing Plans 12 of 14.dgn		CHECKED - JAW	REVISED -
	PLOT SCALE =	DRAWN - CMK	REVISED -
	PLOT DATE = 12/20/2013	CHECKED - JAW	REVISED -

STATE OF ILLINOIS
DEPARTMENT OF TRANSPORTATION

EXISTING PLAN INFORMATION (12 OF 14)
STRUCTURE NO. 016-0488
SHEET NO. SHX12 OF SHX14 SHEETS

F.A.P. RTE.	SECTION	COUNTY	TOTAL SHEETS	SHEET NO.
373	2013-038B-R	COOK	821	786
		CONTRACT NO. 60J16		
	ILLINOIS	FED. AID PROJECT		

X:\100005\10093\Eng_Docs_Phase_II\SN_016_0488_0489_1st_Ave_over_ICC_RR\Final\0488\016-0488-60J16-048-Existing Plans 12 of 14.dgn
6/23/2014 3:03:18 PM

ROUTE NO.	SECTION	COUNTY	TOTAL SHEETS	SHEET NO.
IL 171	**	COOK	883	814
		ILLINOIS	FED. AID PROJECT	

** SECTION 0707-617 VB (BR)

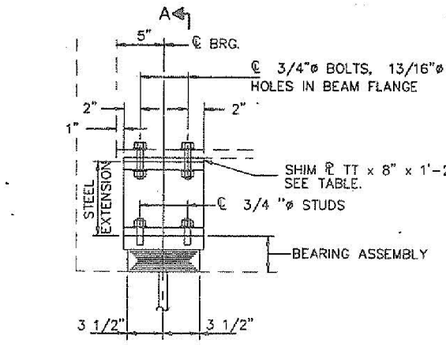

ELEVATION AT EAST ABUTMENT

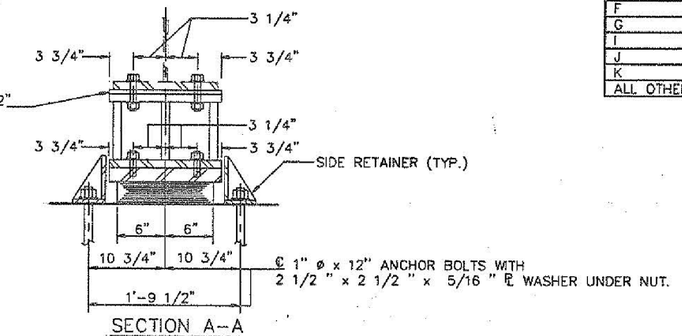

SECTION A-A

TYPE I ELASTOMERIC EXP. BRG.

SHIM PL TT	
STRINGER	TT
E	1/8" + 5/8"
F	1/8" + 7/16"
G	1/8" + 5/16"
I	1/8" + 1/8"
J	1/8" + 3/16"
K	1/8" + 1/8"
ALL OTHERS	1/8"

BEAM REACTIONS

RP	(K)	18.7
RL	(K)	36.0
IMPACT	(K)	10.3
R (TOTAL)	(K)	65.0

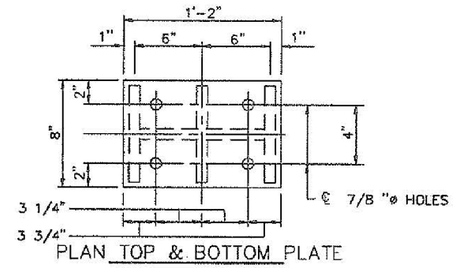

PLAN TOP & BOTTOM PLATE

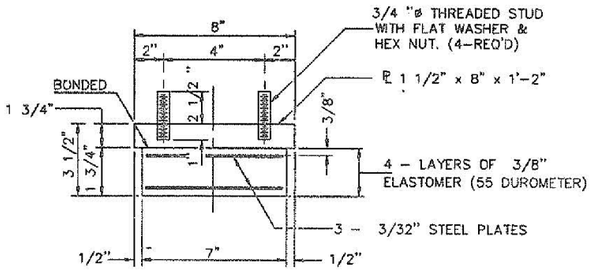

BEARING ASSEMBLY

NOTE: SHIM PLATES SHALL NOT BE PLACED UNDER BEARING ASSEMBLY.

NOTES: DIAPHRAGM REMOVAL AND REPLACEMENT MAY BE REQUIRED TO FACILITATE DRILLING HOLES IN THE BOTTOM FLANGE FOR BEARING ATTACHMENT. COST IS INCIDENTAL TO "FURNISHING AND ERECTING STRUCTURAL STEEL".

NEW STEEL EXTENSIONS, SIDE RETAINERS, LEAD PLATES, SHIM PLATES, CONNECTION BOLTS AND ANCHOR BOLTS ARE INCLUDED IN "FURNISHING AND ERECTING STRUCTURAL STEEL".

SEE SHEET 18 FOR ANCHOR BOLT INSTALLATION.

BEFORE INSTALLING THE NEW BEARING, THE TOP PLATE OF THE EXISTING BEARING ASSEMBLY SHALL BE REMOVED FROM THE BOTTOM FLANGE USING THE AIR-ARC METHOD. GRIND SMOOTH ALL WELD MATERIAL REMAINING ON THE BOTTOM FLANGE. BURN EXISTING ANCHOR BOLTS FLUSH WITH EXISTING CONCRETE SURFACE. GRIND EXISTING ANCHOR BOLT SMOOTH AND SEAL WITH EPOXY. COST IS INCIDENTAL TO FURNISHING AND ERECTING STRUCTURAL STEEL.

TRAFFIC SHALL BE REMOVED FROM THE PORTION OF THE STRUCTURE TO BE JACKED PRIOR TO COMMENCING JACKING OPERATIONS. TRAFFIC SHALL BE KEPT OFF THAT PORTION OF THE STRUCTURE DURING THE ENTIRE BEARING REPLACEMENT OPERATION. DIFFERENTIAL JACKING HEIGHT NOT TO EXCEED 1/8" TRANSVERSELY BETWEEN ADJACENT BEAMS OR 1/4" LONGITUDINALLY BETWEEN ADJACENT SUPPORTS.

PRIOR TO ORDERING ANY MATERIAL, THE CONTRACTOR SHALL VERIFY IN THE FIELD ALL BEARING HEIGHT AND SHIM DIMENSIONS.

SEE SUPERSTRUCTURE OVERLAY & REPAIR PLANS FOR BEAM LOCATIONS.

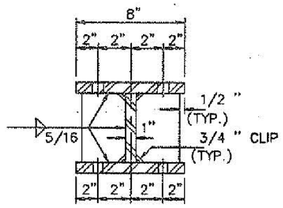

SECTION B-B

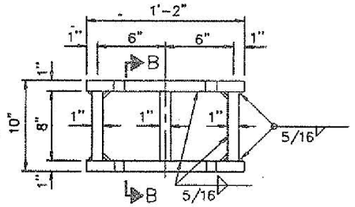

STEEL EXTENSION DETAIL

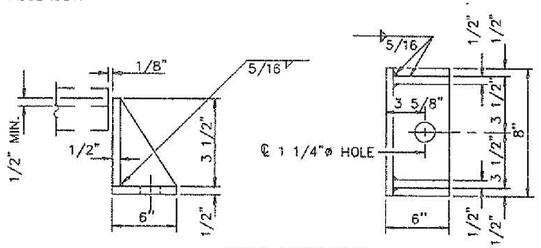

SIDE RETAINER

EQUIVALENT ROLLED ANGLE WITH STIFFENERS WILL BE ALLOWED IN LIEU OF WELDED PLATES.

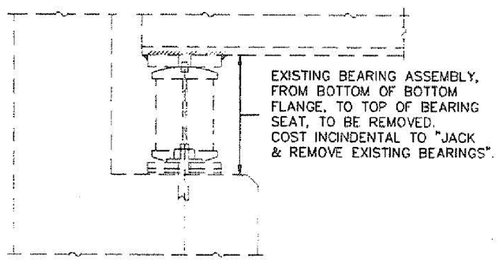

EXISTING ELEVATION

BILL OF MATERIAL

ITEM	UNIT	TOTAL
ELASTOMERIC BEARING ASSEMBLY TYPE I	EACH	16
JACK & REMOVE EXISTING BEARINGS	EACH	16
FURNISH & ERECT STRUCTURAL STEEL	LBS	2900
BRIDGE SEAT SEALER	SQ FT	278

ILLINOIS DEPARTMENT OF TRANSPORTATION

EAST ABUTMENTS
TYPE I BEARINGS
BRIDGE REPAIRS
1ST AVE (IL 171) S.N. 016-0488 & 016-0489
OVER G.M. & O. RAILROAD

F.A.U. RT. 1505 SECTION 0707-617 VB (BR)
COOK CO. IL
STA. 22+90.24

12/03/93 08:52:32 A.M. 4881\PILDWG

19
EXAMINED
ENGINEER OF BRIDGE DESIGN
PASSED
ENGINEER OF BRIDGES AND STRUCTURES
APPROVED
DIRECTOR OF HIGHWAYS

benesch
engineers · scientists · planners
Alfred Benesch & Company
205 North Michigan Avenue, Suite 2400
Chicago, Illinois 60601
312-565-0450 Job No. 10093

FOR INFORMATION ONLY

FILE NAME =	USER NAME = tjanicke	DESIGNED - CMK	REVISED -	STATE OF ILLINOIS DEPARTMENT OF TRANSPORTATION	EXISTING PLAN INFORMATION (13 OF 14) STRUCTURE NO. 016-0488	F.A.P. RTE.	SECTION	COUNTY	TOTAL SHEETS	SHEET NO.
		CHECKED - JAW	REVISED -			373	2013-038B-R	COOK	821	787
016-0488-60J16-049-Existing Plans 13 of 14.dgn	PLOT SCALE =	DRAWN - CMK	REVISED -			CONTRACT NO. 60J16				
	PLOT DATE = 12/20/2013	CHECKED - JAW	REVISED -		SHEET NO. SHX13 OF SHX14 SHEETS	ILLINOIS FED. AID PROJECT				

X:\10000S\10093\Eng_Docs_Phase_II\SN_016_0488_0489_1st_Ave_over_ICC_RR\Final\Final 0488\016-0488-60J16-049-Existing Plans 13 of 14.dgn 6/23/2014 3:03:19 PM

ROUTE NO.	SECTION	COUNTY	TOTAL SHEETS	SHEET NO.
IL 171	**	COOK	583	515
		ILLINOIS	FED. AID PROJECT	

** SECTION 0707-617 VB (BR)

NOTES: DIAPHRAGM REMOVAL AND REPLACEMENT MAY BE REQUIRED TO FACILITATE DRILLING HOLES IN THE BOTTOM FLANGE FOR BEARING ATTACHMENT. COST IS INCIDENTAL TO "FURNISHING AND ERECTING STRUCTURAL STEEL".

NEW STEEL EXTENSIONS, SIDE RETAINERS, LEAD PLATES, CONNECTION BOLTS AND ANCHOR BOLTS ARE INCLUDED IN "FURNISHING AND ERECTING STRUCTURAL STEEL".

SEE SHEET 18 FOR ANCHOR BOLT INSTALLATION.

BEFORE INSTALLING THE NEW BEARING, THE TOP PLATE OF THE EXISTING BEARING ASSEMBLY SHALL BE REMOVED FROM THE BOTTOM FLANGE USING THE AIR-ARC METHOD. GRIND SMOOTH ALL WELD MATERIAL REMAINING ON THE BOTTOM FLANGE. BURN EXISTING ANCHOR BOLTS FLUSH WITH EXISTING CONCRETE SURFACE. GRIND EXISTING ANCHOR BOLT SMOOTH AND SEAL WITH EPOXY. COST IS INCIDENTAL TO FURNISHING AND ERECTING STRUCTURAL STEEL.

TRAFFIC SHALL BE REMOVED FROM THE PORTION OF THE STRUCTURE TO BE JACKED PRIOR TO COMMENCING JACKING OPERATIONS. TRAFFIC SHALL BE KEPT OFF THAT PORTION OF THE STRUCTURE DURING THE ENTIRE BEARING REPLACEMENT OPERATION. DIFFERENTIAL JACKING HEIGHT NOT TO EXCEED 1/8" TRANSVERSELY BETWEEN ADJACENT BEAMS OR 1/4" LONGITUDINALLY BETWEEN ADJACENT SUPPORTS.

PRIOR TO ORDERING ANY MATERIAL, THE CONTRACTOR SHALL VERIFY IN THE FIELD ALL BEARING HEIGHT AND SHIM DIMENSIONS.

SEE SUPERSTRUCTURE OVERLAY & REPAIR PLANS FOR BEAM LOCATIONS.

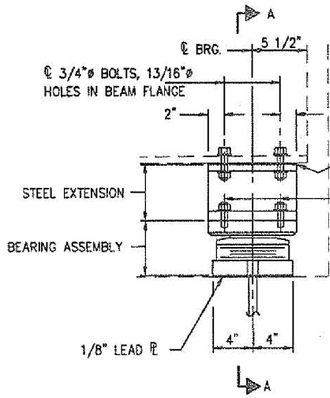

ELEVATION AT WEST ABUTMENT

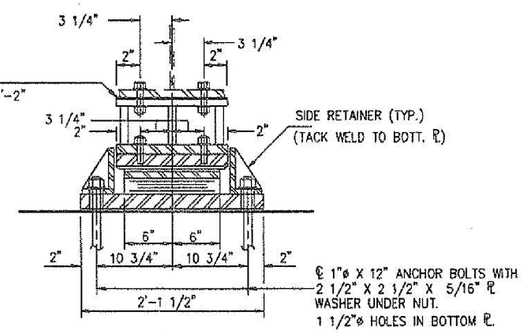

SECTION A-A

TYPE II TFE ELASTOMERIC EXP. BRG.

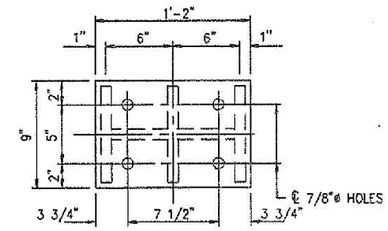

PLAN TOP & BOTTOM PLATES

SHIM ℙ TT	
STRINGER	TT
E	1/8" + 3/4"
F	1/8" + 5/8"
G	1/8" + 9/16"
H	1/8" + 5/16"
ALL OTHERS	1/8"

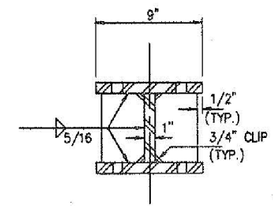

SECTION B-B

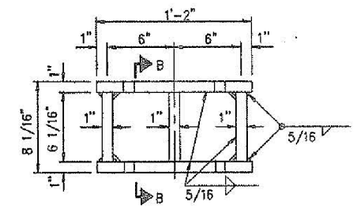

STEEL EXTENSION DETAIL

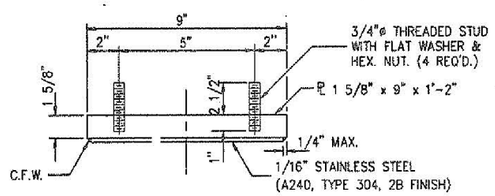

TOP BEARING ASSEMBLY

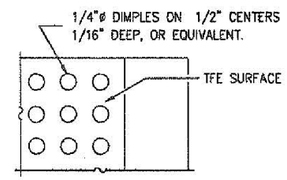

PLAN-TFE SURFACE

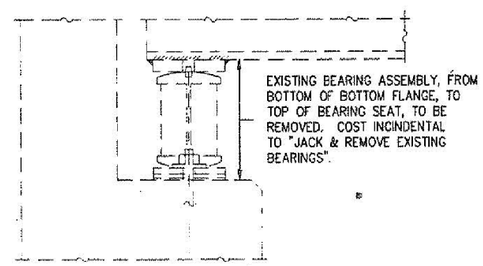

EXISTING ELEVATION

BEAM REACTIONS

RL	(K)	18.7
RL	(K)	36.0
IMP.	(K)	10.3
R (TOTAL)	(K)	65.0

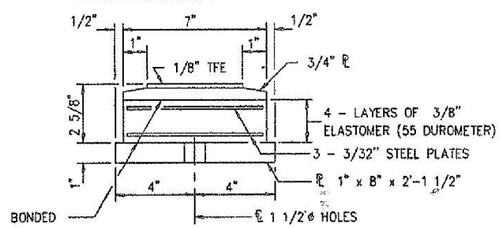

BOTTOM BEARING ASSEMBLY

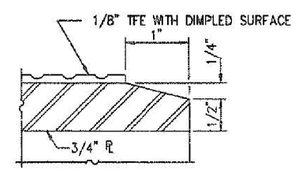

SECTION THRU TFE

NOTE: THE 1/8 " TFE SHEET SHALL BE BONDED DIRECTLY TO THE TOP STEEL PLATE WITH A TWO-COMPONENT, MEDIUM VISCOSITY EPOXY RESIN, CONFORMING TO THE REQUIREMENTS OF THE FEDERAL SPECIFICATION MMM-A-134, TYPE I. THE BOND AGENT SHALL BE APPLIED ON THE FULL AREA OF THE CONTACT SURFACES.

BONDING OF 1/8 " TFE SHEET DURING VULCANIZING PROCESS WILL BE PERMITTED PROVIDED THE PROCESS AND METHOD OF ADJUSTING ASSEMBLY HEIGHT IS APPROVED BY THE ENGINEER.

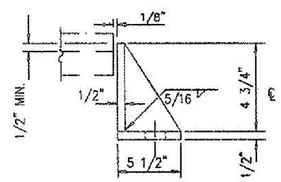

SIDE RETAINER

EQUIVALENT ROLLED ANGLE WITH STIFFENERS WILL BE ALLOWED IN LIEU OF WELDED PLATES.

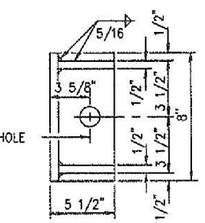

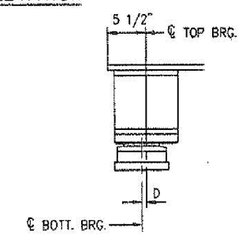

BELOW 50°F.
(MOVE BOTT. BRG. AWAY FROM FIXED BRG.)

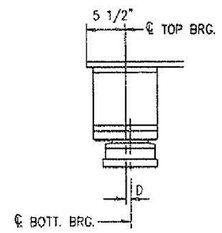

ABOVE 50°F.
(MOVE BOTT. BRG. TOWARD FIXED BRG.)

SETTING ANCHOR BOLTS AT EXP. BRG.

D= 1/8 " PER EACH 100' OF EXPANSION FOR EVERY 15° TEMP. CHANGE FROM THE NORMAL TEMP. OF 50°F.

BILL OF MATERIAL

ITEM	UNIT	TOTAL
ELASTOMERIC BEARING ASSEMBLY TYPE II	EACH	16
JACK & REMOVE EXISTING BEARINGS	EACH	16
FURNISH & ERECT STRUCTURAL STEEL	LBS	3080
BRIDGE SEAT SEALER	SQ FT	281

ILLINOIS DEPARTMENT OF TRANSPORTATION

WEST ABUTMENTS
TYPE II BEARINGS
BRIDGE REPAIRS
1ST AVE (IL 171) S.N. 016-0488 & 016-0489
OVER G.M. & O. RAILROAD

F.A.U. RT. 1505 SECTION 0707-617 VB (BR)
COOK CO. IL
STA. 22+90.24

EXAMINED _____ 19
ENGINEER OF BRIDGE DESIGN
PASSED
ENGINEER OF BRIDGES AND STRUCTURES
APPROVED
DIRECTOR OF HIGHWAYS

11/30/93 05:54:04 P.M. 488TYP2.DWG

benesch
engineers · scientists · planners
Alfred Benesch & Company
205 North Michigan Avenue, Suite 2400
Chicago, Illinois 60601
312-565-0450 Job No. 10093

FOR INFORMATION ONLY

FILE NAME = 016-0488-60J16-050-Existing Plans 14 of 14.dgn	USER NAME = tjanicke	DESIGNED - CMK	REVISED -
	PLOT SCALE =	CHECKED - JAW	REVISED -
	PLOT DATE = 12/20/2013	DRAWN - CMK	REVISED -
		CHECKED - JAW	REVISED -

STATE OF ILLINOIS
DEPARTMENT OF TRANSPORTATION

EXISTING PLAN INFORMATION (14 OF 14)
STRUCTURE NO. 016-0488
SHEET NO. SHX14 OF SHX14 SHEETS

F.A.P. RTE.	SECTION	COUNTY	TOTAL SHEETS	SHEET NO.
373	2013-038B-R	COOK	821	788
		CONTRACT NO. 60J16		
		ILLINOIS	FED. AID PROJECT	

6/23/2014 3:03:27 PM X:\10000S\10093\Eng_Docs_Phase_II\SN_016_0488_0489_1st_Ave_over_ICC_RR\Final\0488-60J16-050-Existing Plans 14 of 14.dgn

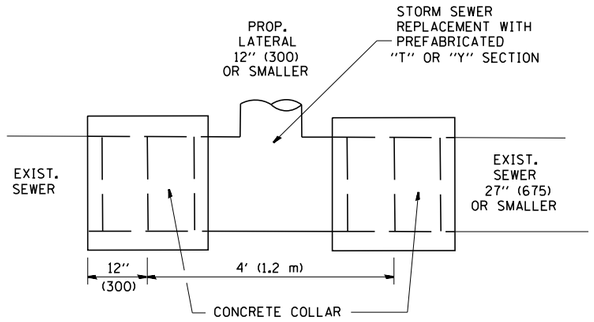

DETAIL "A"

LATERAL CONNECTION TO EXISTING SEWER
OF 27" (675) OR SMALLER

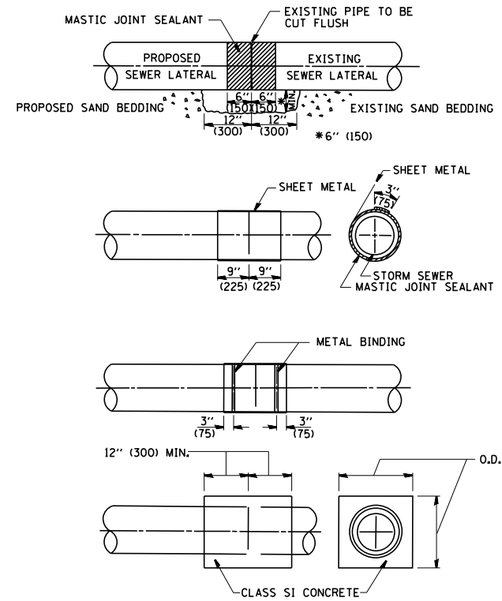

DETAIL "B"

CLASS SI CONCRETE COLLAR

CONSTRUCTION SEQUENCE

1. CUT THE EXISTING END OF THE PIPE SO AS TO PRESENT A FLUSH BUTT JOINT. BRUSH AND CLEAN ALL PIPES.
2. APPLY THE MASTIC JOINT SEALANT TO THE FIRST 6" (150) OF EACH PIPE.
3. BUTT THE PIPES TOGETHER LEAVING A MINIMUM OF 12' x 6' (300 x 150) DEEP EXCAVATION UNDER AND AROUND EACH PIPE END.
4. CUT A PIECE OF SHEET METAL GAGE NO. 19 1.1 (0.0418) 18" (450) WIDE BY THE OUTSIDE CIRCUMFERANCE OF THE PIPE PLUS 3" (75) LONG.
5. WRAP THE SHEET METAL AROUND THE PIPES, 9" (225) ON EACH SIDE OF THE JOINT, STARTING AT THE TOP OF THE PIPE.
6. LAP THE SHEET METAL AT LEAST 3" (75) AT THE TOP OF THE PIPE AND PLACE THE MASTIC JOINT SEALANT BETWEEN THE LAP.
7. PLACE TWO METAL BANDS AROUND THE SHEET METAL AND TIGHTEN.
8. WIPE OFF ANY EXCESS MASTIC JOINT SEALANT THAT OOZES OUT FROM BETWEEN THE SHEET METAL AND THE PIPES.
9. PLACE CLASS SI CONCRETE AROUND THE JOINT.

ALL DIMENSIONS ARE IN INCHES (MILLIMETERS) UNLESS OTHERWISE SHOWN.

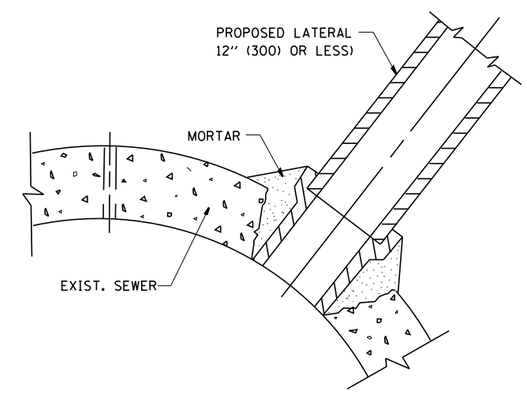

DETAIL "C"

PROPOSED LATERAL
CONNECTION TO EXISTING SEWER
OF 30" (750) OR LARGER

NOTES

MATERIAL

MATERIAL USED FOR THE TEE OR WYE SECTION SHALL BE COMPATIBLE WITH THE EXISTING STORM SEWER OR THE PROPOSED STORM SEWER.

CONSTRUCTION METHODS

I. THIS WORK SHALL BE CONSTRUCTED IN CONFORMANCE WITH THE APPLICABLE PORTIONS OF SECTION 550 OF THE STANDARD SPECIFICATIONS.

II. CONNECTION TO AN EXISTING STORM SEWER SHALL BE BY EITHER OF THE FOLLOWING METHODS:

A) PROPOSED STORM SEWER CONNECTION TO EXISTING SEWER OF 27" (675) OR SMALLER SEE DETAIL "A" AND "B".

B) PROPOSED STORM SEWER CONNECTION TO EXISTING SEWER OF 30" (750) OR LARGER SEE DETAIL "C".

IF THE EXISTING SEWER PIPE IS CRACKED, BROKEN OR OTHERWISE DAMAGED BY THE CONTRACTOR IN MAKING THE CIRCULAR OPENING, THE CONTRACTOR SHALL REPLACE THAT SECTION OF PIPE WITH PIPE EQUAL AND SIMILAR IN ALL RESPECTS TO THE PIPE IN THE EXISTING SEWER, IN A CAREFUL WORKMANLIKE MANNER, WITHOUT EXTRA COMPENSATION.

GENERAL

CARE MUST BE TAKEN TO PREVENT DEBRIS FROM ENTERING THE SEWER. ALL DEBRIS WHICH ENTERS THE SEWER MUST BE REMOVED. THE SEWER MUST BE LEFT CLEAN AND UNOBSTRUCTED UPON COMPLETION OF THE CONTRACT.

CARE MUST BE TAKEN TO PREVENT ANY PART OF THE NEW PIPE CONNECTION FROM PROJECTING INTO THE EXISTING SEWER.

BASIS OF PAYMENT

TEE OR WYE CONNECTIONS SHALL BE PAID FOR AT THE CONTRACT UNIT PRICE EACH FOR STORM SEWER TEE OR WYE OF THE TYPE AND SIZE SPECIFIED IN THE PLANS. THIS PRICE SHALL INCLUDE ALL EXCAVATION OF THE TRENCH, REMOVAL OF THE EXISTING STORM SEWER, FURNISHING AND INSTALLING THE SPECIFIED TEE OR WYE SECTION, FURNISHING AND INSTALLING THE REQUIRED CONCRETE COLLAR, AND ALL OTHER MATERIAL NECESSARY TO COMPLETE THIS WORK AS SHOWN AND SPECIFIED.

REMOVAL AND REINSTALLATION OF EXISTING STORM SEWER ADJACENT TO THE PROPOSED TEE OR WYE SECTION, FOR THE PURPOSE OF FACILITATING THE INSTALLATION OF THE TEE OR WYE SECTION, WILL NOT BE PAID FOR SEPARATELY BUT SHALL BE INCLUDED IN THE UNIT PRICE BID FOR THE WORK.

TRENCH BACKFILL, EXCAVATION IN ROCK AND REMOVAL AND REPLACEMENT OF UNSUITABLE MATERIAL BELOW PLAN BEDDING GRADE WILL BE PAID FOR SEPARATELY.

CONCRETE COLLAR FOR CONNECTING A PROPOSED STORM SEWER TO AN EXISTING STORM SEWER WILL NOT BE PAID PAID FOR SEPARATELY BUT SHALL BE INCLUDED IN THE COST OF THE PROPOSED STORM SEWER.

FILE NAME = ...\D160J16-sht-D1-bd-07.dgn	USER NAME = tblank	DESIGNED - M. DE YONG	REVISED - M. DE YONG 05-08-92	STATE OF ILLINOIS DEPARTMENT OF TRANSPORTATION	DETAIL OF STORM SEWER CONNECTION TO EXISTING SEWER			F.A.P. RTE.	SECTION	COUNTY	TOTAL SHEETS / SHEET NO.
		DRAWN -	REVISED - R. SHAH 09-09-94					•	2013-038B-R	COOK	821 / 789
	PLOT SCALE =	CHECKED -	REVISED - R. SHAH 10-25-94					BD500-01 (BD-7)		CONTRACT NO. 60J16	
	PLOT DATE = 6/23/2014	DATE - 07-25-90	REVISED - R. SHAH 06-12-96		SCALE: NONE	SHEET NO. 1 OF 1 SHEETS	STA. TO STA.	FED. ROAD DIST. NO. 1	ILLINOIS	FED. AID PROJECT	

• 372/373/IL 171 (SB)

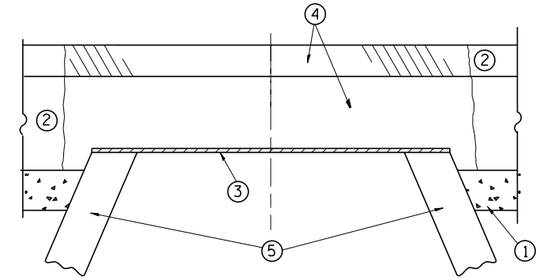

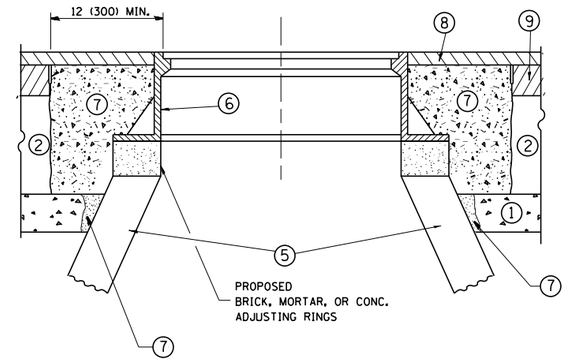

CONSTRUCTION PROCEDURES

STAGE 1 (BEFORE PAVEMENT MILLING)

A) REMOVE A MINIMUM OF 12 (300) OF THE PAVEMENT FROM AROUND THE STRUCTURE.
B) REMOVE THE EXISTING FRAME AND LID FROM THE STRUCTURE.
C) COVER THE STRUCTURE OPENING WITH A 36 (900) DIAMETER METAL PLATE.
D) BACKFILL WITH CRUSHED STONE AND A MINIMUM 1½ (40) THICK HMA SURFACE MIX APPROVED BY THE ENGINEER.

STAGE 2 (AFTER PAVEMENT MILLING)

A) REMOVE THE HMA SURFACE MIX AND CRUSHED STONE.
B) INSTALL THE FRAME AND LID; ADJUST THE FRAME TO ITS FINAL SURFACE ELEVATION.
C) THE SURROUNDING SPACE SHALL BE FILLED WITH CLASS PP-1* CONCRETE TO THE ELEVATION OF THE SURFACE OF THE EXISTING BASE COURSE OR THE BINDER COURSE.

* UNLESS OTHERWISE SPECIFIED IN THE PLANS.

THE PROCEDURE EXPLAINED ABOVE SHALL CONFORM TO THE APPLICABLE PORTIONS OF SECTIONS 353, 406, 602, AND 603 OF THE STANDARD SPECIFICATIONS EXCEPT THAT "THE CONTRACTOR SHALL ADJUST THE STRUCTURES TO THE FINISHED PAVEMENT ELEVATION NO MORE THAN 5 CALENDAR DAYS PRIOR TO PLACEMENT OF THE FINAL LIFT OF SURFACE UNLESS APPROVED BY THE ENGINEER."

LEGEND

1. SUB-BASE GRANULAR MATERIAL
2. EXISTING PAVEMENT
3. 36 (900) DIAMETER METAL PLATE
4. PROPOSED CRUSHED STONE AND HMA SURFACE MIX
5. EXISTING STRUCTURE
6. FRAME AND LID (SEE NOTES)
7. CLASS PP-1* CONCRETE
8. PROPOSED HMA SURFACE COURSE
9. PROPOSED HMA BINDER COURSE

NOTES:

EXISTING BROKEN FRAMES AND LIDS SHALL BE REMOVED AND DISPOSED OF BY THE CONTRACTOR AND SHALL BE REPLACED AS DIRECTED BY THE ENGINEER. REPLACEMENT FRAMES AND LIDS WILL BE PAID FOR IN ACCORDANCE WITH ARTICLE 109.04 OF THE STANDARD SPECIFICATIONS UNLESS A SEPARATE PAY ITEM HAS BEEN PROVIDED.

IF THE EXISTING LIDS ARE OPEN, THE FRAME WILL BE ADJUSTED TO THE ELEVATION OF THE MILLED PAVEMENT SURFACE PRIOR TO THE MILLING OPERATION. THE FRAME WILL NOT BE REMOVED AND COVERED BY THE METAL PLATE.

CITY OF CHICAGO CASTINGS ARE THE PROPERTY OF THE CITY AND THE CONTRACTOR SHALL NOTIFY THE CITY FOR REMOVAL AND DISPOSITION OF THE CASTINGS.

THE METAL PLATE USED TO COVER THE STRUCTURE SHALL REMAIN THE PROPERTY OF THE CONTRACTOR.

WHEN STRUCTURES ARE TO BE ADJUSTED OR RECONSTRUCTED, THE LOWERING AND RAISING OF THE FRAMES AND LIDS WILL NOT BE PAID FOR SEPARATELY BUT WILL BE INCLUDED IN THE COST OF THE CORRESPONDING PAY ITEM.

LOCATION OF STRUCTURES:

THE CONTRACTOR WILL BE REQUIRED TO KEEP A RECORD OF THE LOCATIONS OF THE BURIED STRUCTURES ACCORDING TO THE STATION AND DISTANCE LEFT OR RIGHT OF THE CENTERLINE OF PAVEMENT. UPON COMPLETION OF THE WORK, THE CONTRACTOR WILL DELIVER THE RECORD TO THE ENGINEER.

BASIS OF PAYMENT:

REMOVING FRAMES AND LIDS ON DRAINAGE AND UTILITY STRUCTURES IN THE PAVEMENT PRIOR TO MILLING, AND ADJUSTING TO FINAL GRADE PRIOR TO PLACING THE SURFACE COURSE, WILL BE PAID FOR AT THE CONTRACT UNIT PRICE EACH FOR "FRAMES AND LIDS TO BE ADJUSTED (SPECIAL)."

THIS WORK WILL NOT BE PAID FOR WHEN DRAINAGE AND UTILITY STRUCTURES ARE SPECIFIED FOR PAYMENT AS STRUCTURE RECONSTRUCTION.

NEW FRAMES AND LIDS, WHEN SPECIFIED, WILL BE PAID FOR SEPARATELY.

DETAILS FOR FRAMES AND LIDS ADJUSTMENT WITH MILLING

ALL DIMENSIONS ARE IN INCHES (MILLIMETERS) UNLESS OTHERWISE SHOWN

FILE NAME = ...\D160J16-sht-D1-bd-08.dgn	USER NAME = tblank	DESIGNED - R. SHAH	REVISED - R. WIEDEMAN 05-14-04
		DRAWN -	REVISED - R. BORO 01-01-07
	PLOT SCALE =	CHECKED -	REVISED - R. BORO 03-09-11
	PLOT DATE = 6/23/2014	DATE - 10-25-94	REVISED - R. BORO 12-06-11

STATE OF ILLINOIS
DEPARTMENT OF TRANSPORTATION

DETAILS FOR
FRAMES AND LIDS ADJUSTMENT WITH MILLING

SCALE: NONE | SHEET NO. 1 OF 1 SHEETS | STA. TO STA.

F.A.P. RTE.	SECTION	COUNTY	TOTAL SHEETS	SHEET NO.
•	2013-038B-R	COOK	821	790
	BD600-03 (BD-8)	CONTRACT NO. 60J16		
FED. ROAD DIST. NO. 1	ILLINOIS	FED. AID PROJECT		

• 372/373/IL 171 (SB)

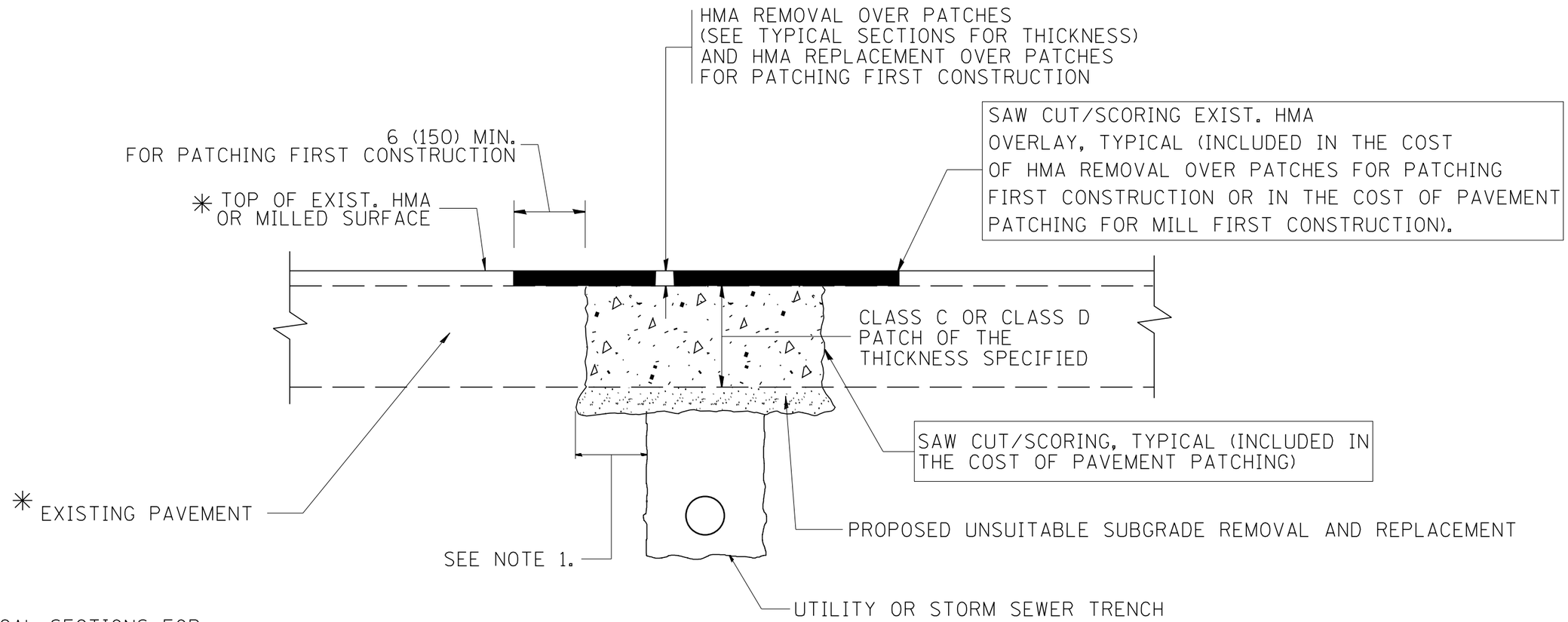

✳ SEE TYPICAL SECTIONS FOR THICKNESS AND MATERIALS

NOTES:

1. THE WIDTH OF THE FULL DEPTH PATCH OVER A TRENCH SHALL BE 12 (300) WIDER ON EACH SIDE OF THE TRENCH.
2. FOR METHOD OF MEASUREMENT AND BASIS OF PAYMENT, SEE RECURRING SPECIAL PROVISION "PATCHING WITH HOT-MIX ASPHALT OVERLAY REMOVAL".

SEQUENCE OF CONSTRUCTION (PATCHING FIRST)

1. REMOVE THE EXISTING HMA MATERIAL OVER THE AREA TO BE PATCHED.
2. REMOVE AND REPLACE WITH CLASS C OR D PATCH.
3. REPLACE HMA MATERIAL OVER THE AREA TO BE PATCHED.

SEQUENCE OF CONSTRUCTION (MILLING FIRST)

1. MILL HMA FIRST IF THERE IS AT LEAST $4\frac{1}{2}$ INCHES OR MORE OF HMA MATERIAL ON TOP OF THE EXISTING PAVEMENT OR IF THE PAVEMENT IS FULL DEPTH HMA. A MINIMUM OF 2 INCHES OF HMA MATERIAL SHALL BE IN PLACE AFTER MILLING.
2. REMOVE AND REPLACE WITH FULL DEPTH CLASS D PATCHES TO TOP OF MILLED SURFACE.

ALL DIMENSIONS ARE IN INCHES (MILLIMETERS) UNLESS OTHERWISE SHOWN.

FILE NAME = ...\D160J16-sht-D1-bd-22.dgn	USER NAME = tblank	DESIGNED - R. SHAH	REVISED - A. ABBAS 04-27-98	STATE OF ILLINOIS DEPARTMENT OF TRANSPORTATION	PAVEMENT PATCHING FOR HMA SURFACED PAVEMENT	F.A.P. RTE.	SECTION	COUNTY	TOTAL SHEETS	SHEET NO.
		DRAWN -	REVISED - R. BORO 01-01-07			•	2013-038B-R	COOK	821	791
	PLOT SCALE =	CHECKED -	REVISED - R. BORO 09-04-07			BD400-04 (BD-22)		CONTRACT NO. 60J16		
	PLOT DATE = 6/23/2014	DATE - 10-25-94	REVISED - K. ENG 10-27-08		SCALE: NONE / SHEET NO. 1 OF 1 SHEETS / STA. / TO STA.	FED. ROAD DIST. NO. 1	ILLINOIS	FED. AID PROJECT		

• 372/373/IL 171 (SB)

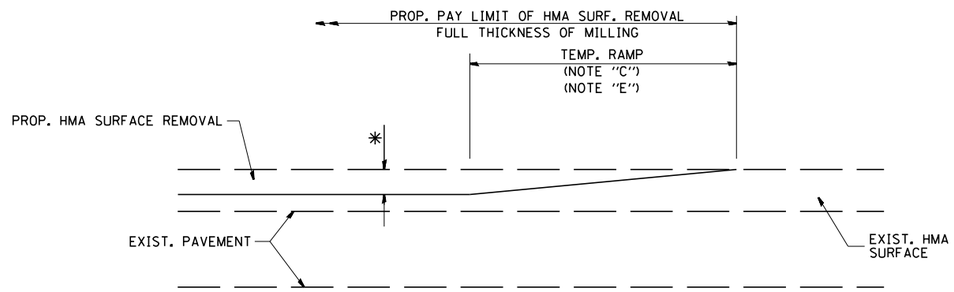

MILLED TEMPORARY RAMP

(FOR BUTT JOINT AND HMA TAPER SEE DETAIL BELOW)

OPTION 1

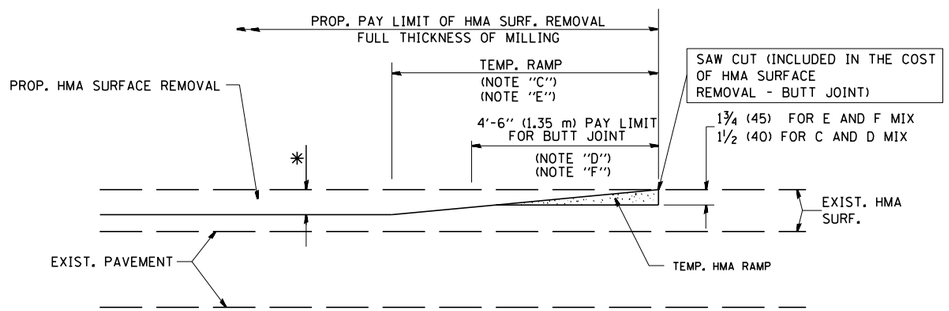

HMA CONSTRUCTED TEMPORARY RAMP

(FOR BUTT JOINT AND HMA TAPER SEE DETAIL BELOW)

OPTION 2

TYPICAL TEMPORARY RAMP

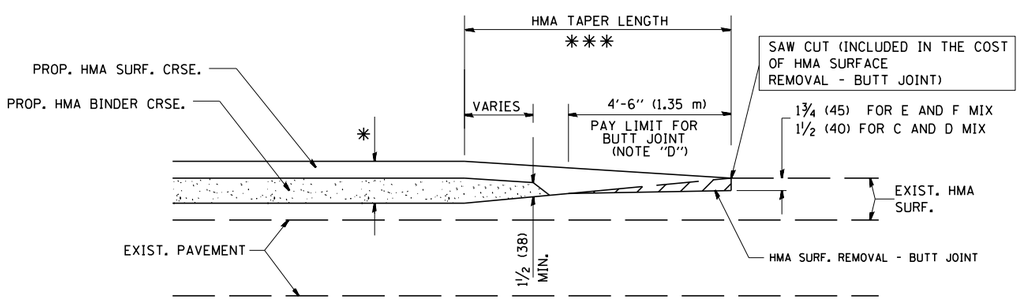

BUTT JOINT AND HMA TAPER

TYPICAL BUTT JOINT AND HMA TAPER FOR MILLING AND RESURFACING

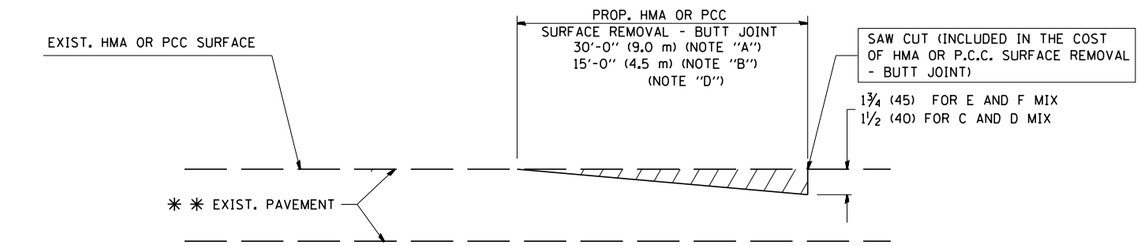

BUTT JOINT DETAIL

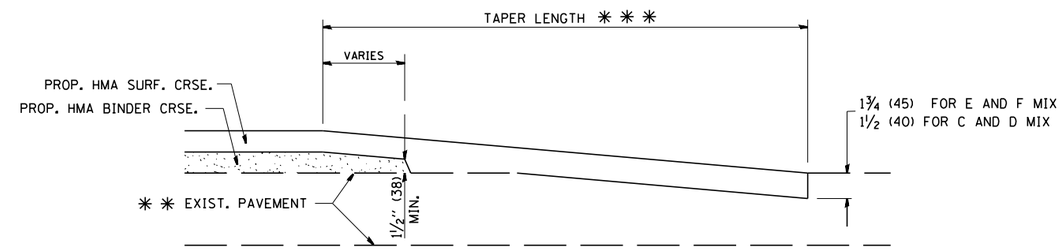

HMA TAPER DETAIL

TYPICAL BUTT JOINT AND HMA TAPER FOR RESURFACING ONLY

✳✳ PC CONCRETE, HMA OR HMA RESURFACED PAVEMENT.

NOTES

A: MAINLINE ROADWAYS AND MAJOR SIDE ROADS.

B: MINOR SIDE ROADS.

C: THE TEMP. RAMP SHALL BE CONSTRUCTED IMMEDIATELY UPON REMOVAL OF THE EXISTING HMA SURFACE.

D: THE BUTT JOINT SHALL BE CONSTRUCTED IMMEDIATELY PRIOR TO PLACING THE PROPOSED HMA COURSES.

E: TAPER THE TEMP. RAMP AT A RATE OF 3'-0" (900 mm) PER 1 INCH (25 mm) OF MILLING THICKNESS.

F: INSTALLATION AND REMOVAL OF THE 4'-6" (1.35 m) TEMP. RAMP IS INCLUDED IN COST OF HMA SURFACE REMOVAL - BUTT JOINT

G: SEE ARTICLE 406.08 AND 406.14 OF THE STANDARD SPECIFICATIONS FOR "HMA AND/OR PCC SURFACE REMOVAL, BUTT JOINT".

✳ SEE TYPICAL SECTIONS FOR MILLING THICKNESS.

✳✳✳ 20'-0" (6.1 m) PER 1 (25) RESURFACING (NOTE "A")
10'-0" (3.0 m) PER 1 (25) RESURFACING (NOTE "B")

BASIS OF PAYMENT:

THE BUTT JOINT WILL BE PAID FOR AT THE CONTRACT UNIT PRICE PER SQUARE YARD (SQUARE METER) FOR "HOT-MIX ASPHALT SURFACE REMOVAL - BUTT JOINT" OR FOR "PORTLAND CEMENT CONCRETE SURFACE REMOVAL- BUTT JOINT".

ALL DIMENSIONS ARE IN INCHES (MILLIMETERS) UNLESS OTHERWISE SHOWN.

FILE NAME = ...\D160J16-sht-D1-bd-32.dgn	USER NAME = tblank	DESIGNED - M. DE YONG	REVISED - R. SHAH 10-25-94	STATE OF ILLINOIS DEPARTMENT OF TRANSPORTATION
		DRAWN -	REVISED - A. ABBAS 03-21-97	
	PLOT SCALE =	CHECKED -	REVISED - M. GOMEZ 04-06-01	
	PLOT DATE = 6/23/2014	DATE - 06-13-90	REVISED - R. BORO 01-01-07	

BUTT JOINT AND HMA TAPER DETAILS

SCALE: NONE | SHEET NO. 1 OF 1 SHEETS | STA. | TO STA.

F.A.P. RTE.	SECTION	COUNTY	TOTAL SHEETS	SHEET NO.
•	2013-038B-R	COOK	821	792
	BD400-05 BD32	CONTRACT NO. 60J16		

FED. ROAD DIST. NO. 1 | ILLINOIS | FED. AID PROJECT

• 372/373/IL 171 (SB)

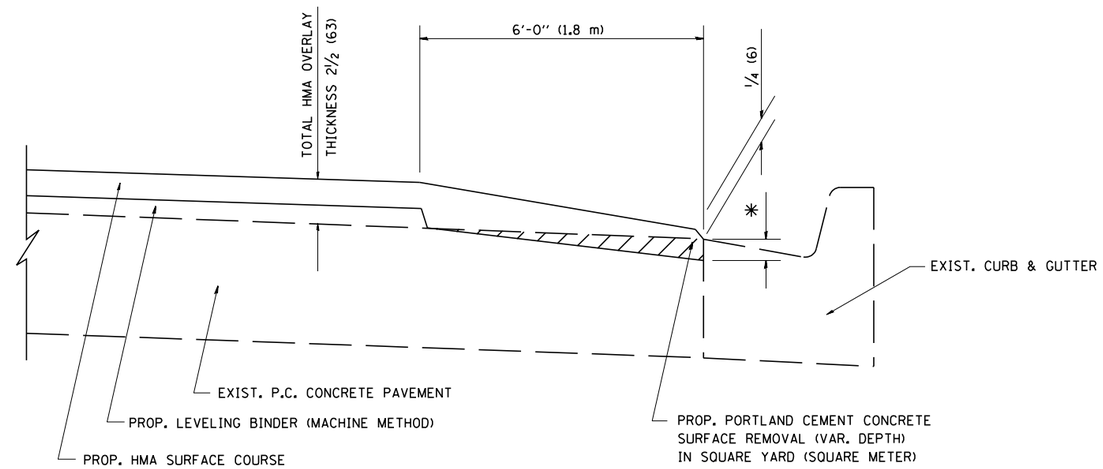

HMA TAPER AT EDGE OF P.C.C PAVEMENT

HMA SURFACE		LEVELING BINDER	
MIX	THICKNESS	THICKNESS	* MILLING AT GUTTER FLAG
C OR D	1½ (38)	1 (25)	1¼ (33)
F	1¾ (44)	¾ (19)	1½ (38)

ALL DIMENSIONS ARE IN INCHES (MILLIMETERS) UNLESS OTHERWISE SHOWN.

FILE NAME = ...\D160J16-sht-D1-bd-33.dgn	USER NAME = tblank	DESIGNED - R. SHAH	REVISED - R. SHAH 10-25-94	STATE OF ILLINOIS DEPARTMENT OF TRANSPORTATION
		DRAWN - JIS	REVISED - A. ABBAS 05-05-99	
	PLOT SCALE =	CHECKED - A. ABBAS	REVISED - E. GOMEZ 12-21-00	
	PLOT DATE = 6/23/2014	DATE - 09-10-94	REVISED - R. BORO 01-01-07	

HMA TAPER AT EDGE OF P.C.C. PAVEMENT

SCALE: NONE | SHEET NO. 1 OF 1 SHEETS | STA. | TO STA.

F.A.P. RTE.	SECTION	COUNTY	TOTAL SHEETS	SHEET NO.
•	2013-038B-R	COOK	821	793
BD400-06 (BD33)		CONTRACT NO. 60J16		
FED. ROAD DIST. NO. 1	ILLINOIS	FED. AID PROJECT		

• 372/373/IL 171 (SB)

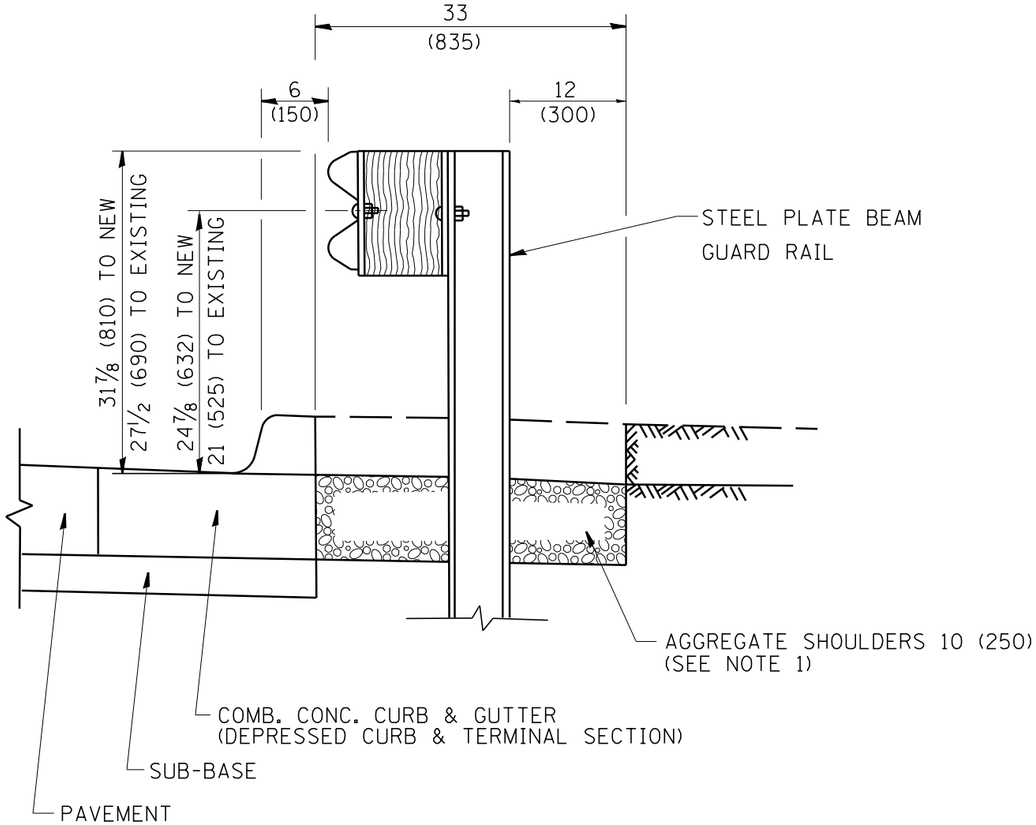

SECTION A-A

NOTES:

1. THE AGGREGATE SHOULDER, 10" OR HMA SHOULDER, 6" (IF REQUIRED) SHALL EXTEND UNDER THE TRAFFIC BARRIER TERMINAL.
2. "EXISTING" GUARDRAIL REFERS TO CONNECTING TERMINAL SECTION TO GUARD RAILING PRIOR TO THE MIDWEST GUARDRAIL SYSTEM.
3. THE CONTRACTOR SHALL VERIFY THE TYPE/HEIGHT OF GUARDRAIL IN-PLACE BEFORE ORDERING THE NEW TERMINAL SECTION. COST INCLUDED WITH THE COST OF THE TERMINAL. THE TERMINAL SECTION HEIGHT TO BE PLACED MUST MATCH THE HEIGHT OF THE IN-PLACE GUARDRAIL.

DETAILS FOR STEEL PLATE BEAM GUARD RAIL ADJACENT TO CURB AND GUTTER

[FOR ROADWAY SPEED 35 MPH (60 kmh) TO 45 MPH (70 kmh)]

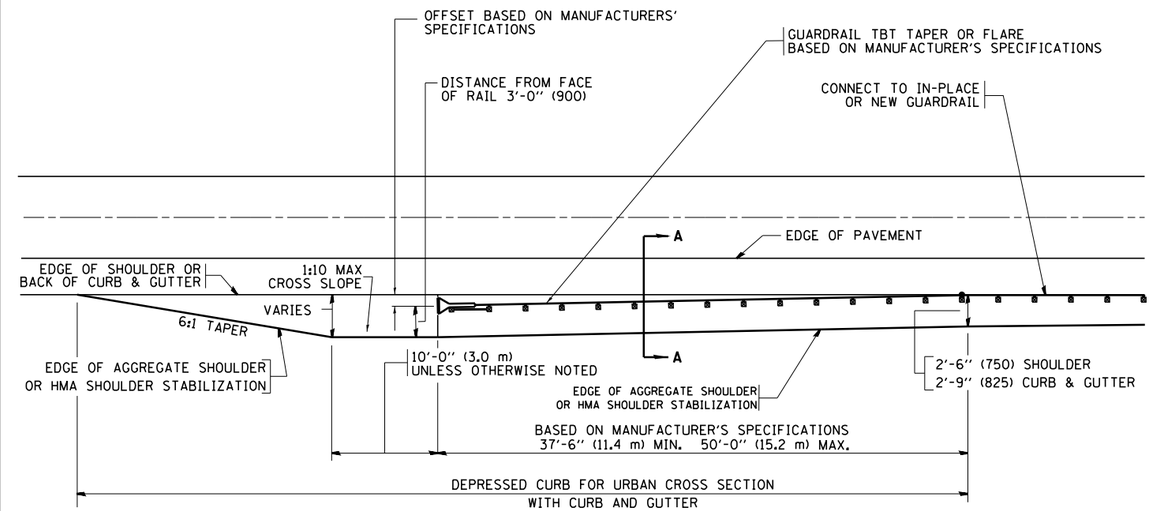

DEPRESSED CURB AND GUTTER AND SHOULDER TREATMENT AT TBT TY. 1 SPL.

BASIS OF PAYMENT: HMA SHOULDERS 6 (150) (IF REQUIRED) WILL BE PAID FOR AT THE CONTRACT UNIT PRICE PER SQUARE YARD (SQUARE METER) FOR "HOT-MIX ASPHALT SHOULDERS 6" (150 mm)".

STEEL PLATE BEAM GUARD RAIL AND TRAFFIC BARRIER TERMINAL, OF THE TYPE SPECIFIED WILL BE PAID FOR SEPARATELY.

TBT = TRAFFIC BARRIER TERMINAL

ALL DIMENSIONS ARE IN INCHES (MILLIMETERS) UNLESS OTHERWISE SHOWN.

FILE NAME = ...\D160J16-sht-01-bd-34.dgn	USER NAME = tblank	DESIGNED - M. DE YONG	REVISED - E. GOMEZ 08-28-00	STATE OF ILLINOIS DEPARTMENT OF TRANSPORTATION	DETAILS FOR DEPRESSED CURB & GUTTER AND SHOULDER TREATMENT AT TBT TY 1 SPL.
		DRAWN -	REVISED - R. BORO 01-01-07		
	PLOT SCALE =	CHECKED -	REVISED - R. BORO 12-08-2008		
	PLOT DATE = 6/23/2014	DATE - 09-22-90	REVISED - R. BORO 09-14-2009		SCALE: NONE SHEET NO. 1 OF 1 SHEETS STA. TO STA.

F.A.P. RTE.	SECTION	COUNTY	TOTAL SHEETS	SHEET NO.
•	2013-038B-R	COOK	821	794
	BD600-10 (BD 34)	CONTRACT NO. 60J16		
FED. ROAD DIST. NO. 1	ILLINOIS	FED. AID PROJECT		

• 372/373/IL 171 (SB)

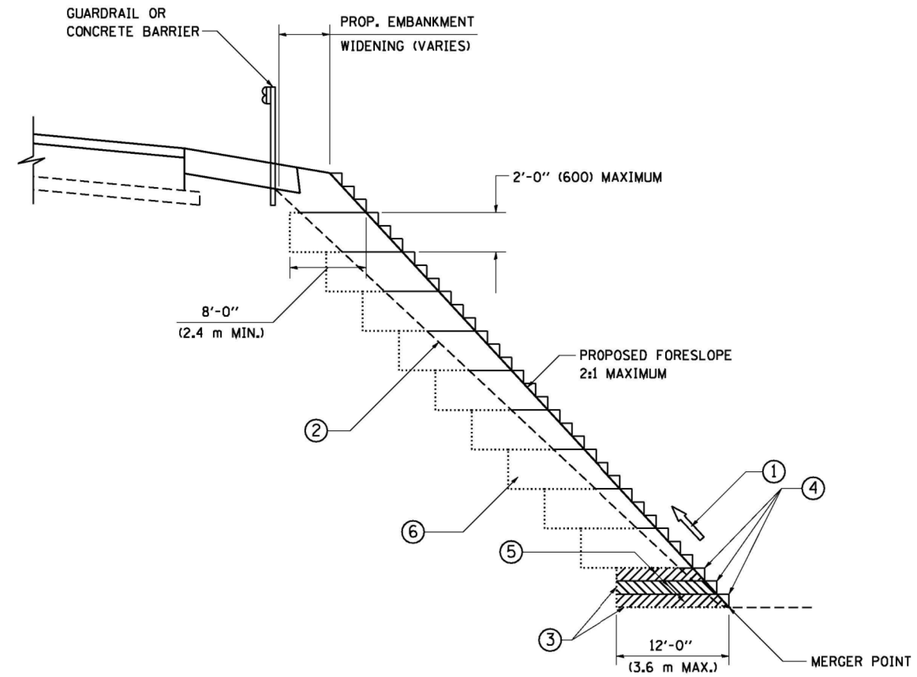

TYPICAL BENCHING DETAIL FOR EMBANKMENT

NOTES:

1. CONSTRUCT SUCCEEDING BENCH CUTS AND EMBANKMENT PLACEMENT AND COMPACTION FROM BOTTOM TO TOP IN STAIRSTEP FASHION.
2. EXISTING FORESLOPE PREPARED IN ACCORDANCE WITH ARTICLE 205.03 OF THE STANDARD SPECIFICATIONS.
3. BENCH CUT EXISTING SLOPE TYPICAL FOR EACH STEP.
4. TRIM TO FINAL SLOPE.
5. EQUAL 8-INCH (200) LIFTS OF EMBANKMENT COMPACTED IN ACCORDANCE WITH ARTICLE 205.05 OF THE STANDARD SPECIFICATIONS.
6. EXCAVATION OF BENCH CUTS WITHIN EXISTING EMBANKMENT WILL BE PAID FOR AT THE CONTRACT UNIT PRICE PER CUBIC METER OR CUBIC YARD FOR "EARTH EXCAVATION". THIS PRICE WILL INCLUDE ALL LABOR AND MATERIAL, NO ADDITIONAL COMPENSATION WILL BE ALLOWED.
7. SLOPES SHALL BE BENCHED ACCORDING TO THIS DETAIL WHEN THE SLOPE IS STEEPER THAN 4:1 AND THE HEIGHT IS GREATER THAN 5' (1.5 m).

ALL DIMENSIONS ARE IN INCHES (MILLIMETERS) UNLESS OTHERWISE SHOWN.

FILE NAME = W:\diststd\22x34\bd51.dgn	USER NAME = gaglienobt	DESIGNED -	REVISED -
		DRAWN - CADD	REVISED -
	PLOT SCALE = 50.0000 ' / IN.	CHECKED - S.E.B.	REVISED -
	PLOT DATE = 1/4/2008	DATE - 06-16-04	REVISED -

STATE OF ILLINOIS
DEPARTMENT OF TRANSPORTATION

BENCHING DETAIL
FOR EMBANKMENT WIDENING

SCALE: NONE | SHEET NO. 1 OF 1 SHEETS | STA. | TO STA.

F.A.P. RTE.	SECTION	COUNTY	TOTAL SHEETS	SHEET NO.
•	2013-038B-R	COOK	821	795
	BD-51	CONTRACT NO. 60J16		
FED. ROAD DIST. NO. 1	ILLINOIS	FED. AID PROJECT		

• 372/373/IL 171 (SB)

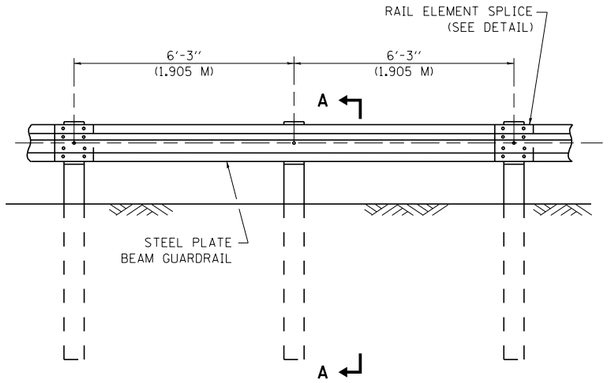

ELEVATION

TYPE A

6'-3" (1.905 M) TYPICAL POST SPACING

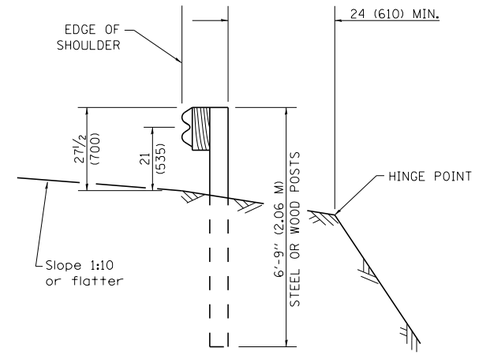

SECTION A-A

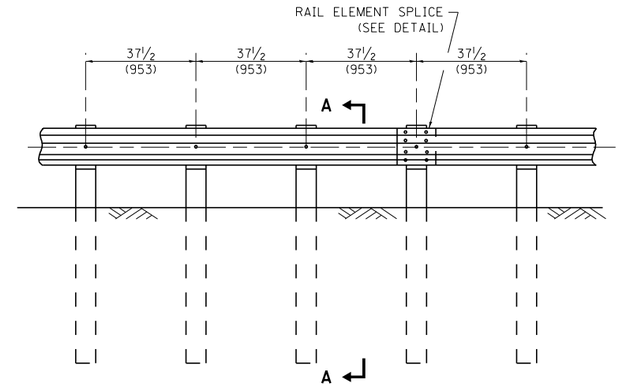

ELEVATION

TYPE A

37½ (953) CLOSED POST SPACING

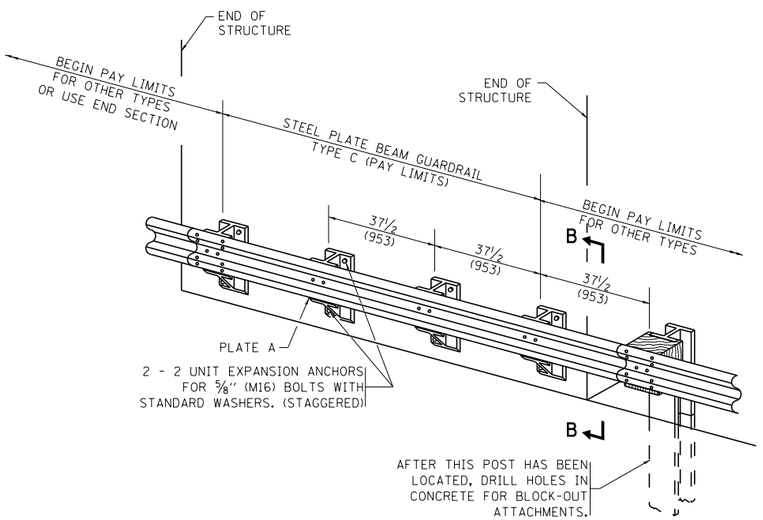

TYPE C

37½ (953) BLOCK-OUT SPACING

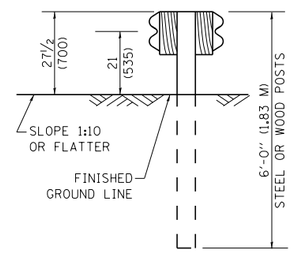

SECTION C-C

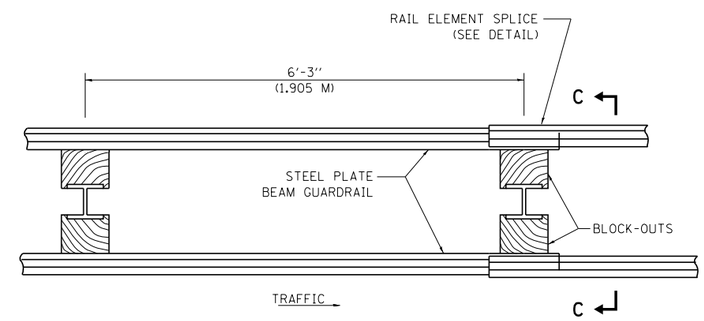

PLAN

TYPE D

DOUBLE STEEL PLATE BEAM GUARDRAIL
6'-3" (1.905 M) TYPICAL POST SPACING

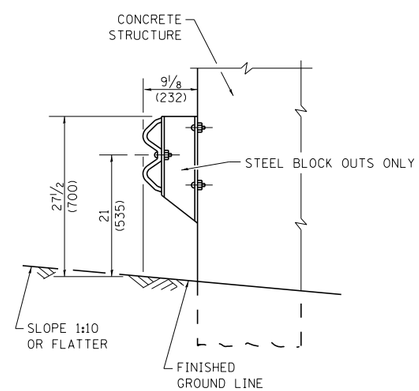

SECTION B-B

GENERAL NOTES

ALL SLOPE RATIOS ARE EXPRESSED AS UNITS OF VERTICAL DISPLACEMENT TO UNITS OF HORIZONTAL DISPLACEMENT (V:H).

ALL DIMENSIONS ARE IN INCHES (MILLIMETERS) UNLESS OTHERWISE SHOWN.

THE EXISTING STEEL POSTS MAY BE DRILLED TO MATCH THE BOLT PATTERN SHOWN HEREIN FOR THE WOOD BLOCK-OUT, OR A NEW STEEL POST SHALL BE PROVIDED.

THIS DETAIL IS APPLICABLE TO THE GUARDRAIL SYSTEM USED PRIOR TO JANUARY 1, 2007. FOR DETAILS ON THE MIDWEST GUARDRAIL SYSTEM, SEE STANDARD 630001.

FILE NAME = ...\D160J16-sht-D1-bm-21a.dgn	USER NAME = tblank	DESIGNED -	REVISED - 10-31-06	STATE OF ILLINOIS DEPARTMENT OF TRANSPORTATION
		DRAWN -	REVISED -	
	PLOT SCALE =	CHECKED -	REVISED -	
	PLOT DATE = 6/23/2014	DATE -	REVISED -	

REMOVE AND REERECT
STEEL PLATE BEAM GUARDRAIL

SCALE: NONE | SHEET NO. 1 OF 4 SHEETS | STA. | TO STA.

F.A.P. RTE.	SECTION	COUNTY	TOTAL SHEETS	SHEET NO.
•	2013-038B-R	COOK	821	796
	BM-21	CONTRACT NO. 60J16		

FED. ROAD DIST. NO. 1 | ILLINOIS | FED. AID PROJECT

• 372/373/IL 171 (SB)

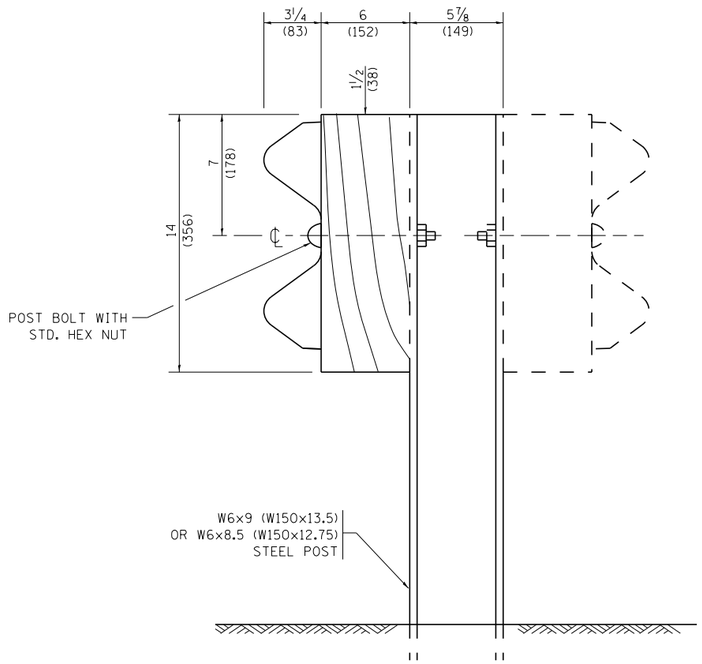

STEEL POST CONSTRUCTION

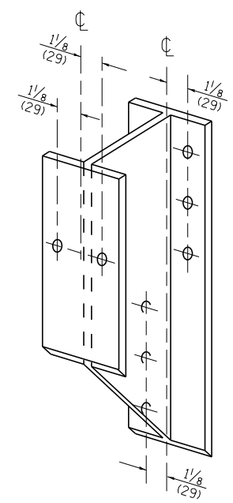

STEEL BLOCK-OUT DETAIL

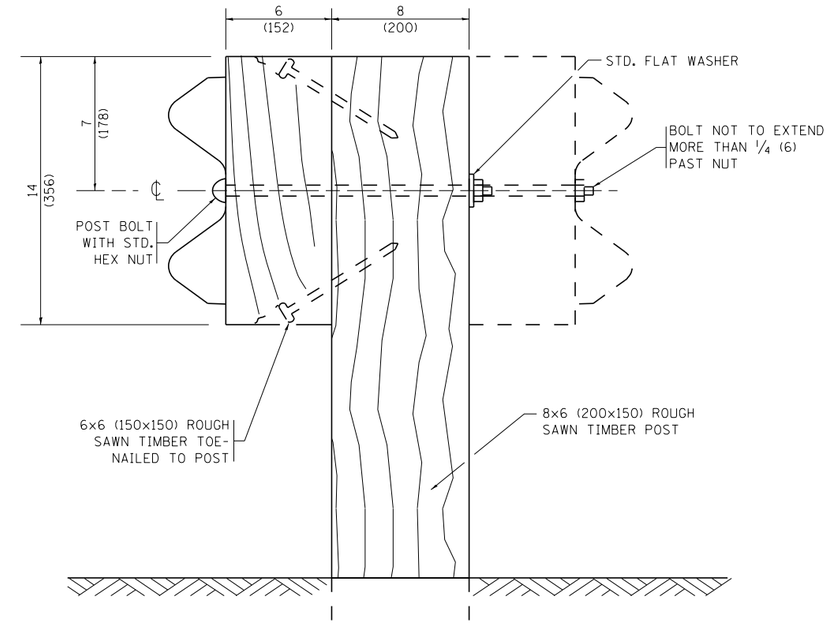

WOOD POST CONSTRUCTION

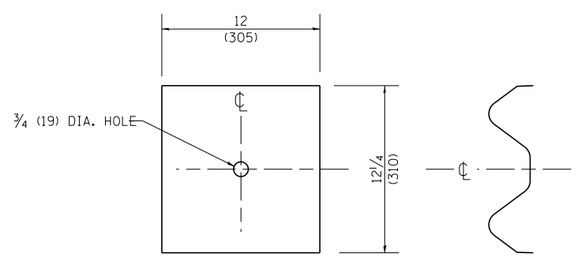

NOTE:

PLATE A SHALL BE PLACED BETWEEN RAIL ELEMENT AND BLOCK-OUT AT NON-SPLICE MOUNTING POINTS ONLY WHEN STEEL BLOCK-OUTS ARE USED.

PLATE A

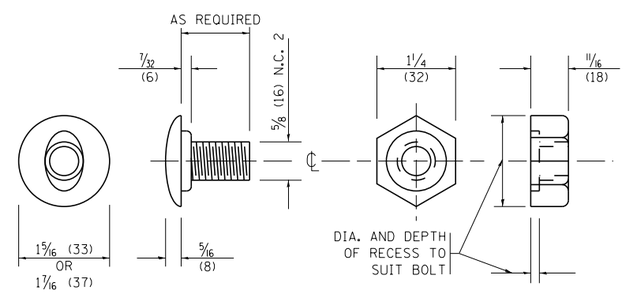

POST OR SPLICE BOLT & NUT

FILE NAME = ...\D160J16-sht-D1-bm-21b.dgn	USER NAME = tblank	DESIGNED -	REVISED - 10-31-06	STATE OF ILLINOIS DEPARTMENT OF TRANSPORTATION	REMOVE AND REERECT STEEL PLATE BEAM GUARDRAIL			F.A.P. RTE.	SECTION	COUNTY	TOTAL SHEETS / SHEET NO.
		DRAWN -	REVISED -					•	2013-038B-R	COOK	821 / 797
	PLOT SCALE =	CHECKED -	REVISED -					BM-21		CONTRACT NO. 60J16	
	PLOT DATE = 6/23/2014	DATE -	REVISED -		SCALE: NONE	SHEET NO. 2 OF 4 SHEETS	STA. TO STA.	FED. ROAD DIST. NO. 1	ILLINOIS	FED. AID PROJECT	

• 372/373/IL 171 (SB)

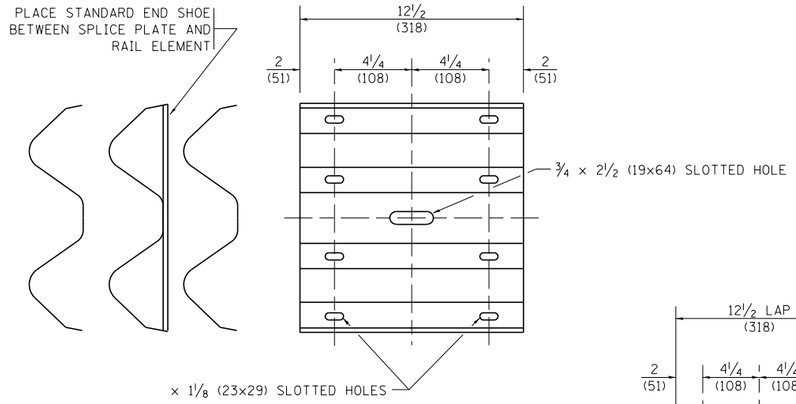

SPLICE PLATE

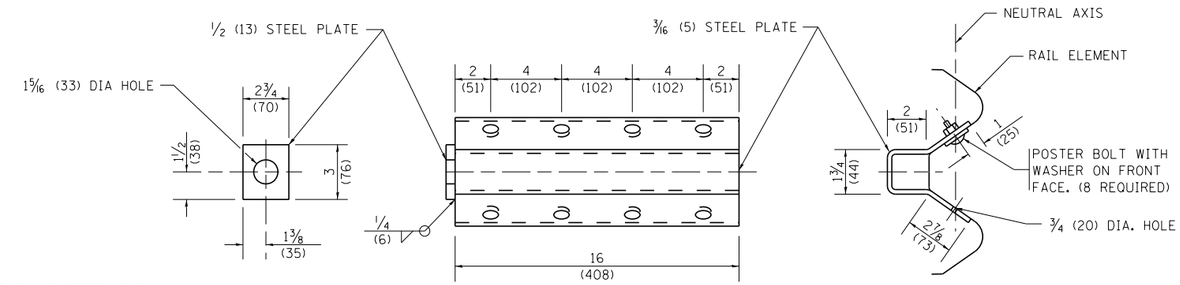

NOTE:

ANCHOR PLATE T SHALL BE USED TO ATTACH CABLE ASSEMBLY TO GUARDRAIL WHEN REQUIRED ON TRAFFIC BARRIER TERMINALS.

ANCHORE PLATE T DETAILS

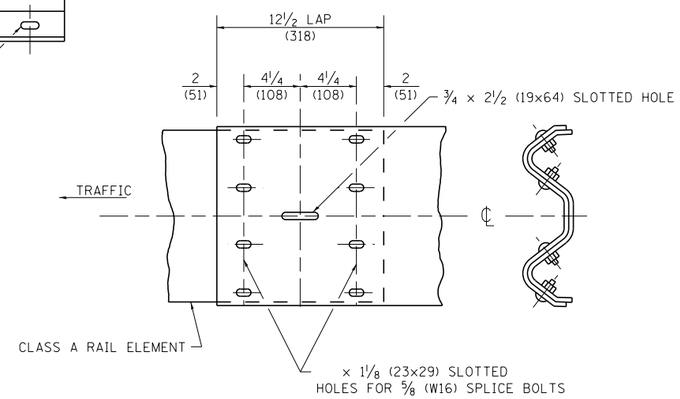

RAIL ELEMENT SPLICE

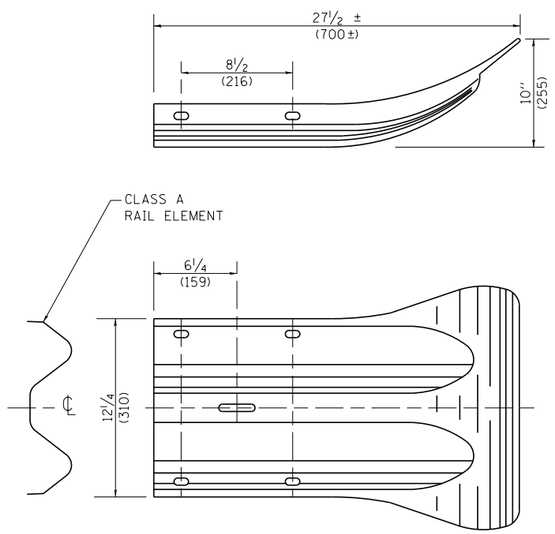

END SECTION

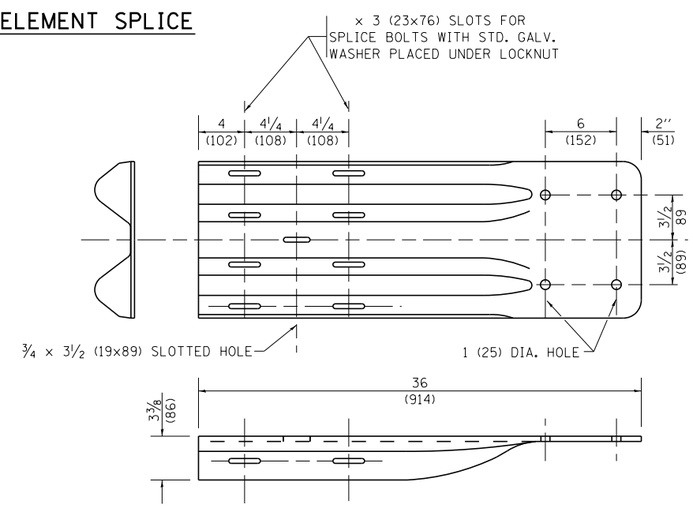

END SHOE

NOTE:

WHEN END SHOE IS ATTACHED TO A BRIDGE PARAPET WHICH HAS AN EXPANSION JOINT, THE BOLTS SHALL BE PROVIDED WITH A LOCKNUT OR DOUBLE NUT AND SHALL BE TIGHTENED ONLY TO A POINT THAT WILL ALLOW GUARDRAIL MOVEMENT.

THE STANDARD END SHOE SHALL BE ATTACHED TO THE CONCRETE WITH PRE-DRILLED OR SELF-DRILLING ANCHOR BOLTS. THE ANCHOR CONE SHALL BE SET FLUSH WITH THE SURFACE OF THE CONCRETE.

EXTERNALLY THREADED STUDS PROTRUDING FROM THE SURFACE OF THE CONCRETE WILL NOT BE PERMITTED.

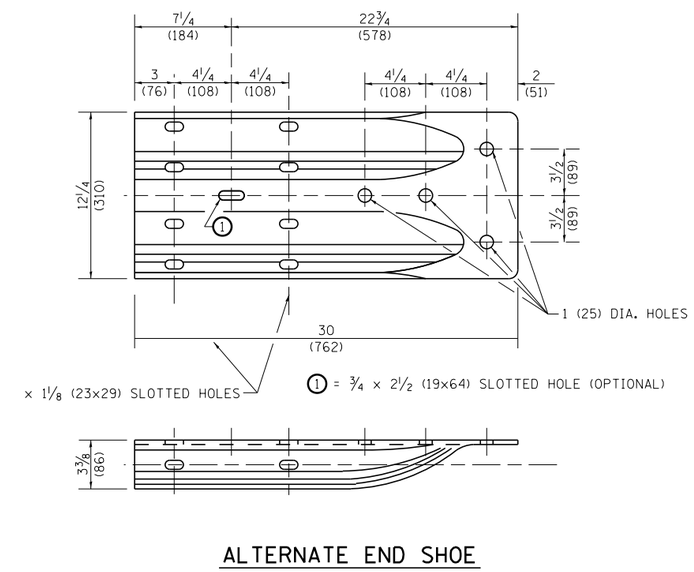

ALTERNATE END SHOE

FILE NAME = ...\D160J16-sht-D1-bm-21c.dgn	USER NAME = tblank	DESIGNED -	REVISED - 10-31-06	STATE OF ILLINOIS DEPARTMENT OF TRANSPORTATION	REMOVE AND REERECT STEEL PLATE BEAM GUARDRAIL	F.A.P. RTE.	SECTION	COUNTY	TOTAL SHEETS / SHEET NO.
		DRAWN -	REVISED -			•	2013-038B-R	COOK	821 / 798
	PLOT SCALE =	CHECKED -	REVISED -				BM-21	CONTRACT NO. 6OJ16	
	PLOT DATE = 6/23/2014	DATE -	REVISED -		SCALE: NONE / SHEET NO. 3 OF 4 SHEETS / STA. / TO STA.	FED. ROAD DIST. NO. 1	ILLINOIS	FED. AID PROJECT	

• 372/373/IL 171 (SB)

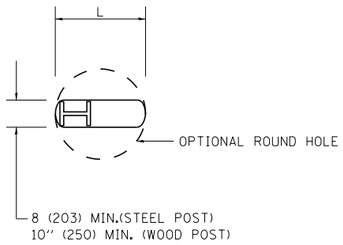

PLAN

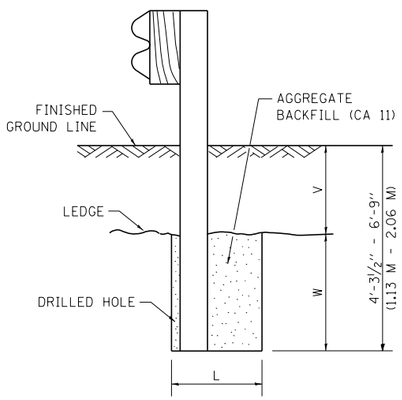

NOTE:

LEDGE LINE IS TOP OF ROCK LEDGE OR HARD SLAG FILL.

ELEVATION

FOOTING FOR POST WHEN IMPERVIOUS MATERIAL IS ENCOUNTERED

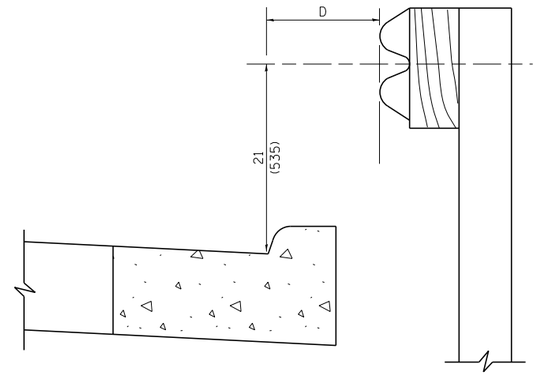

NOTE:

IF IT IS NECESSARY FOR D TO BE MORE THAN 12 (300) AND LESS THAN 10'-0" (3.0 M) TYPE M-2 (M-5) CURB AND GUTTER (STD. 606001) SHALL BE USED IN FRONT OF AND IN ADVANCE OF THE GUARDRAIL.

GUARDRAIL PLACED BEHIND CURB

(D = 0 DESIRABLE TO 12 (300) MAXIMUM)

V	W	L	
		STEEL POST	WOOD POST
0 - 18 (0 - 460)	24 (610)	21 (530)	23 (580)
>18 - 41.5 (> 460 - 825)	12 (305)	8 (203)	10 (250)
>41.5 - 53.5 (> 825 - 1.13 M)	12 - 0 (350 - 0)	8 (203)	10 (250)

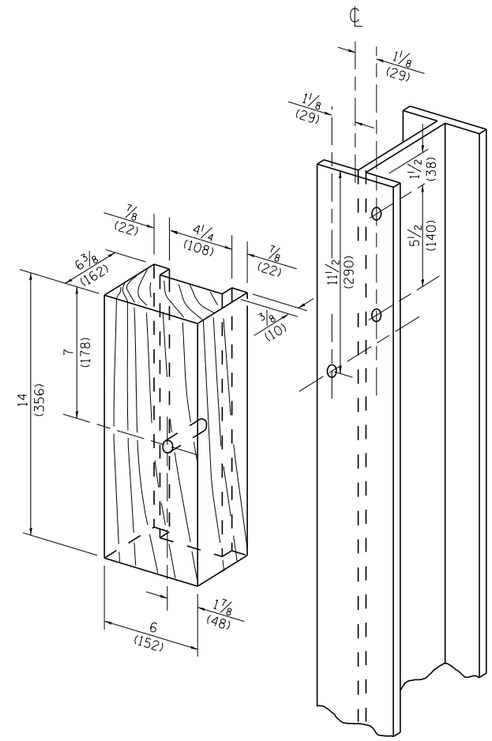

WOOD BLOCK-OUT AND STEEL POST DETAILS

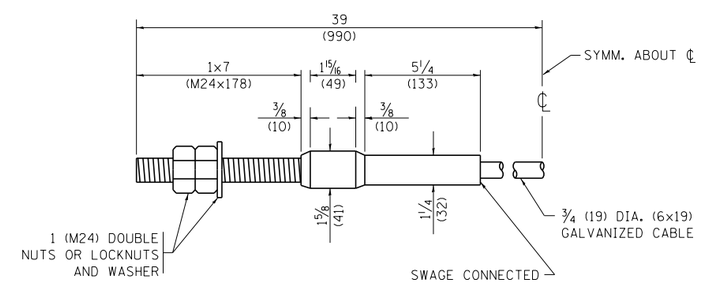

CABLE ASSEMBLY

(40,000 LBS (18,100 KG) MIN. BREAKING STRENGTH)
TIGHTEN TO TAUT TENSION

FILE NAME = ...\D160J16-sht-D1-bm-21d.dgn	USER NAME = tblank	DESIGNED -	REVISED - 10-31-06	STATE OF ILLINOIS DEPARTMENT OF TRANSPORTATION
		DRAWN -	REVISED -	
	PLOT SCALE =	CHECKED -	REVISED -	
	PLOT DATE = 6/23/2014	DATE -	REVISED -	

REMOVE AND REERECT STEEL PLATE BEAM GUARDRAIL

SCALE: NONE | SHEET NO. 4 OF 4 SHEETS | STA. | TO STA.

F.A.P. RTE.	SECTION	COUNTY	TOTAL SHEETS	SHEET NO.
•	2013-038B-R	COOK	821	799
	BM-21	CONTRACT NO. 60J16		

FED. ROAD DIST. NO. 1 | ILLINOIS | FED. AID PROJECT

• 372/373/IL 171 (SB)

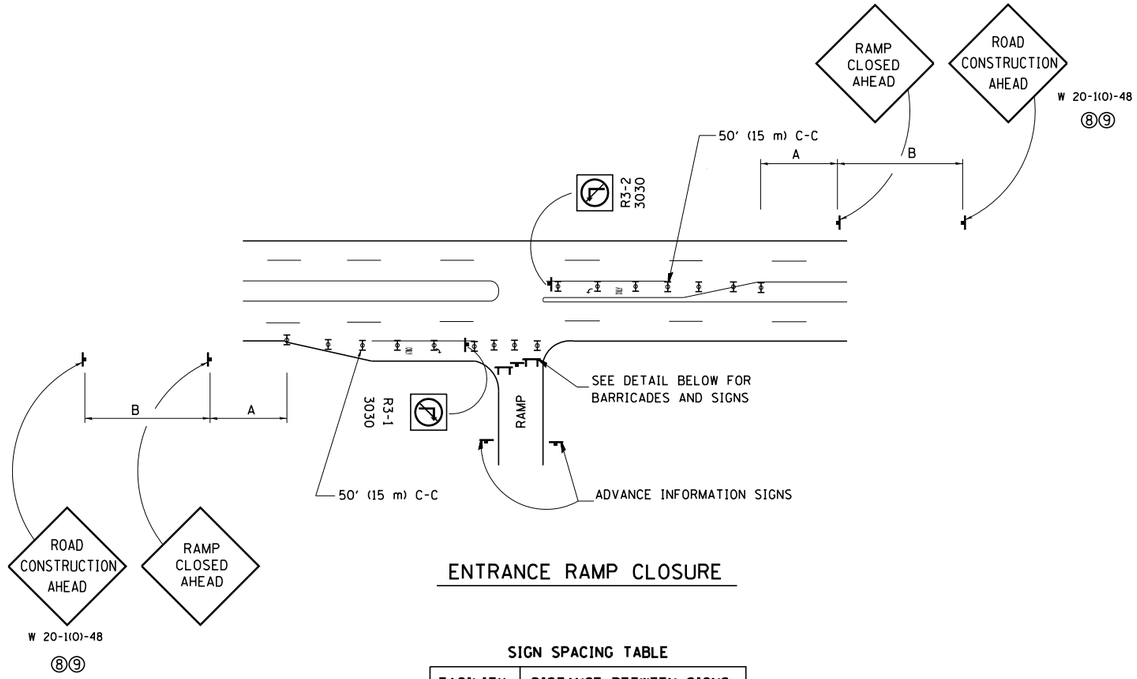

ENTRANCE RAMP CLOSURE

SIGN SPACING TABLE

FACILITY	DISTANCE BETWEEN SIGNS	
	A	B
EXPRESSWAY >24 HOURS	1000' (300 m)	1500' (450 m)
EXPRESSWAY ≤24 HOURS	500' (150 m)	500' (150 m)
ARTERIAL ≥45 MPH	350' (100 m)	350' (100 m)
ARTERIAL <45 MPH	150' (45 m)	150' (45 m)

DISTANCES MAY BE SHORTENED DEPENDING UPON THE PROXIMITY OF ADJACENT RAMPS OR INTERSECTIONS.

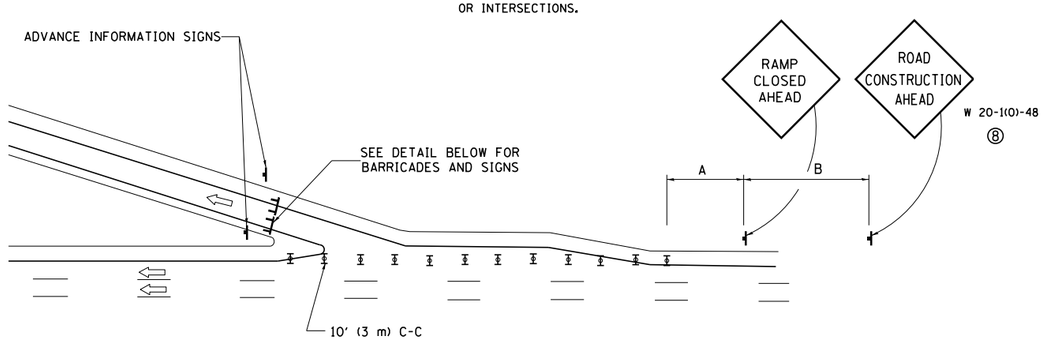

EXIT RAMP CLOSURE

SYMBOLS

TYPE II BARRICADE, DRUM OR VERTICAL BARRICADE WITH STEADY BURN MONO-DIRECTIONAL LIGHT

TYPE III BARRICADE WITH FLASHING LIGHT

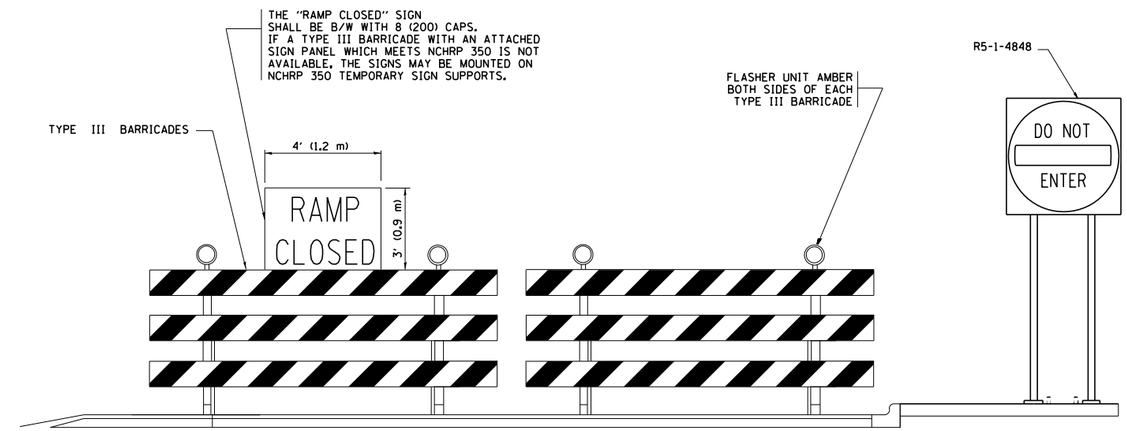

DETAIL FOR REQUIRED BARRICADES & SIGNS

RAMP CLOSURE ADVANCE WARNING SIGN

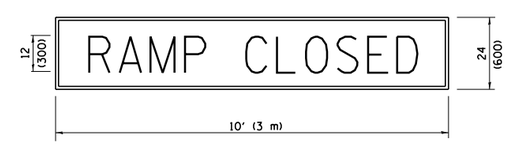

BLACK LEGEND ON ORANGE REFLECTORIZED BACKGROUND

1 (25) BORDER

THESE SIGNS ARE REQUIRED ON ALL THE EXIT GUIDE SIGNS FOR THE CLOSED EXIT RAMPS.

RAMP CLOSURE ADVANCE INFORMATION SIGN

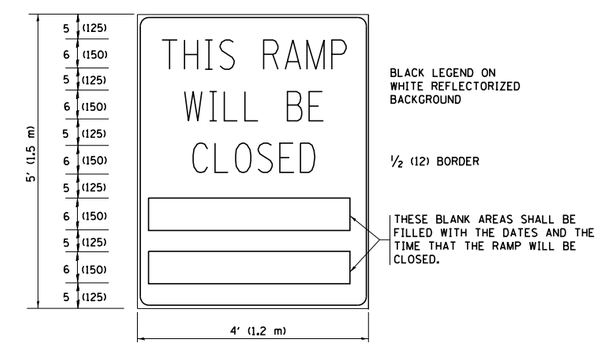

THESE SIGNS ARE REQUIRED ON BOTH SIDES OF THE RAMP, MINIMUM OF 1 WEEK IN ADVANCE OF THE CLOSURE.

GENERAL NOTES:

1. CONES MAY BE SUBSTITUTED FOR DRUMS OR TYPE II BARRICADES DURING DAY OPERATIONS. CONES SHALL BE A MINIMUM OF 28 (700) HIGH.
2. STEADY BURN LIGHTS WILL NOT BE REQUIRED FOR DAY OPERATIONS.
3. A FLAGGER SHALL BE POSITIONED AT EACH CLOSED RAMP THAT IS OPEN TO CONSTRUCTION VEHICLES.
4. ALL ROUTE MARKERS AND TRAILBLAZER ASSEMBLIES WHICH DIRECT MOTORISTS TO A CLOSED ENTRANCE RAMP SHALL BE COVERED.
5. THE SIGNING AND BARRICADING WHICH IS REQUIRED BY THIS DETAIL SHALL BE INCLUDED IN THE COST OF TRAFFIC CONTROL AND PROTECTION (EXPRESSWAYS).
6. AUTHORIZATION FROM THE DISTRICT'S BUREAU OF TRAFFIC IS REQUIRED FOR ALL RAMP CLOSURES.
7. THE RAMP CLOSURE ADVANCE INFORMATION SIGNS SHALL BE ERECTED IF THE CLOSURE TIME EXCEEDS TWENTY- FOUR 24 HOURS. ADDITIONAL ADVANCE WARNING SIGNS ON EXIT GUIDE SIGNING WILL BE REQUIRED FOR EXIT RAMP CLOSURES THAT EXCEED TWENTY FOUR 24 HOURS IN LENGTH.
8. ROAD CONSTRUCTION AHEAD SIGNS MAY BE OMITTED WHEN THIS DETAIL IS USED IN CONJUNCTION WITH OTHER TRAFFIC CONTROL THAT ALREADY INCLUDES A ROAD CONSTRUCTION AHEAD SIGN.
9. ARTERIAL ROAD CONSTRUCTION AHEAD SIGNS MAY BE OMITTED ON CLOSURES LESS THAN 24 HOURS IN DURATION.

ALL DIMENSIONS ARE IN INCHES (MILLIMETERS) UNLESS OTHERWISE SHOWN.

FILE NAME = ...\D160J16-sht-D1-tc-08.dgn	USER NAME = tblank	DESIGNED - DWS	REVISED - DWS/JAF 12-02	STATE OF ILLINOIS DEPARTMENT OF TRANSPORTATION	FREEWAY ENTRANCE AND EXIT RAMP CLOSURE DETAILS	F.A.P. RTE.	SECTION	COUNTY	TOTAL SHEETS / SHEET NO.
		DRAWN -	REVISED - JAF 02-06			•	(0707-608&611)HB-B	COOK	821 / 800
	PLOT SCALE =	CHECKED -	REVISED - SPB 01-07			TC-08		CONTRACT NO. 60J16	
	PLOT DATE = 6/23/2014	DATE - 02-83	REVISED - SPB 12-09		SCALE: NONE / SHEET NO. 1 OF 1 SHEETS / STA. TO STA.	FED. ROAD DIST. NO. 1	ILLINOIS	FED. AID PROJECT	

• 372/373/IL 171 (SB)