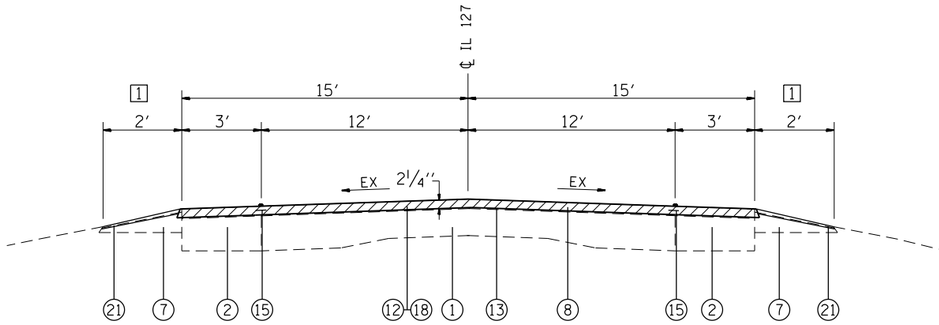

TYPICAL SECTION

MILLING DEPTH CHANGE STA. 526+70.00 TO STA. 526+85.00
STA. 526+85.00 TO STA. 527+12.37
BRIDGE OMISSION STA. 527+12.37 TO STA. 528+60.32 (SN 003-0061)
STA. 528+60.32 TO STA. 528+85.00
MILLING DEPTH CHANGE STA. 528+85.00 TO STA. 529+00.00
MILLING DEPTH CHANGE STA. 538+85.00 TO STA. 539+00.00
STA. 539+00.00 TO STA. 539+48.48
BRIDGE OMISSION STA. 539+48.48 TO STA. 542+67.56 (SN 003-0051)
STA. 542+67.56 TO STA. 543+15.00
MILLING DEPTH CHANGE STA. 543+15.00 TO STA. 543+30.00
MILLING DEPTH CHANGE STA. 549+15.00 TO STA. 549+30.00
STA. 549+30.00 TO STA. 550+65.59
BRIDGE OMISSION STA. 550+65.59 TO STA. 553+42.98 (SN 003-0057)
STA. 553+42.98 TO STA. 555+18.72
INTERSECTION TRANSITION STA. 53+67.16 TO STA. 56+72.00
STA. 56+72.00 TO STA. 59+44.77

TYPICAL SECTION NOTES

1. WIDTH OF AGGREGATE WEDGE SHOULDER, TYPE B SHALL EXTEND TO GUARDRAIL FACE WHEN GUARDRAIL IS PRESENT AND MAINTAIN A 10:1 SLOPE OR FLATTER.
2. FOR MILLING DEPTH CHANGE STATION LIMITS, SEE DETAIL "PAVING TRANSITON TYPE A - MILLING DEPTH CHANGE."
3. LIMITED DATA WAS AVAILABLE FOR LOCATIONS OF PAVEMENT DEPTHS AND WIDENING. LOCATIONS SHOWN ARE ARE APPROXIMATE ONLY.

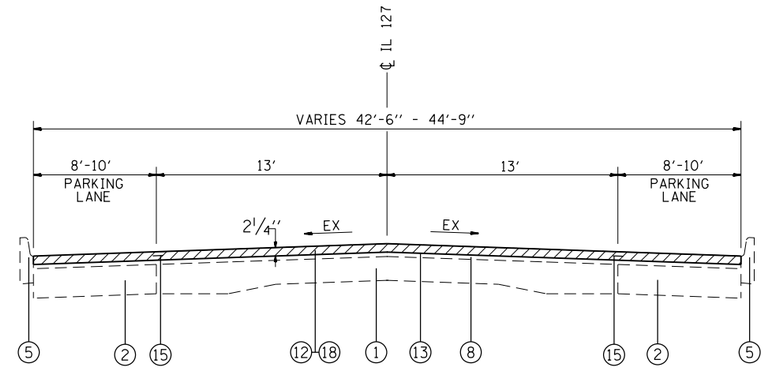

TYPICAL SECTION

STA. 87+40.09 TO STA. 93+43.99
INTERSECTION TRANSITION STA. 93+43.99 TO STA. 94+35.00

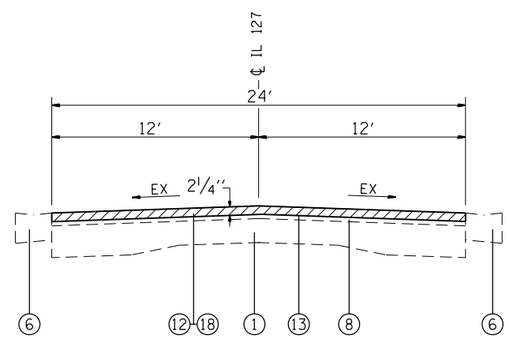

TYPICAL SECTION

STA. 62+33.69 TO STA. 76+01.54

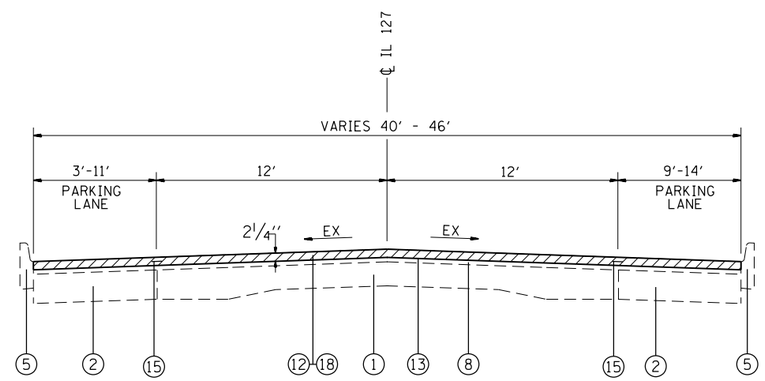

TYPICAL SECTION

STA. 79+46.13 TO STA. 87+40.09

LEGEND

1. EXISTING PAVEMENT
2. EXISTING PAVEMENT WIDENING
3. EXISTING SHOULDER
4. EXISTING COMBINATION CURB & GUTTER TYPE B-6.24
5. EXISTING CURB
6. EXISTING V GUTTER
7. EXISTING AGGREGATE SHOULDER
8. EXISTING HMA RESURFACING
8A. EXISTING WATERPROOFING MEMBRANE ¾″
9. PROPOSED PCC SURFACE REMOVAL 1 ¼″
10. PROPOSED HMA SURFACE REMOVAL 1 ¼″
11. PROPOSED HMA SURFACE REMOVAL 1 ½″
12. PROPOSED HMA SURFACE REMOVAL 2 ¼″
13. PROPOSED POLYMERIZED BITUMINOUS MATERIALS (PRIME COAT)
14. PROPOSED BITUMINOUS MATERIALS (PRIME COAT)
15. PROPOSED STRIP REFLECTIVE CRACK CONTROL TREATMENT
16. PROPOSED POLYMERIZED HMA SURFACE COURSE, MIX D, N90 1 ¼″
17. PROPOSED POLYMERIZED HMA SURFACE COURSE, MIX D, N90 1 ½″
18. PROPOSED POLYMERIZED HMA SURFACE COURSE, MIX D, N90 2 ¼″
19. PROPOSED HMA SHOULDERS, 1 ½″
20. PROPOSED HMA SHOULDERS, 2 ¼″
21. PROPOSED AGGREGATE WEDGE SHOULDER, TYPE B

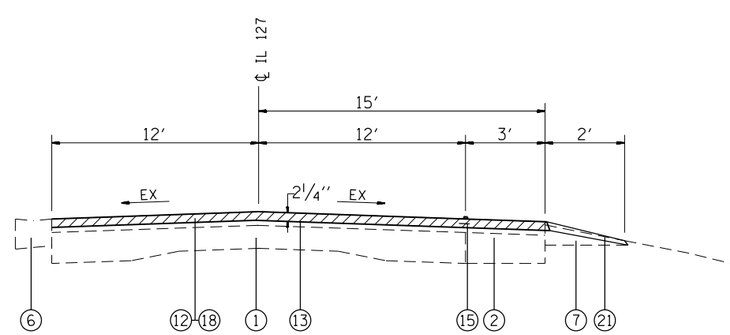

TYPICAL SECTION

STA. 59+44.77 TO STA. 62+33.69

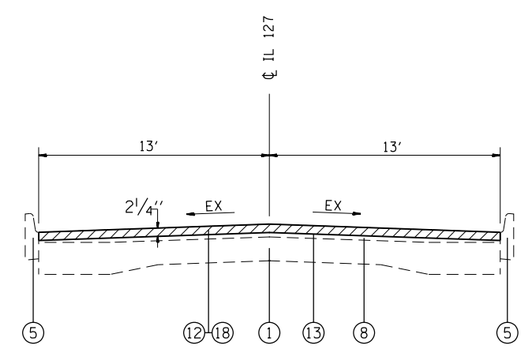

TYPICAL SECTION

STA. 76+01.54 TO STA. 79+46.13

FILE NAME =	USER NAME = btindall	DESIGNED -	REVISED -	STATE OF ILLINOIS DEPARTMENT OF TRANSPORTATION	TYPICAL SECTIONS	F.A.P. RTE.	SECTION	COUNTY	TOTAL SHEETS / SHEET NO.
H:\6513 IDOT D8 Var\6513.12 WO 12 Greenville Resurfacing\CADD Sheets\D876G79-sht-typical.dgn		DRAWN -	REVISED -			42	(139-1,36-1,110-1)RS-1	BOND	68 / 10
	PLOT SCALE = 100.0000 ′ / in.	CHECKED -	REVISED -					CONTRACT NO. 76G79	
Default	PLOT DATE = 6/13/2014	DATE -	REVISED -		SCALE: N.T.S. / SHEET 2 OF 4 SHEETS / STA. TO STA.		ILLINOIS FED. AID PROJECT		