TYPICAL SECTION - MAINLINE IL 148

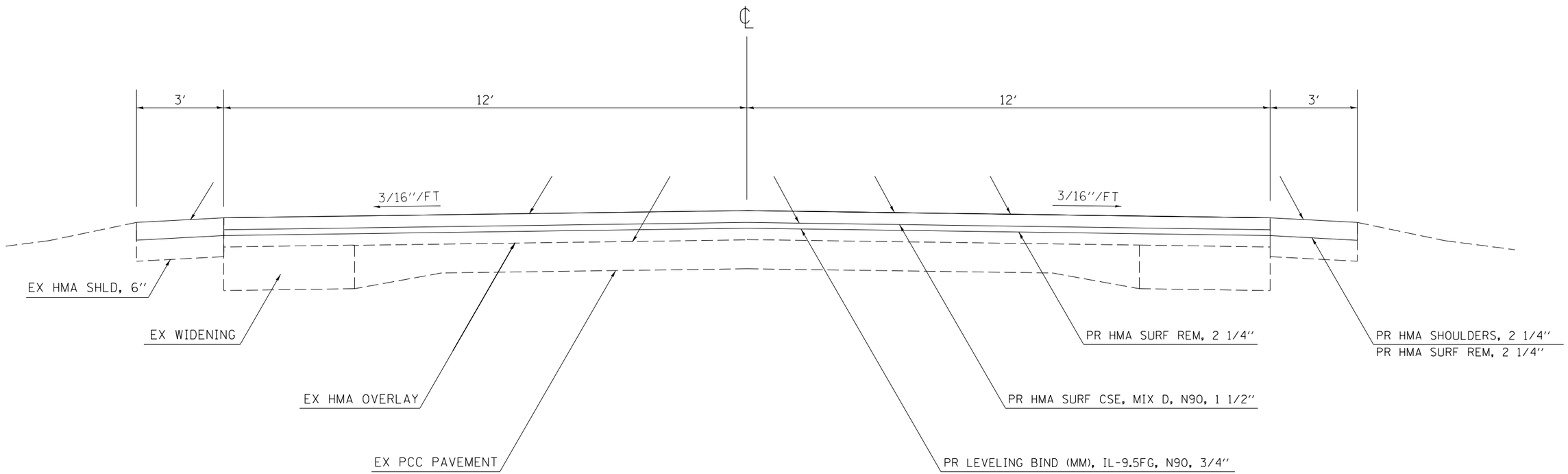

TO BE USED:

STA 17+81 (N) TO STA 39+70 (N)

STA 44+00 (N) TO STA 121+03 (N)

STA 41+78 (S) TO STA 91+43 (S)

FILE NAME = c:\pw_work\pwidot\stoverpg\d402026\78181-shta-cvr_sog_index.dgn	USER NAME = $USER$	DESIGNED -	REVISED -	STATE OF ILLINOIS DEPARTMENT OF TRANSPORTATION	TYPICAL SECTION – MAINLINE			F.A.P. RTE.	SECTION	COUNTY	TOTAL SHEETS	SHEET NO.
		DRAWN -	REVISED -					726	119(RS-1), 126(RS-11)	FRANKLIN	24	13
	PLOT SCALE = 100.0000 ′ / in.	CHECKED -	REVISED -							CONTRACT NO. 78181		
	PLOT DATE = 7/9/2014	DATE -	REVISED -		SCALE: NONE	SHEET NO. 6 OF 9 SHEETS	STA. TO STA.	FED. ROAD DIST. NO.	ILLINOIS	FED. AID PROJECT		