F.A.S. RTE.	SECTION	COUNTY	TOTAL SHEETS	SHEET NO.
2704	(11BR-1)BR	CLAY	38	1
	ILLINOIS	CONTRACT NO. 74654		

09-19-2025 LETTING ITEM 060

STATE OF ILLINOIS
DEPARTMENT OF TRANSPORTATION

D-97-013-14

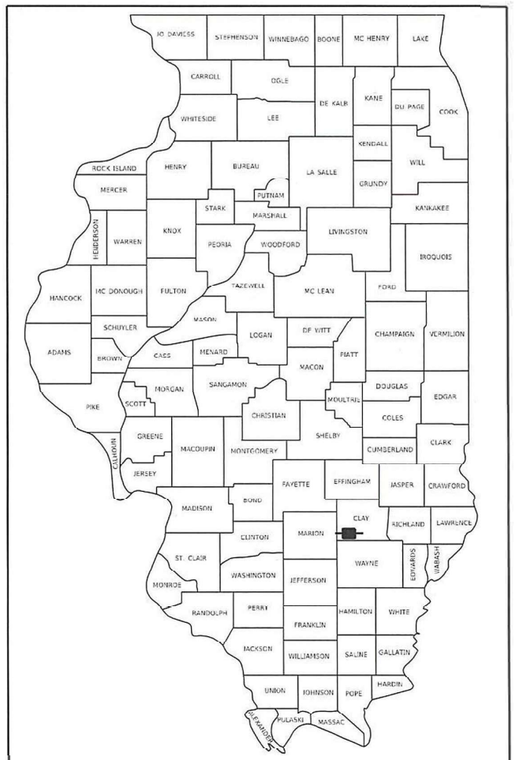

LOCATION OF SECTION INDICATED THUS:-

C-97-021-14

FOR INDEX OF SHEETS, SEE SHEET NO. 2

PROPOSED HIGHWAY PLANS

FAS ROUTE 2704 (OLD US 50)
SECTION (11BR-1)BR
PROJECT BR-TJQ5(383)
BRIDGE SUPERSTRUCTURE CLAY COUNTY

ADT (2021) = 1400

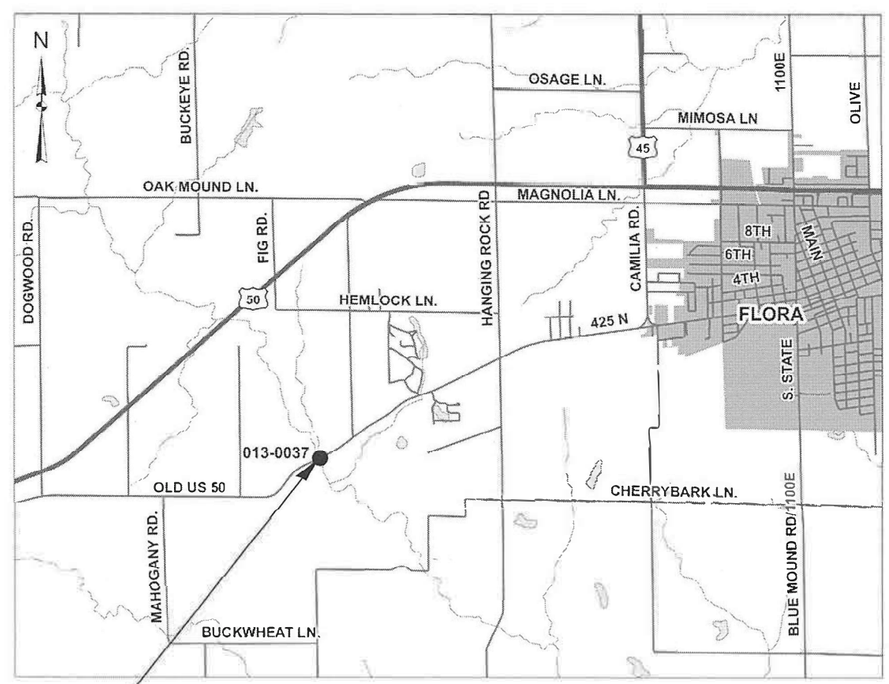

LOCATION OF PROPOSED IMPROVEMENT

GROSS LENGTH = 113.0 FT. = 0.021 MILE

0 100' 200' 300' — 1" = 100'
0 10' 20' 30' — 1" = 10'
0 50' 100' — 1" = 50'
0 50' 100' — 1" = 40'
0 50' 100' — 1" = 30'
0 50' 100' — 1" = 20'

FULL SIZE PLANS HAVE BEEN PREPARED USING STANDARD ENGINEERING SCALES. REDUCED SIZED PLANS WILL NOT CONFORM TO STANDARD SCALES. IN MAKING MEASUREMENTS ON REDUCED PLANS, THE ABOVE SCALES MAY BE USED.

J.U.L.I.E.
JOINT UTILITY LOCATION INFORMATION FOR EXCAVATORS
1-800-892-0123
OR 811

PROJECT ENGINEER BRIAN LEWIS
PROJECT MANAGER JESSICA HILLE

CONTRACT NO. 74654

STATE OF ILLINOIS
DEPARTMENT OF TRANSPORTATION

SUBMITTED January 28, 20 25
Lora Rensing
REGIONAL ENGINEER

May 9, 20 25
ENGINEER OF DESIGN AND ENVIRONMENT

May 9, 20 25
DIRECTOR OF HIGHWAYS PROJECT IMPLEMENTATION

PRINTED BY THE AUTHORITY OF THE STATE OF ILLINOIS

REV - MS

GENERAL NOTES

THIS PROJECT IS LOCATED ON FAS ROUTE 2704 IN CLAY COUNTY, APPROXIMATELY 2.5 MILES WEST OF US 45(N) JUNCTION. THE WORK INCLUDED IN SECTION (11BR-1)BR CONSISTS OF REPLACING THE EXISTING DECK BEAMS, GUARDRAIL, PLACING GABION BASKETS AND SLOPE MATTRESS, CONSTUCTING EMBANKMENT AND ALL OTHER WORK NECESSARY TO COMPLETE THIS SECTION.

SHORT TERM PAVEMENT MARKING SHALL BE TAPE.

CHANNEL EXCAVATION SHALL INCLUDE REMOVAL OF EXISTING RIPRAP AND EXCAVATION FOR PROPOSED RIPRAP TO THE ELEVATIONS SHOWN ON THE PLANS.

A NEW PERMANENT SURVEY MARKER SHALL BE INCORPORATED INTO ONE OF THE PROPOSED WINGWALLS.

TREES THREE (3) INCHES OR GREATER IN DIAMETER AT BREAST HEIGHT SHALL NOT BE CLEARED FROM APRIL 1ST THROUGH SEPTEMBER 30TH OF ANY GIVEN YEAR.

NO ENCROACHMENT INTO THE WETLANDS WILL BE ALLOWED.

THE FOLLOWING RATES WERE USED FOR CALCULATING PLAN QUANTITIES:

HOT-MIX ASPHALT	112 LB/SQ YD/INCH
BITUMINOUS MATERIALS (TACK COAT)	0.05 LB/SQ FT

THE FOLLOWING MIXTURE REQUIREMENTS ARE APPLICABLE TO THIS PROJECT:

LOCATION(S)	MIXTURE USE(S)	PG	DESIGN AIR VOIDS	MIXTURE COMPOSITION	FRICTION AGGREGATE	MIXTURE WEIGHT	QUALITY MANAGEMENT PROGRAM	SUBLOT SIZE	MATERIAL TRANSFER DEVICE (REQUIRED?)
MAINLINE	HOT-MIX ASPHALT SURFACE COURSE, IL-9.5, MIX "C", N70	PG 64-22	4.0% @ N=70	IL - 9.5	N/A	N70	QC/QA	N/A	N/A
PAVEMENT CONNECTOR	HOT-MIX ASPHALT BINDER COURSE, IL-19.0, N70	PG 64-22	4.0% @ N=70	IL -19.0	N/A	N70	QC/QA	N/A	N/A

INDEX OF SHEETS

HIGHWAY STANDARDS

THE FOLLOWING STANDARDS ARE A PART OF THESE PLANS AND ARE INCLUDED FOLOWING THE LAST NUMBERED SHEET OF THE PLANS.

000001 - 08	STANDARD SYMBOLS, ABBREVIATIONS, AND PATTERNS
001001 - 02	AREAS OF REINFORCEMENT BARS
001006	DECIMAL OF AN INCH AND OF A FOOT
280001 - 07	TEMPORARY EROSION CONTROL SYSTEMS
420406	PAVEMENT CONNECTOR (HMA) FOR BRIDGE APPROACH SLAB
515001 - 04	NAME PLATE FOR BRIDGES
630001 - 13	STEEL PLATE BEAM GUARDRAIL
631061 - 01	TRAFFIC BARRIER TERMINAL, TYPE 13
701001 - 02	OFF-ROAD OPERATIONS, 2L, 2W, MORE THAN 15' (4.5 M) AWAY
701006 - 05	OFF-ROAD OPERATIONS, 2L, 2W, 15' (4.5 M) TO 24" (600 MM) FROM PAVEMENT EDGE
701301 - 04	LANE CLOSURE, 2L, 2W, SHORT TIME OPERATIONS
701311 - 03	LANE CLOSURE, 2L, 2W, MOVING OPERATIONS - DAY ONLY
701901 - 10	TRAFFIC CONTROL DEVICES
725001 - 01	OBJECT AND TERMINAL MARKERS
780001 - 05	TYPICAL PAVEMENT MARKINGS
782006 - 01	GUARDRAIL AND BARRIER WALL REFLECTOR MOUNTING DETAILS
BLR-21 - 9	TYPICAL APPLICATION OF TRAFFIC CONTROL DEVICES FOR CONSTRUCTION ON RURAL LOCAL HIGHWAYS

REV - MS

80% FED
20% STATE

SUMMARY OF QUANTITIES

CODE NO	ITEM	UNIT	TOTAL QUANTITIES	CONSTRUCTION TYPE CODE 0013		
20200100	EARTH EXCAVATION	CU YD	18	18		
20300100	CHANNEL EXCAVATION	CU YD	427	427		
20400800	FURNISHED EXCAVATION	CU YD	285	285		
21101505	TOPSOIL EXCAVATION AND PLACEMENT	CU YD	116	116		
25100630	EROSION CONTROL BLANKET	SQ YD	1210	1210		
28000250	TEMPORARY EROSION CONTROL SEEDING	POUND	25	25		
28000400	PERIMETER EROSION BARRIER	FOOT	860	860		
28200200	FILTER FABRIC	SQ YD	816	816		
28400100	GABIONS	CU YD	77	77		
28401000	SLOPE MATTRESS 12"	SQ YD	612	612		
40600290	BITUMINOUS MATERIALS (TACK COAT)	POUND	141	141		
40600982	HOT-MIX ASPHALT SURFACE REMOVAL - BUTT JOINT	SQ YD	314	314		
40604052	HOT-MIX ASPHALT SURFACE COURSE, IL-9.5, MIX "C", N70	TON	94	94		

80% FED
20% STATE

SUMMARY OF QUANTITIES

CODE NO	ITEM	UNIT	TOTAL QUANTITIES	CONSTRUCTION TYPE CODE 0013		
42000070	PAVEMENT CONNECTOR (HMA) FOR BRIDGE APPROACH SLAB	SQ YD	72	72		
48101500	AGGREGATE SHOULDERS, TYPE B 6"	SQ YD	392	392		
50101500	REMOVAL OF EXISTING SUPERSTRUCTURES	EACH	1	1		
50102400	CONCRETE REMOVAL	CU YD	0.3	0.3		
50300225	CONCRETE STRUCTURES	CU YD	20.1	20.1		
50301350	CONCRETE SUPERSTRUCTURE (APPROACH SLAB)	CU YD	91.2	91.2		
50400405	PRECAST PRESTRESSED CONCRETE DECK BEAMS (21" DEPTH)	SQ FT	3568	3568		
50800205	REINFORCEMENT BARS, EPOXY COATED	POUND	36390	36390		
* 50900211	STEEL RAILING, TYPE IL-OH	FOOT	275	275		
51500100	NAME PLATES	EACH	1	1		
58100200	WATERPROOFING MEMBRANE SYSTEM	SQ YD	610	610		
58300100	PORTLAND CEMENT MORTAR FAIRING COURSE	FOOT	781	781		

* SPECIALTY ITEM

REV - MS

MODEL: Default
FILE NAME: pw:\\idot-pw.bentley.com:PWIDOT\Documents\IDOT Offices\District 7\Projects\74654\CADData\CADsheets\D774654-sht-SQQ.dgn

USER NAME = jessica.hille	DESIGNED -	REVISED -	
	DRAWN -	REVISED -	
PLOT SCALE = 100.0000 ' / in.	CHECKED -	REVISED -	
PLOT DATE = 1/29/2025	DATE -	REVISED -	

STATE OF ILLINOIS
DEPARTMENT OF TRANSPORTATION

SUMMARY OF QUANTITIES

SCALE: | SHEET 1 OF 2 SHEETS | STA. TO STA.

F.A.S. RTE.	SECTION	COUNTY	TOTAL SHEETS	SHEET NO.
2704	(11BR-1)BR	CLAY	38	3

CONTRACT NO. 74654

ILLINOIS | FED. AID PROJECT

80% FED
20% STATE

SUMMARY OF QUANTITIES

CODE NO	ITEM	UNIT	TOTAL QUANTITIES	CONSTRUCTION TYPE CODE 0013		
* 63000001	STEEL PLATE BEAM GUARDRAIL, TYPE A, 6 FOOT	FOOT	175	175		
	POSTS					
* 63100117	TRAFFIC BARRIER TERMINAL, TYPE 13	EACH	4	4		
* 63100167	TRAFFIC BARRIER TERMINAL, TYPE 1 (SPECIAL)	EACH	4	4		
	TANGENT					
* 63200310	GUARDRAIL REMOVAL	FOOT	340	340		
66600105	FURNISHING AND ERECTING RIGHT OF WAY MARKERS	EACH	8	8		
66700205	PERMANENT SURVEY MARKERS, TYPE I	EACH	1	1		
67000400	ENGINEER'S FIELD OFFICE, TYPE A	CAL MO	5	5		
67100100	MOBILIZATION	L SUM	1	1		
70107025	CHANGEABLE MESSAGE SIGN	CAL DA	28	28		
70300100	SHORT TERM PAVEMENT MARKING	FOOT	60	60		
70300150	SHORT TERM PAVEMENT MARKING REMOVAL	SQ FT	20	20		
* 72501000	TERMINAL MARKER - DIRECT APPLIED	EACH	4	4		
* 78001110	PAINT PAVEMENT MARKING - LINE 4"	FOOT	1200	1200		

* SPECIALTY ITEM

80% FED
20% STATE

SUMMARY OF QUANTITIES

CODE NO	ITEM	UNIT	TOTAL QUANTITIES	CONSTRUCTION TYPE CODE 0013		
* 78200005	GUARDRAIL REFLECTORS, TYPE A	EACH	10	10		
78300200	RAISED REFLECTIVE PAVEMENT MARKER REMOVAL	EACH	2	2		
X2501000	SEEDING, CLASS 2 (SPECIAL)	ACRE	0.25	0.25		
X7011800	TRAFFIC CONTROL AND PROTECTION, STANDARD BLR	L SUM	1	1		
	21					
Z0001495	BRIDGE APPROACH SHOULDER REMOVAL	SQ YD	39	39		
Z0004552	APPROACH SLAB REMOVAL	SQ YD	107	107		

* SPECIALTY ITEM

REV - MS

MODEL: Default
FILE NAME: pw:\\idot-pw.bentley.com:PWIDOT\Documents\IDOT Offices\District 7\Projects\74654\CADData\CADsheets\0774654-sht-SOQ.dgn

USER NAME = jessica.hille	DESIGNED -	REVISED -	
	DRAWN -	REVISED -	
PLOT SCALE = 100.0000 ' / in.	CHECKED -	REVISED -	
PLOT DATE = 1/30/2025	DATE -	REVISED -	

STATE OF ILLINOIS
DEPARTMENT OF TRANSPORTATION

SUMMARY OF QUANTITIES

SCALE: | SHEET 2 OF 2 SHEETS | STA. | TO STA.

F.A.S. RTE.	SECTION	COUNTY	TOTAL SHEETS	SHEET NO.
2704	(11BR-1)BR	CLAY	38	4

CONTRACT NO. 74654

ILLINOIS | FED. AID PROJECT

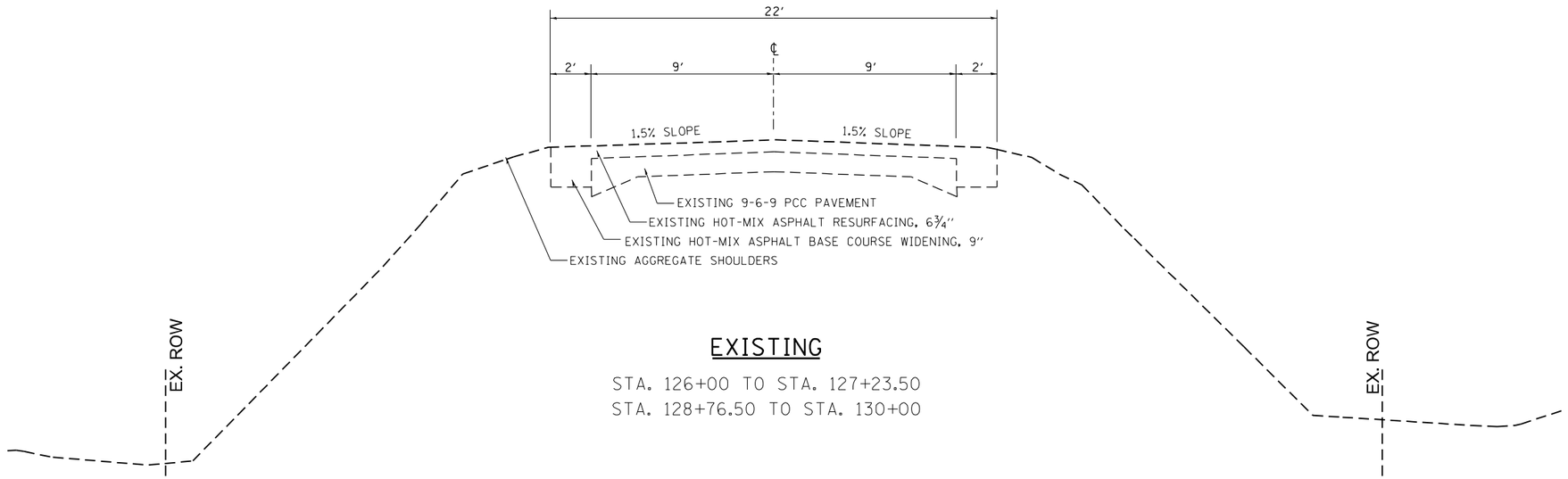

EXISTING

STA. 126+00 TO STA. 127+23.50
STA. 128+76.50 TO STA. 130+00

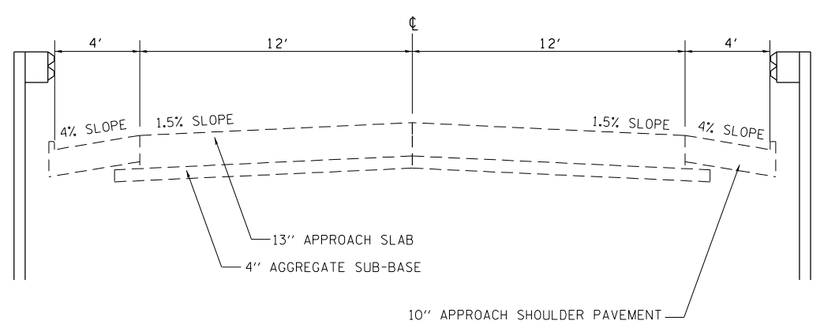

EXISTING

STA. 127+23.5 TO STA. 127+43.5
STA. 128+56.5 TO STA. 128+76.5

MODEL: Default
FILE NAME: pw:\\ildot-pw.bentley.com:PWIDOT\Documents\IDOT Offices\District 7\Projects\74654\CADData\CADsheets\074654-sht-typicals.dgn

USER NAME = jessica.hille	DESIGNED -	REVISED -	
	DRAWN -	REVISED -	
PLOT SCALE = 100.0000 ' / in.	CHECKED -	REVISED -	
PLOT DATE = 1/29/2025	DATE -	REVISED -	

STATE OF ILLINOIS
DEPARTMENT OF TRANSPORTATION

EXISTING TYPICAL SECTIONS

SCALE: | SHEET OF SHEETS | STA. TO STA.

F.A.S. RTE.	SECTION	COUNTY	TOTAL SHEETS	SHEET NO.
2704	(11BR-1)BR	CLAY	38	5

CONTRACT NO. 74654

ILLINOIS | FED. AID PROJECT

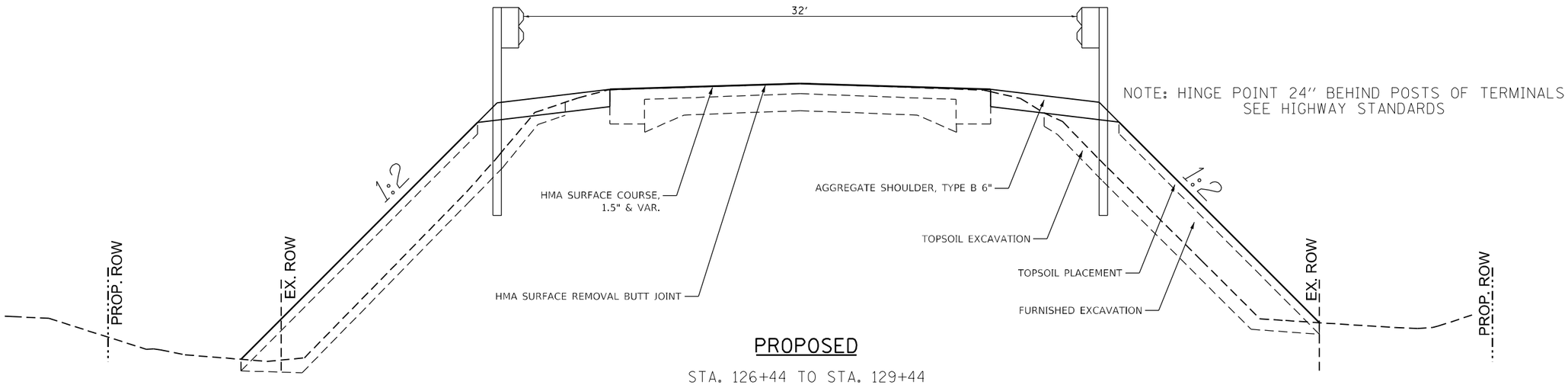

PROPOSED

STA. 126+44 TO STA. 129+44
(BRIDGE APPROACH AND DECK OVERLAY
STA. 127+14 TO STA. 128+86)

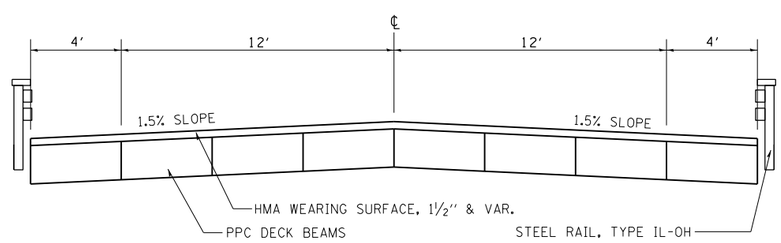

PROPOSED

STA. 127+44.17 TO STA. 128+55.83

MODEL: Default
FILE NAME: pw:\\ildot-pw.bentley.com:PWIDOT\Documents\IDOT Offices\District 7\Projects\74654\CADData\CADsheets\074654-sht-typicals.dgn

USER NAME = jessica.hille	DESIGNED -	REVISED -	
	DRAWN -	REVISED -	
PLOT SCALE = 100.0000 ' / in.	CHECKED -	REVISED -	
PLOT DATE = 1/29/2025	DATE -	REVISED -	

STATE OF ILLINOIS
DEPARTMENT OF TRANSPORTATION

PROPOSED TYPICAL SECTIONS

SCALE: | SHEET 2 OF 2 SHEETS | STA. TO STA.

F.A.S. RTE.	SECTION	COUNTY	TOTAL SHEETS	SHEET NO.
2704	(11BR-1)BR	CLAY	38	6

CONTRACT NO. 74654

ILLINOIS | FED. AID PROJECT

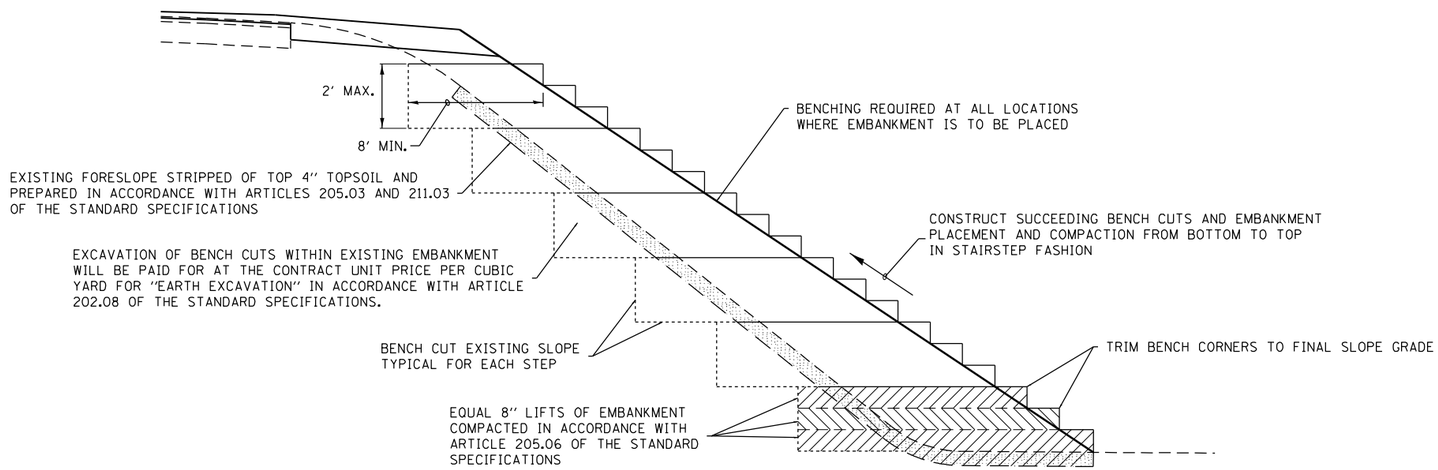

TYPICAL BENCHING FOR EMBANKMENTS DETAIL

(NOT TO SCALE)

AGGREGATE SHOULDERS, TYPE B 6"

STATION	TO	STATION	SIDE	WIDTH FEET	AREA SQ YD
125+58.00	TO	125+92.00	RT	VAR.	11.3
125+92.00	TO	126+43.00	RT	6.0	34.0
126+43.00	TO	126+45.00	RT	VAR.	1.1
126+45.00	TO	126+91.00	RT	4.0	20.4
126+91.00	TO	126+93.00	RT	VAR.	1.1
126+93.00	TO	127+44.00	RT	6.0	34.0
125+71.00	TO	126+05.00	LT	VAR.	11.3
126+05.00	TO	126+55.00	LT	6.0	33.3
126+55.00	TO	126+57.00	LT	VAR.	1.1
126+57.00	TO	126+91.00	LT	4.0	15.1
126+91.00	TO	126+93.00	LT	VAR.	1.1
126+93.00	TO	127+44.00	LT	6.0	34.0
128+56.00	TO	129+07.00	RT	6.0	34.0
129+07.00	TO	129+09.00	RT	VAR.	1.1
129+09.00	TO	129+43.00	RT	4.0	15.1
129+43.00	TO	129+45.00	RT	VAR.	1.1
129+45.00	TO	129+95.00	RT	6.0	33.3
129+95.00	TO	130+10.00	RT	VAR.	7.8
128+56.00	TO	129+07.00	LT	6.0	34.0
129+07.00	TO	129+09.00	LT	VAR.	1.1
129+09.00	TO	129+55.00	LT	4.0	20.4
129+55.00	TO	129+57.00	LT	VAR.	1.1
129+57.00	TO	130+08.00	LT	6.0	34.0
130+08.00	TO	130+42.00	LT	VAR.	11.3
				TOTALS=	392

FURNISHING AND ERECTING ROW MARKERS

125+75.00	LT	1	EACH
126+25.00	LT	1	EACH
130+00.00	LT	1	EACH
130+46.41	LT	1	EACH
125+50.00	RT	1	EACH
126+00.00	RT	1	EACH
129+50.00	RT	1	EACH
130+00.00	RT	1	EACH
TOTAL		8	EACH

HOT MIX ASPHALT SURFACE REMOVAL - BUTT JOINT

STATION	TO	STATION	LENGTH	WIDTH	SQ FT	SQ YD
126+44.00		127+14.17	70.17	22	1544	171.5
128+85.83		129+44.00	58.17	22	1280	142.2
			TOTAL			313.7
			ROUNDED TOTAL			314

PAVEMENT CONNECTOR (HMA) FOR BRIDGE APPROACH SLAB

STATION	TO	STATION	LENGTH	WIDTH	SQ FT	SQ YD
127+04.17		127+14.17	10	32	320	35.6
128+85.83		128+95.83	10	32	320	35.6
			TOTAL			71.1
			ROUNDED TOTAL			72

EARTHWORK SCHEDULE

LOCATION	EARTH EXCAVATION	EXCAVATION TO BE USED IN EMBANKMENT ADJUSTED FOR SHRINKAGE	EMBANKMENT	EARTHWORK BALANCE WASTE(+) SHORTAGE(-)
	CU.YD.	CU.YD.	CU.YD.	CU.YD.
EXCAVATION	18	14		14
FILL			298	-298
CHANNEL EXCAVATION	427	0		
TOTALS	445	14	298	-285

HMA SURFACE COURSE, IL 9.5, MIX "C", N70

STATION	TO	STATION	LENGTH	WIDTH	TON
126+44.00		127+14.17	70.17	22	18.0
128+85.83		129+44.00	58.17	22	12.0
STRUCTURE PLANS					63.9
			TOTAL		93.9
			ROUNDED TOTAL		94

MODEL: Default
FILE NAME: pw:\\ildot-pw.bentley.com:PWIDOT\Documents\IDOT Offices\District 7\Projects\74654\CADData\CADsheets\077465-sht-sched.dgn

USER NAME = jessica.hille	DESIGNED -	REVISED -	
	DRAWN -	REVISED -	
PLOT SCALE = 100.0000 ' / in.	CHECKED -	REVISED -	
PLOT DATE = 1/29/2025	DATE -	REVISED -	

STATE OF ILLINOIS
DEPARTMENT OF TRANSPORTATION

SCHEDULE OF QUANTITIES

SCALE: SHEET OF SHEETS STA. TO STA.

F.A.S. RTE.	SECTION	COUNTY	TOTAL SHEETS	SHEET NO.
2704	(11BR-1)BR	CLAY	38	7

CONTRACT NO. 74654

ILLINOIS FED. AID PROJECT

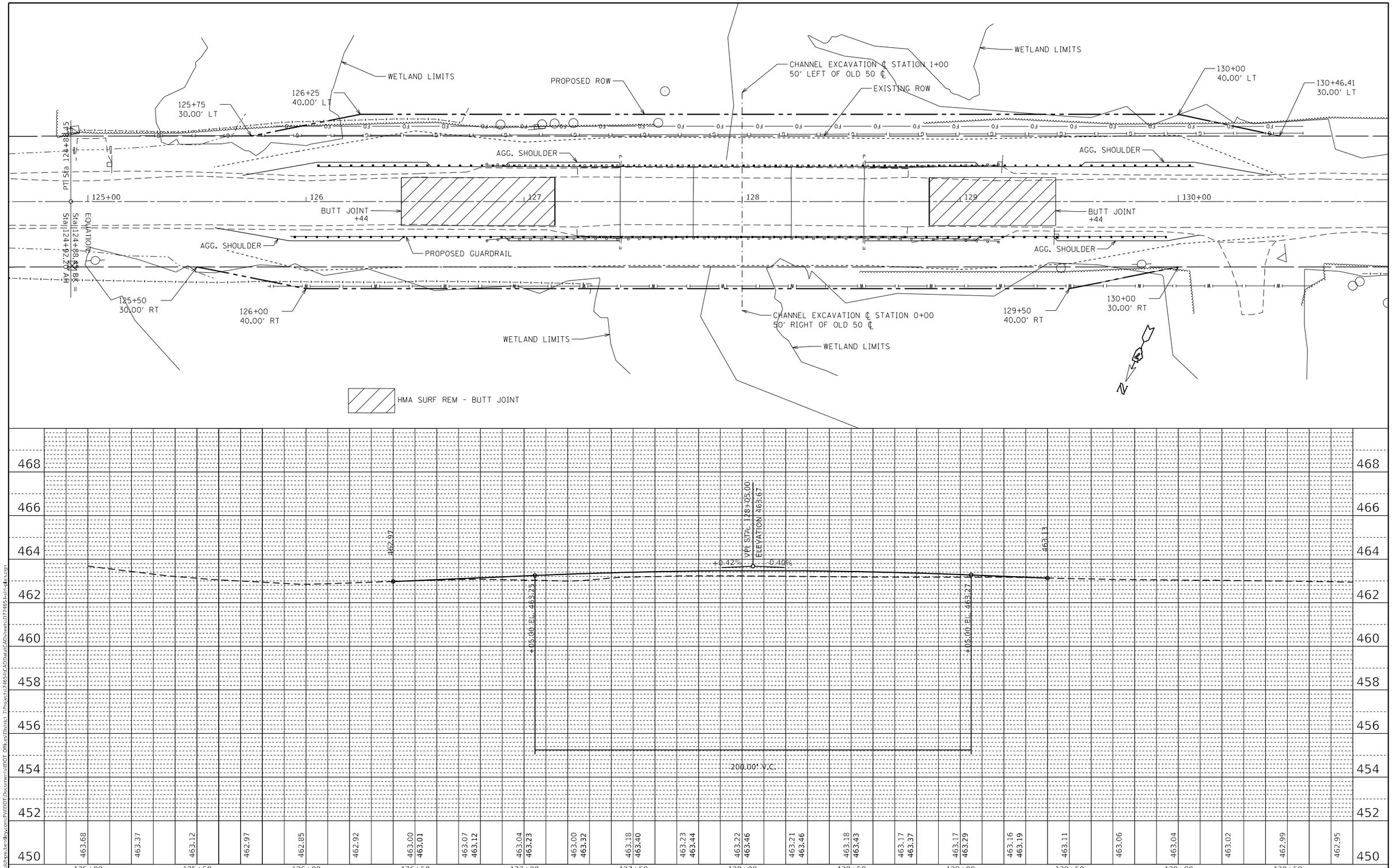

PLAN

NOTE BOOK NO.	SURVEYED	PLOTTED	ALIGNMENT CHECKED	R/W CHECKED	CADD FILE NAME	BY	DATE

PROFILE

NOTE BOOK NO.	SURVEYED	PLOTTED	GRADES CHECKED	B.M. NOTED	STRUCTURE NOTATIONS CHKD	BY	DATE

MODEL: Default
FILE NAME: pw:\\ildot-pw.bentley.com:PWIDOT\Documents\IDOT Offices\District 7\Projects\74654\CADData\CADsheets\0774654-plan-plan.dgn

USER NAME = jessica.hille	DESIGNED -	REVISED -	
	DRAWN -	REVISED -	
PLOT SCALE = 40.0000 ' / in.	CHECKED -	REVISED -	
PLOT DATE = 1/29/2025	DATE -	REVISED -	

STATE OF ILLINOIS
DEPARTMENT OF TRANSPORTATION

PLAN AND PROFILE
RACCOON CREEK

SCALE: SHEET OF SHEETS STA. TO STA.

F.A.S. RTE.	SECTION	COUNTY	TOTAL SHEETS	SHEET NO.
2704	(11BR-1)BR	CLAY	38	8

CONTRACT NO. 74654

ILLINOIS FED. AID PROJECT

Benchmark (BM 602): IDOT survey disk located on the Northeast headwall of S.N. 013-0037. Station 127+40, 17.2' Rt. of centerline. Elevation 462.85.

Existing Structure: S.N. 013-0037 was built in 1992 as S.B.I. Rte. 12 (Old U.S. 50), Section 11BR-1 at Sta. 128+00. The existing structure consists of PPC deck beams with HMA overlay supported on open abutments and solid wall encased pile bent piers with H-piles. Back-to-back of abutment length is 113'-0" and out-to-out width of deck is 32'-0". The structure has no skew.
Existing superstructure to be removed and replaced. Construction will be performed under road closure.

No salvage.

* Hatched area indicates Channel Excavation, Removal of Existing Riprap, and Removal of Unsuitable Materials. For quantities see Roadway Plans.

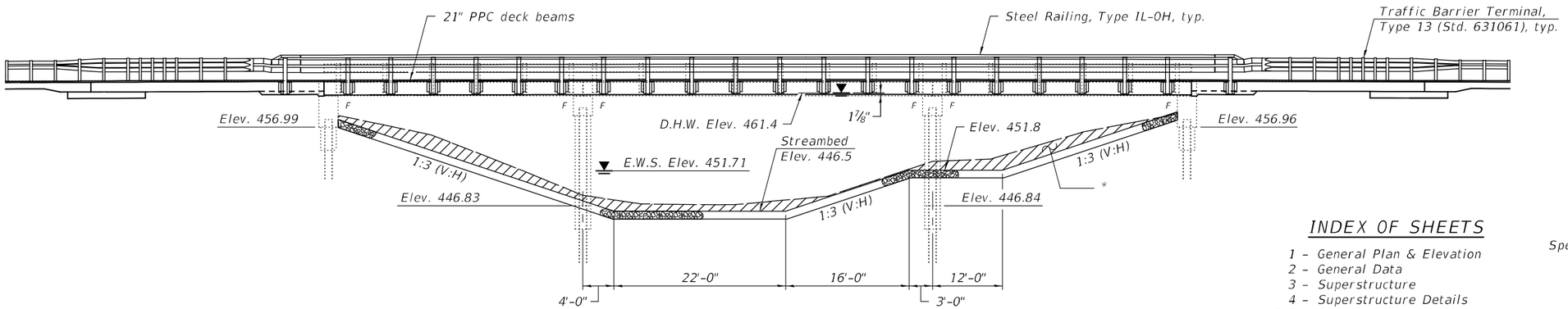

ELEVATION

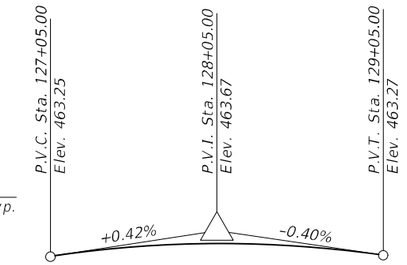

200' Vert. curve

PROFILE GRADE
(Along ℄ Old U.S. Rte. 50)

INDEX OF SHEETS

DESIGN SPECIFICATIONS

2020 AASHTO LRFD Bridge Design Specifications, Customary U.S. Units, 9th Edition

DESIGN STRESSES

EXISTING CONSTRUCTION
f'c = 3,500 psi
fy = 60,000 psi (reinforcement)

NEW CONSTRUCTION
f'c = 3,500 psi
f'c = 4,000 psi (approach slab concrete)
fy = 60,000 psi (reinforcement)

PRECAST PRESTRESSED UNITS
f'c = 6,000 psi
f'ci = 5,000 psi
fpu = 270,000 psi (½" Ø low lax strands)
fpbt = 201,960 psi (½" Ø low lax strands)

LOADING HL-93

Allow 50#/sq. ft. for future wearing surface.

SEISMIC DATA

Seismic Performance Category (SPC) = A
Bedrock Acceleration Coefficient (A) = 0.089
Site Coefficient (S) = 2.0

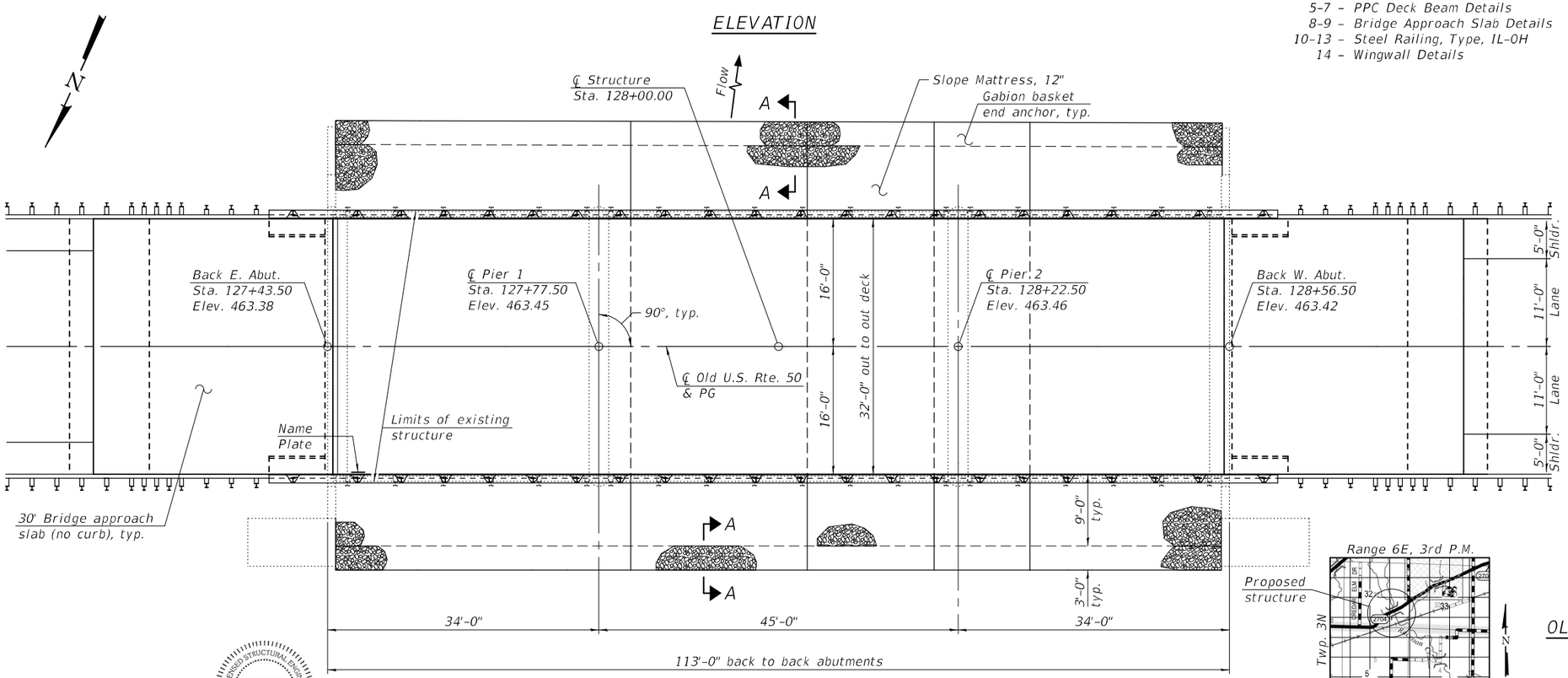

PLAN

EXPIRES 11-30-2026

Range 6E, 3rd P.M.

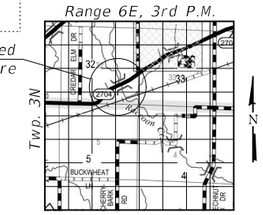

LOCATION SKETCH

GENERAL PLAN & ELEVATION
OLD U.S. ROUTE 50 OVER RACOON CREEK
F.A.S. RTE. 2704 - SEC. (11BR-1)BR
CLAY COUNTY
STATION 128+00.00
STRUCTURE NO. 013-0037

DESIGNED -	MICHAEL A. PAULIONIS	EXAMINED	ENGINEER OF BRIDGE DESIGN
CHECKED -	RYAN P. NEGANGARD	PASSED	ENGINEER OF BRIDGES AND STRUCTURES
DRAWN -	ANDRO R. SAMANIEGO	DATE -	5-13-2025
CHECKED -	M.A.P. / R.P.N. / G.R.A.	REVISED -	
		REVISED -	

STATE OF ILLINOIS
DEPARTMENT OF TRANSPORTATION

SHEET 1 OF 14 SHEETS

F.A.S. RTE.	SECTION	COUNTY	TOTAL SHEETS	SHEET NO.
2704	(11BR-1)BR	CLAY	38	9

CONTRACT NO. 74654

ILLINOIS | FED. AID PROJECT

MODEL: 0130037-74654-001
FILE NAME: pw:\\ildot-pw.bentley.com:PWIDOT\Documents\IDOT Offices\Bureau of Bridges and Structures\Projects\0130037\CADD Plans\0130037-74654.dgn
5/13/2025 12:00:45 PM

STATION 128+00.00
RE-BUILT 20 BY
STATE OF ILLINOIS
F.A.S. RTE. 2704 SEC. (11BR-1)BR
LOADING HL-93
STRUCTURE NO. 013-0037

NAME PLATE

See Std. 515001

Existing name plate shall be cleaned and relocated next to new name plate. Cost included with Name Plates.

DESIGN SCOUR ELEVATION TABLE

Event / Limit State	Design Scour Elevations (ft.)				
	E. Abut.	Pier 1	Pier 2	W. Abut.	Item 113
Q100	456.99	429.30	424.30	456.96	7
Q200	456.99	429.30	424.30	456.96	
Design	456.99	443.83	443.84	456.96	

WATERWAY INFORMATION

Drainage Area = 21.8 sq. mi.
Existing Overtopping Elev. = 462.84 at Sta. 125+95
Proposed Overtopping Elev. = 462.84 at Sta. 125+95

Flood	Freq. Yr.	Q C.F.S.	Opening Ft² Exist.	Opening Ft² Prop.	Nat. H.W.E.	Head - Ft. Exist.	Head - Ft. Prop.	Headwater El. Exist.	Headwater El. Prop.
	10	2920	821	821	459.6	0.9	0.9	460.5	460.5
Design	50	4630	963	963	461.4	0.6	0.6	462.0	462.0
Base	100	5380	963	963	462.2	0.8	0.8	463.0	463.0
Scour Design Check	100	5380	963	963	462.2	0.8	0.8	463.0	463.0
Overtop Exist./Prop.	100	5380	963	963	462.2	0.8	0.8	463.0	463.0
Max. Calc.	200	6170	963	963	462.9	0.7	0.7	463.6	463.6

10 Year velocity through existing structure = 3.6 ft./sec.
10 Year velocity through proposed structure = 3.6 ft./sec.

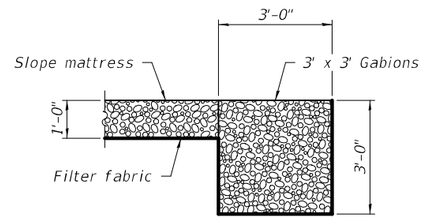

SECTION A-A

GENERAL NOTES

Reinforcement bars designated (E) shall be epoxy coated.

Plan dimensions and details relative to existing plans are subject to nominal construction variations. The Contractor shall field verify existing dimensions and details affecting new construction and make necessary approved adjustments prior to construction or ordering of materials. Such variations shall not be cause for additional compensation for a change in scope of the work, however, the Contractor will be paid for the quantity actually furnished at the unit price bid for the work.

The Contractor is advised that the existing PPC deck beams are in a deteriorated condition with reduced load carrying capacity. It is the Contractor's responsibility to account for the condition of the beams when developing construction procedures for the removal and replacement of the superstructure.

Layout of the slope protection system may be varied to suit ground conditions in the field as directed by the Engineer.

TOTAL BILL OF MATERIAL

ITEM	UNIT	SUPER	SUB	TOTAL
Filter Fabric	Sq. Yd.		816	816
Gabions	Cu. Yd.		77	77
Slope Mattress 12"	Sq. Yd.		612	612
Hot-Mix Asphalt Surface Course, IL-9.5, Mix "C", N70	Ton	63.9		63.9
Removal of Existing Superstructures	Each	1		1
Concrete Removal	Cu. Yd.		0.3	0.3
Concrete Structures	Cu. Yd.		20.1	20.1
Concrete Superstructure (Approach Slab)	Cu. Yd.	91.2		91.2
Precast Prestressed Concrete Deck Beams (21" Depth)	Sq. Ft.	3,568		3,568
Reinforcement Bars, Epoxy Coated	Pound	36,360	30	36,390
Steel Railing, Type IL-0H	Foot	275		275
Name Plates	Each	1		1
Waterproofing Membrane System	Sq. Yd.	610		610
Portland Cement Mortar Fairing Course	Foot	781		781

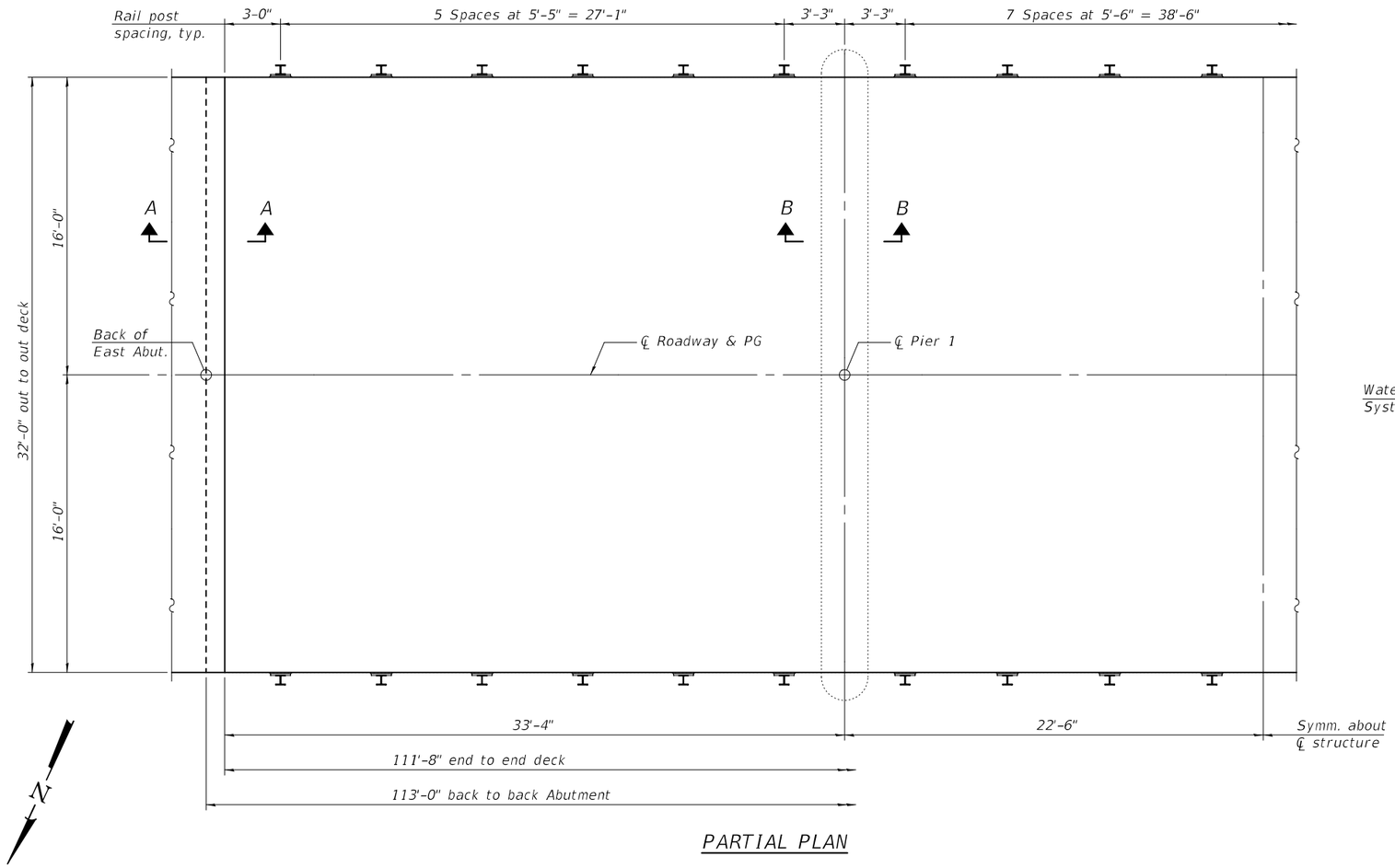

PARTIAL PLAN

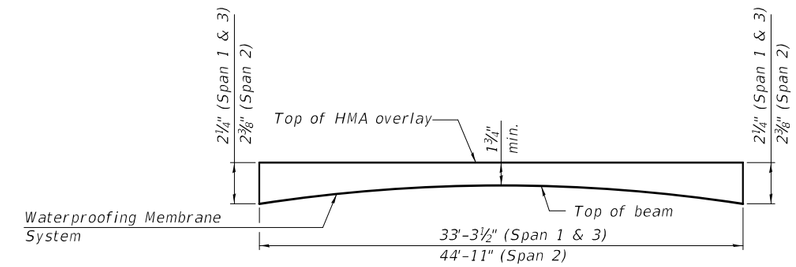

ANTICIPATED HMA WEARING SURFACE PROFILE

(For information only)

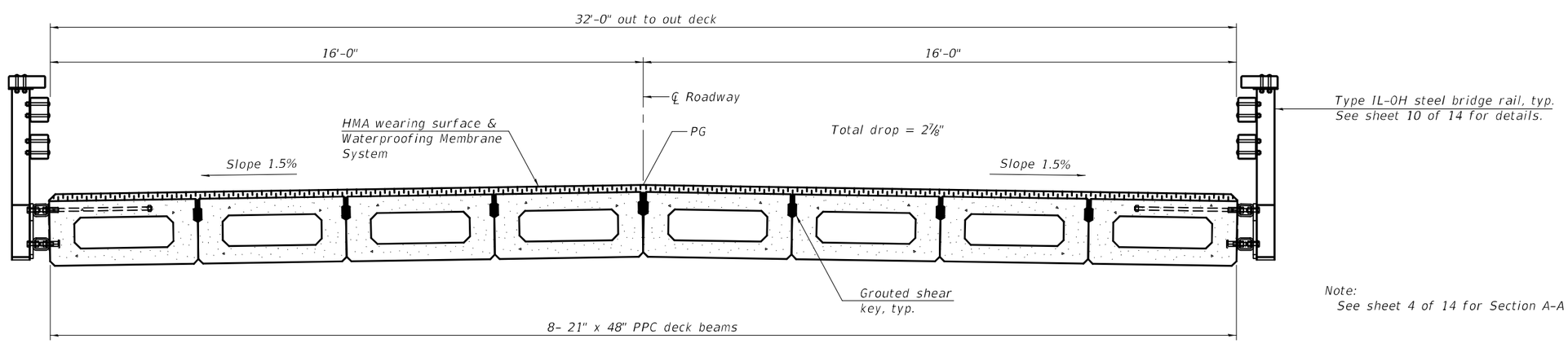

CROSS SECTION

(Looking West)

Note:
See sheet 4 of 14 for Section A-A and B-B.

MODEL: 0130037-74654-003
FILE NAME: pw:\\ildot-pw.bentley.com:PWIDOT\Documents\IDOT Offices\Bureau of Bridges and Structures\Projects\0130037\CADD Plans\0130037-74654.dgn
5/13/2025 2:49:41 PM

DESIGNED -	MICHAEL A. PAULIONIS	EXAMINED	ENGINEER OF BRIDGE DESIGN
CHECKED -	RYAN P. NEGANGARD		
DRAWN -	ANDRO R. SAMANIEGO	PASSED	ENGINEER OF BRIDGES AND STRUCTURES
CHECKED -	M.A.P. / R.P.N. / G.R.A.		

DATE - MAY 13, 2025
REVISED -
REVISED -

STATE OF ILLINOIS
DEPARTMENT OF TRANSPORTATION

SUPERSTRUCTURE
STRUCTURE NO. 013-0037

SHEET 3 OF 14 SHEETS

F.A.S. RTE.	SECTION	COUNTY	TOTAL SHEETS	SHEET NO.
2704	(11BR-1)BR	CLAY	38	11
		CONTRACT NO. 74654		
		ILLINOIS	FED. AID PROJECT	

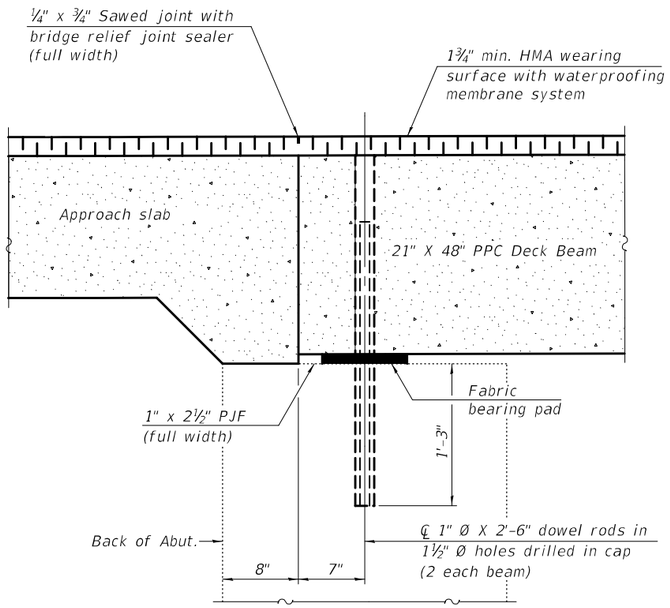

SECTION A-A

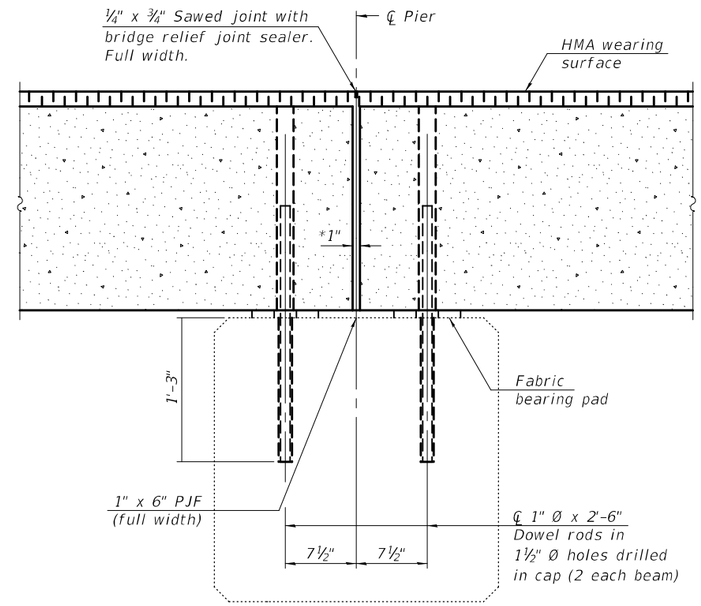

SECTION B-B

*1" Jt. shall be filled with non-shrink grout. 1" dimension may vary to accommodate tolerance in beam lengths.

Notes:
See sheet 7 of 14 for fabric bearing pad details.
Burn existing dowel rods flush with existing concrete surfaces. Grind existing dowel rod smooth and seal with epoxy. Cost included with Removal of Existing Superstructures.

MODEL: 0130037-74654-004
FILE NAME: pw:\\ildot-pw.bentley.com:PWIDOT\Documents\IDOT Offices\Bureau of Bridges and Structures\Projects\0130037\CADD Plans\0130037-74654.dgn
5/13/2025 2:49:41 PM

DESIGNED - MICHAEL A. PAULIONIS	EXAMINED	ENGINEER OF BRIDGE DESIGN	DATE - MAY 13, 2025	STATE OF ILLINOIS DEPARTMENT OF TRANSPORTATION	SUPERSTRUCTURE DETAILS STRUCTURE NO. 013-0037
CHECKED - RYAN P. NEGANGARD	PASSED	ENGINEER OF BRIDGES AND STRUCTURES	REVISED -		
DRAWN - ANDRO R. SAMANIEGO			REVISED -		
CHECKED - M.A.P. / R.P.N. / G.R.A.					SHEET 4 OF 14 SHEETS

F.A.S. RTE.	SECTION	COUNTY	TOTAL SHEETS	SHEET NO.
2704	(11BR-1)BR	CLAY	38	12
		CONTRACT NO. 74654		
	ILLINOIS	FED. AID PROJECT		

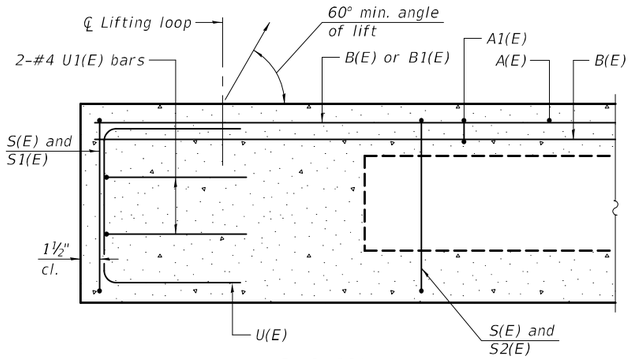

SECTION A-A

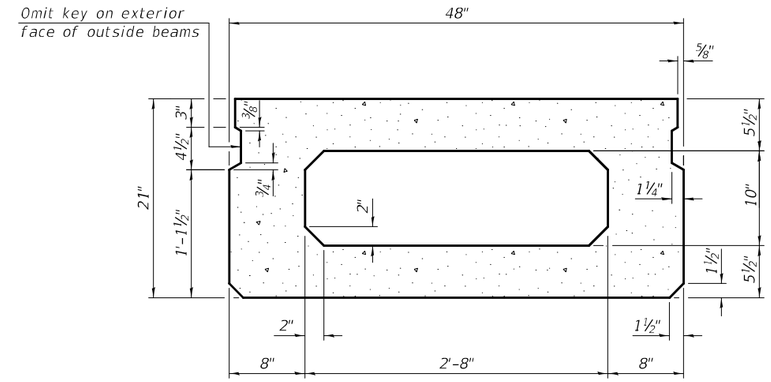

SECTION B-B
(Showing dimensions)

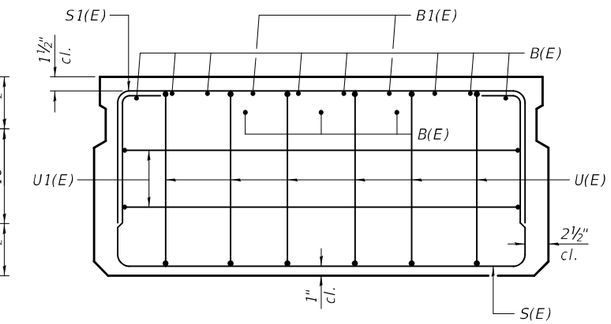

VIEW C-C

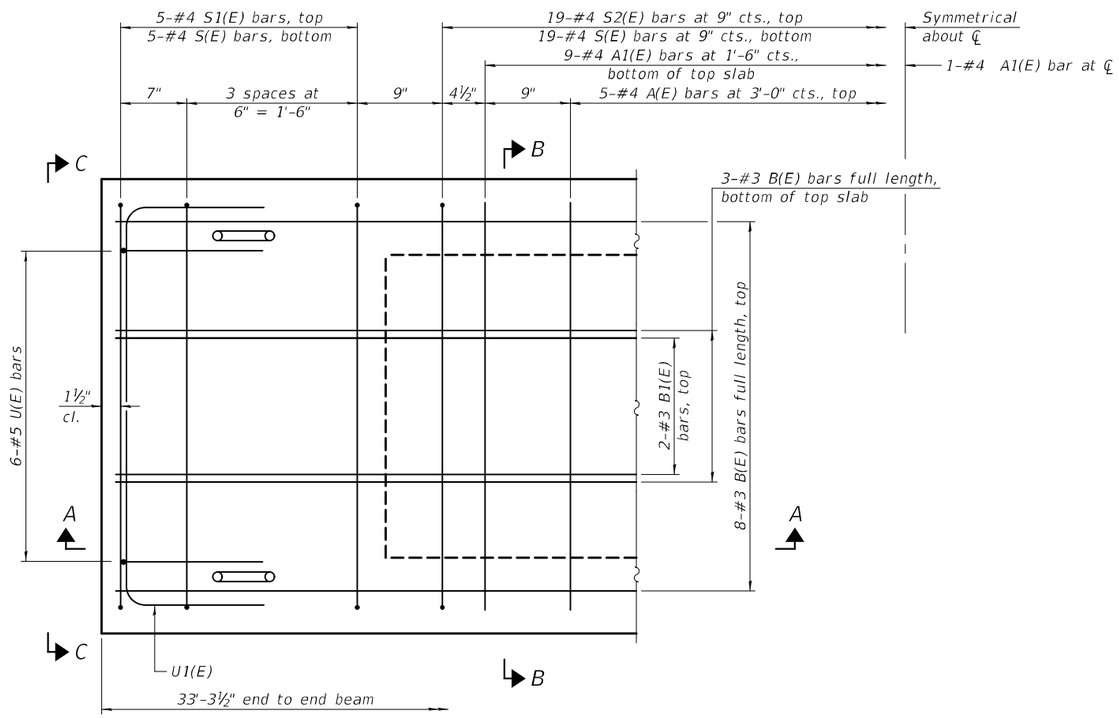

PLAN VIEW

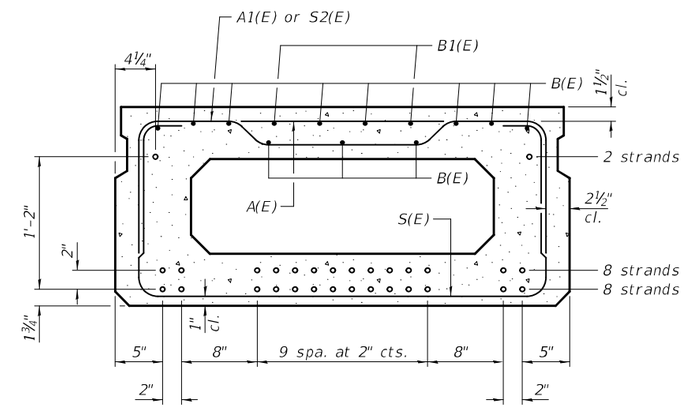

SECTION B-B
(Showing reinforcement and permissible strand locations)

Note:
Place the number of strands specified in each row symmetrically about the centerline of beam in the permissible strand locations shown.

MINIMUM BAR LAP
#3 bar = 1'-6"

BAR LIST
ONE BEAM ONLY
(For information only)

Bar	No.	Size	Length	Shape
A(E)	10	#4	3'-7"	—
A1(E)	19	#4	3'-10"	
B(E)	11	#3	33'-0"	—
B1(E)	4	#3	10'-0"	—
S(E)	38	#4	7'-5"	
S1(E)	10	#4	5'-11"	
S2(E)	38	#4	6'-2"	
U(E)	12	#5	4'-0"	
U1(E)	4	#4	6'-0"	

Note:
See sheet 7 of 14 for additional details and Bill of Material.

Note:
Spacing of S(E) and S2(E) bars may be adjusted up to 4" in the immediate area of the transverse tie diaphragms to miss the block outs for the transverse ties.

PD-2148-0 1-1-2020

DESIGNED -	MICHAEL A. PAULIONIS	EXAMINED	ENGINEER OF BRIDGE DESIGN
CHECKED -	RYAN P. NEGANGARD	PASSED	ENGINEER OF BRIDGES AND STRUCTURES
DRAWN -	ANDRO R. SAMANIEGO	DATE -	MAY 13, 2025
CHECKED -	M.A.P. / R.P.N. / G.R.A.	REVISED -	
		REVISED -	

STATE OF ILLINOIS
DEPARTMENT OF TRANSPORTATION

SPAN 1 & 3- 21" X 48" PPC DECK BEAM DETAILS
STRUCTURE NO. 013-0037

SHEET 5 OF 14 SHEETS

F.A.S. RTE.	SECTION	COUNTY	TOTAL SHEETS	SHEET NO.
2704	(11BR-1)BR	CLAY	38	13
		CONTRACT NO. 74654		
		ILLINOIS	FED. AID PROJECT	

MODEL: 0130037-74654-005
FILE NAME: pw:\\ildot-pw.bentley.com:PWIDOT\Documents\IDOT Offices\Bureau of Bridges and Structures\Projects\0130037\CADD Plans\0130037-74654.dgn
5/13/2025 2:49:41 PM

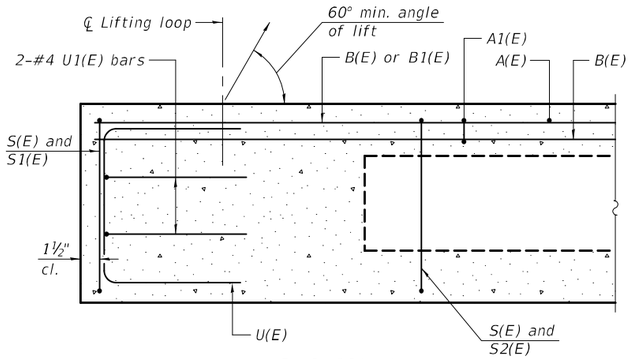

SECTION A-A

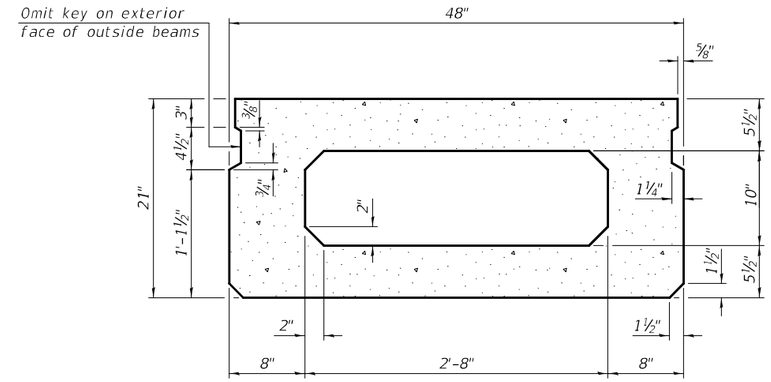

SECTION B-B
(Showing dimensions)

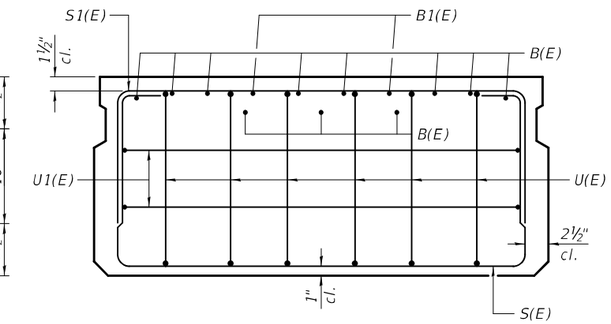

VIEW C-C

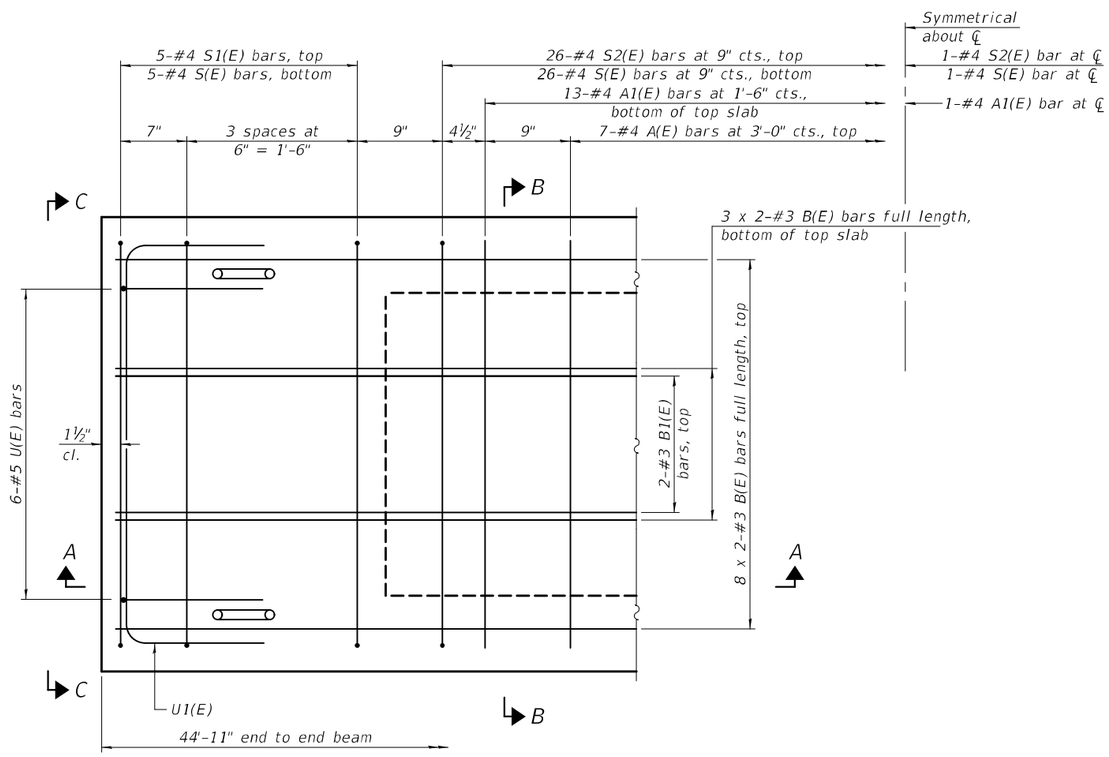

PLAN VIEW

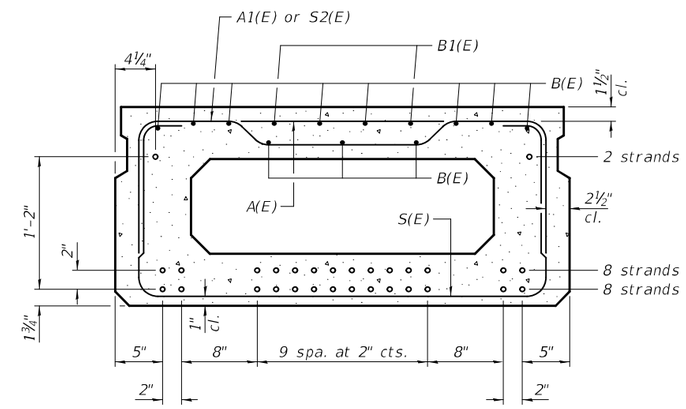

SECTION B-B
(Showing reinforcement and permissible strand locations)

Note:
Place the number of strands specified in each row symmetrically about the centerline of beam in the permissible strand locations shown.

MINIMUM BAR LAP
#3 bar = 1'-6"

BAR LIST
ONE BEAM ONLY
(For information only)

Bar	No.	Size	Length	Shape
A(E)	14	#4	3'-7"	—
A1(E)	27	#4	3'-10"	~
B(E)	22	#3	23'-1"	—
B1(E)	4	#3	10'-0"	—
S(E)	53	#4	7'-5"	⊔
S1(E)	10	#4	5'-11"	⊓
S2(E)	53	#4	6'-2"	⊓
U(E)	12	#5	4'-0"	⊏
U1(E)	4	#4	6'-0"	⊓

Note:
See sheet 7 of 14 for additional details and Bill of Material.
Bars indicated thus 8 x 2-#3 etc. indicates 8 lines of bars with 2 lengths per line.

Note:
Spacing of S(E) and S2(E) bars may be adjusted up to 4" in the immediate area of the transverse tie diaphragms to miss the block outs for the transverse ties.

PD-2148-0 1-1-2020

DESIGNED - MICHAEL A. PAULIONIS	EXAMINED	DATE - MAY 13, 2025	STATE OF ILLINOIS DEPARTMENT OF TRANSPORTATION
CHECKED - RYAN P. NEGANGARD	ENGINEER OF BRIDGE DESIGN		
DRAWN - ANDRO R. SAMANIEGO	PASSED	REVISED -	
CHECKED - M.A.P. / R.P.N. / G.R.A.	ENGINEER OF BRIDGES AND STRUCTURES	REVISED -	

SPAN 2- 21" X 48" PPC DECK BEAM DETAILS
STRUCTURE NO. 013-0037

SHEET 6 OF 14 SHEETS

F.A.S. RTE.	SECTION	COUNTY	TOTAL SHEETS	SHEET NO.
2704	(11BR-1)BR	CLAY	38	14

CONTRACT NO. 74654
ILLINOIS FED. AID PROJECT

MODEL: 0130037-74654-006
FILE NAME: pw:\\ildot-pw.bentley.com:PWIDOT-Documents\IDOT Offices\Bureau of Bridges and Structures\Projects\0130037\CADD Plans\0130037-74654.dgn
5/13/2025 2:49:42 PM

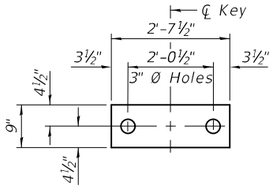

FABRIC BEARING PAD
(Interior)

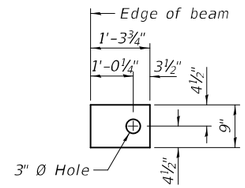

FABRIC BEARING PAD
(Exterior)

FIXED

Notes:
All bearing pads shall be 1" thick.
Omit holes when using expansion bearings.
Expansion bearing pads shall be bonded to the substructure.

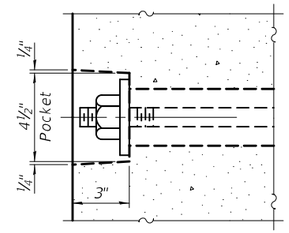

SECTION A-A

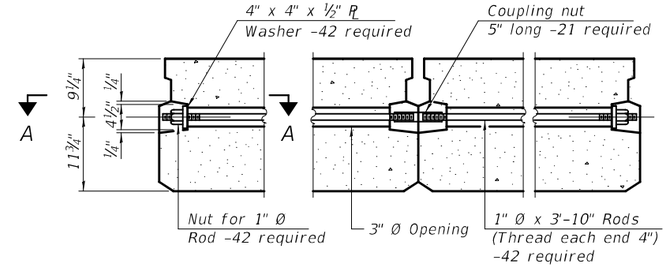

TYPICAL TRANSVERSE TIE ASSEMBLY

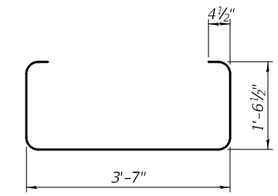

BAR S(E)

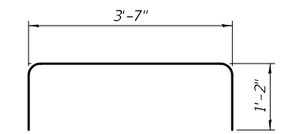

BAR S1(E)

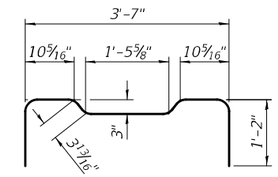

BAR S2(E)

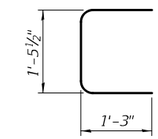

BAR U(E)

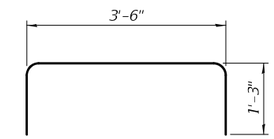

BAR U1(E)

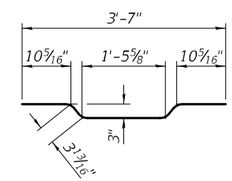

BAR A1(E)

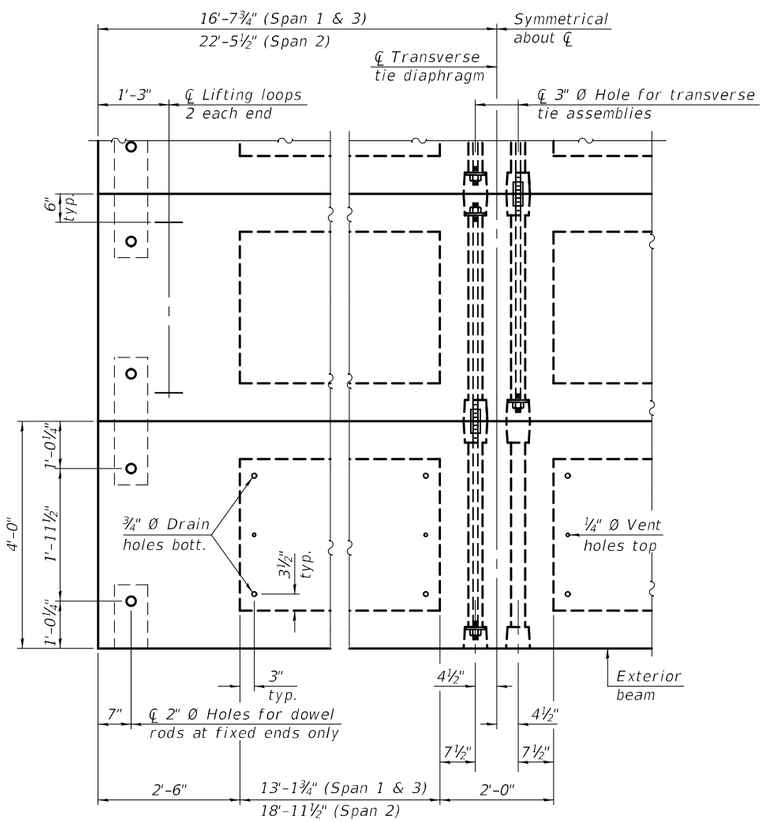

PLAN VIEW

Note:
Connect beams in pairs with the transverse tie configuration shown.

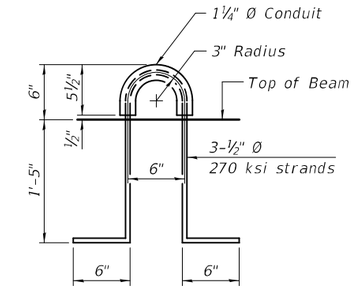

LIFTING LOOP DETAIL

Notes:
Prestressing steel shall be uncoated high strength, low relaxation 7-wire strand, Grade 270. The nominal diameter shall be ½" and the nominal cross-sectional area shall be 0.153 sq. in.
The 1" Ø rods in the transverse tie assembly shall be tightened to a snug fit and the threads set. Pockets on exterior faces of bridge shall be filled with grout after transverse tie assembly is in place.
Two ⅛" fabric adjusting shims of the dimensions of the exterior bearing pad shall be provided for each bearing pad location.
A minimum 2½" Ø lifting pin shall be used to engage the lifting loops during handling.
Corrosion Inhibitor, per Article 1020.05(b)(10) and 1021.07 of the Standard Specifications, shall be used in the concrete for precast prestressed concrete deck beams.
Compressive strength of prestressed concrete, f'c, shall be 6000 psi.
Compressive strength of prestressed concrete at release, f'ci, shall be 5000 psi.
For rail post spacing, see sheet 3 of 14.
For railing and anchorage details, see sheet 10 thru 13 of 14.

BILL OF MATERIAL

Precast Prestressed Conc. Deck Bms. (21" depth)	Sq. Ft.	3,568

PDD-2148-0 1-1-2020

DESIGNED -	MICHAEL A. PAULIONIS	EXAMINED	ENGINEER OF BRIDGE DESIGN
CHECKED -	RYAN P. NEGANGARD		
DRAWN -	ANDRO R. SAMANIEGO	PASSED	ENGINEER OF BRIDGES AND STRUCTURES
CHECKED -	M.A.P. / R.P.N. / G.R.A.		

DATE - MAY 13, 2025
REVISED -
REVISED -

STATE OF ILLINOIS
DEPARTMENT OF TRANSPORTATION

21" X 48" PPC DECK BEAM DETAILS
STRUCTURE NO. 013-0037

SHEET 7 OF 14 SHEETS

F.A.S. RTE.	SECTION	COUNTY	TOTAL SHEETS	SHEET NO.
2704	(11BR-1)BR	CLAY	38	15

CONTRACT NO. 74654
ILLINOIS FED. AID PROJECT

MODEL: 0130037-74654-007
FILE NAME: pw:\\ildot-pw.bentley.com:PWIDOT\Documents\IDOT Offices\Bureau of Bridges and Structures\Projects\0130037\CADD Plans\0130037-74654.dgn
5/13/2025 2:49:42 PM

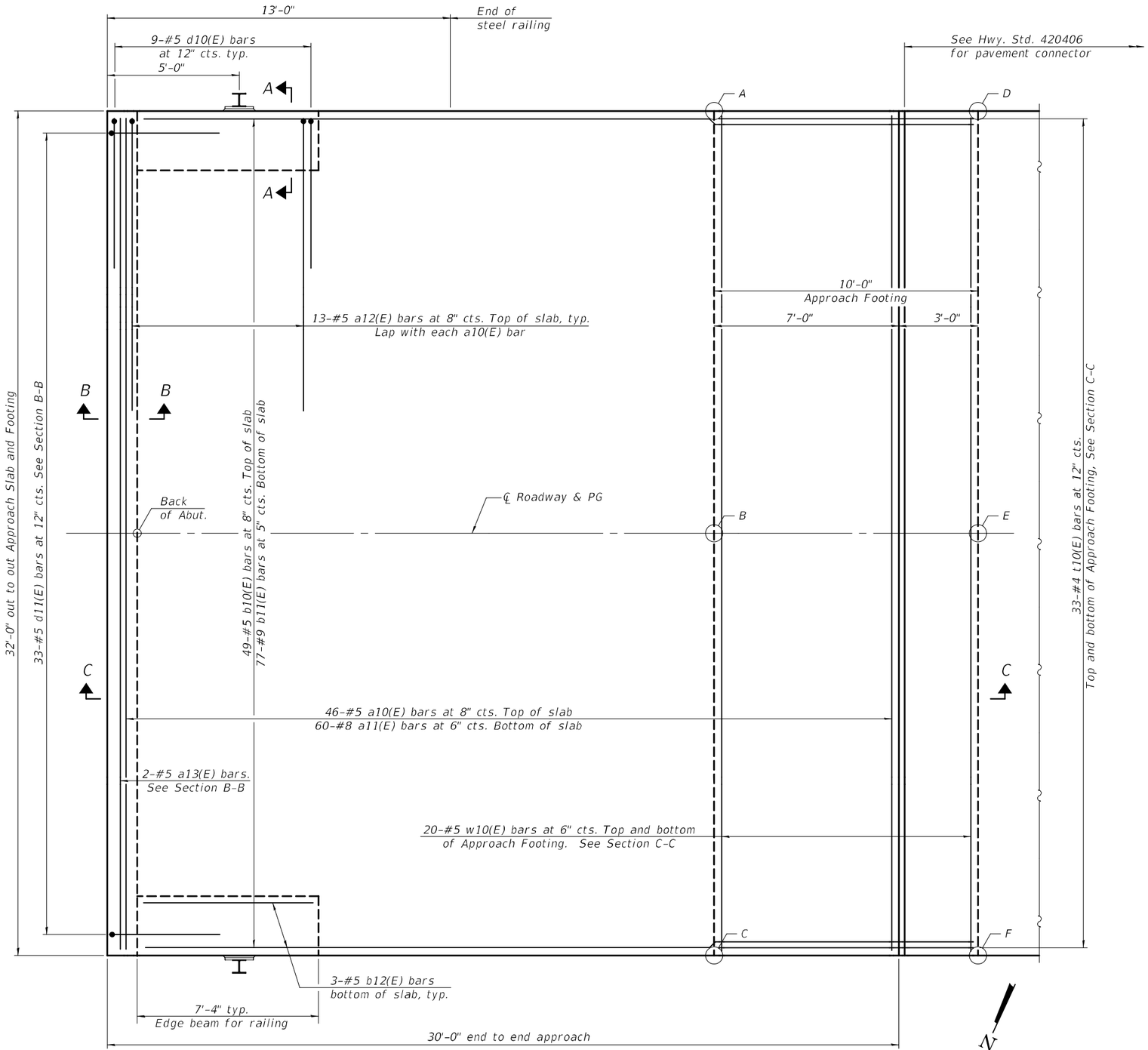

PLAN

(West approach slab shown; East approach slab similar by 180° rotation)

TOP AND BOTTOM ELEVATIONS FOR APPROACH FOOTING

West Approach			East Approach		
Point/ Location	Top	Bottom	Point/ Location	Top	Bottom
A - SE	461.72	460.89	A - NW	461.67	460.84
B - E ℄	461.96	461.13	B - W ℄	461.91	461.08
C - NE	461.72	460.89	C - SW	461.67	460.84
D - SW	461.69	460.86	D - NE	461.64	460.81
E - W ℄	461.93	461.10	E - E ℄	461.88	461.05
F - NW	461.69	460.86	F - SE	461.64	460.81

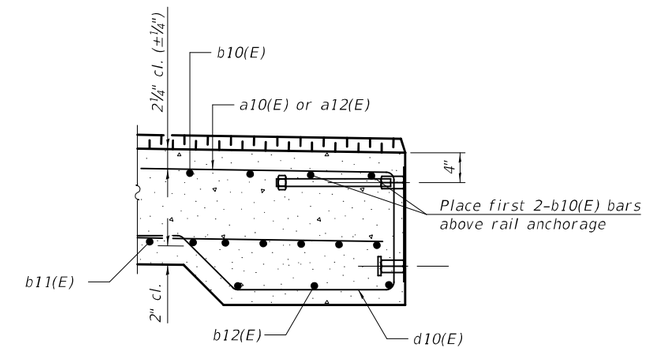

SECTION A-A

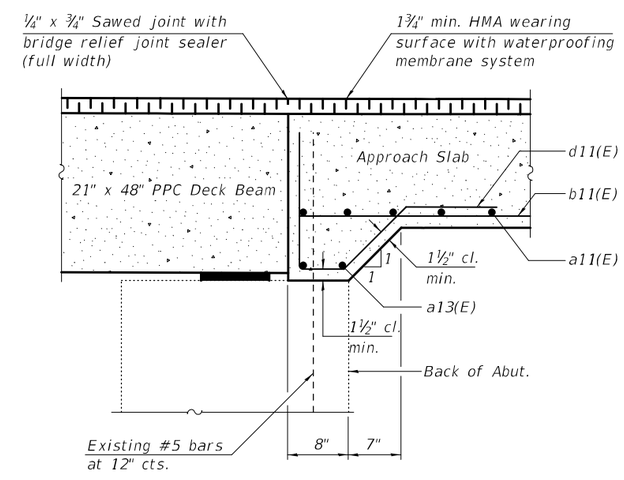

SECTION B-B

Note:
Existing reinforcement bars extending into the removal area shall be cleaned, straightened and incorporated into the new construction. Any reinforcement bars that are damaged during concrete removal operations shall be replaced with an approved bar splicer or anchorage system. Cost shall be included in Concrete Superstructure (Approach Slab).

(Sheet 1 of 2)

MODEL: 0130037-74654-008
FILE NAME: pw:\\ildot-pw.bentley.com:PWIDOT\Documents\IDOT Offices\Bureau of Bridges and Structures\Projects\0130037\CADD Plans\0130037-74654.dgn
5/13/2025 2:49:43 PM

DESIGNED - MICHAEL A. PAULIONIS	EXAMINED	DATE - MAY 13, 2025	STATE OF ILLINOIS DEPARTMENT OF TRANSPORTATION
CHECKED - RYAN P. NEGANGARD	ENGINEER OF BRIDGE DESIGN		
DRAWN - ANDRO R. SAMANIEGO	PASSED	REVISED -	
CHECKED - M.A.P. / R.P.N. / G.R.A.	ENGINEER OF BRIDGES AND STRUCTURES	REVISED -	

BRIDGE APPROACH SLAB DETAILS
STRUCTURE NO. 013-0037

SHEET 8 OF 14 SHEETS

F.A.S. RTE.	SECTION	COUNTY	TOTAL SHEETS	SHEET NO.
2704	(11BR-1)BR	CLAY	38	16

CONTRACT NO. 74654

ILLINOIS | FED. AID PROJECT

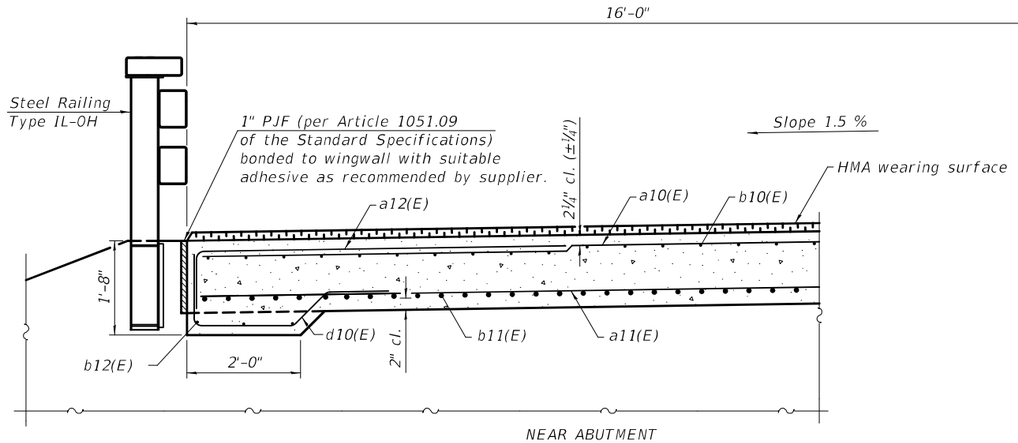

NEAR ABUTMENT

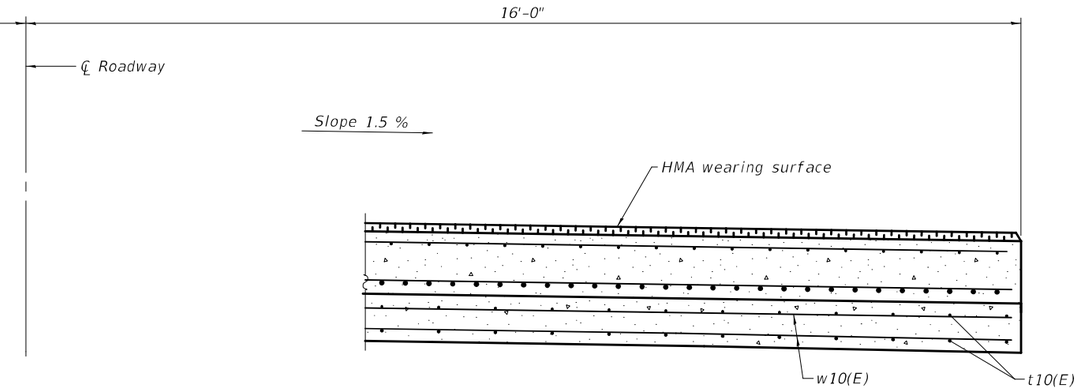

AT APPROACH FOOTING

CROSS SECTION

(Looking East)

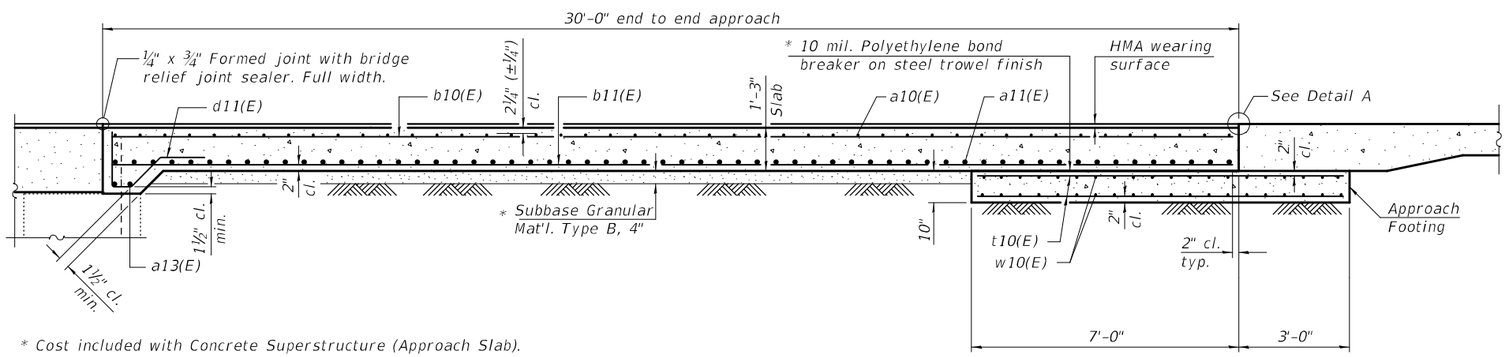

* Cost included with Concrete Superstructure (Approach Slab).

SECTION C-C

Notes:

The joint opening shall be adjusted for temperature per Article 520.04 of the Standard Specifications. However, since this detail is for jointless structures, the length of bridge used to calculate the adjustment shall be equal to half the total bridge length plus the length of the bridge approach slab.

Approach slab shall be paid for as Concrete Superstructure (Approach Slab).

Approach footing concrete shall be paid for as Concrete Structures.

The approach footing maximum applied service bearing pressure (Qmax) = 2.0 ksf.

Cost of excavation for approach footing included with Concrete Structures.

For railing details, see sheet 10 of 14.

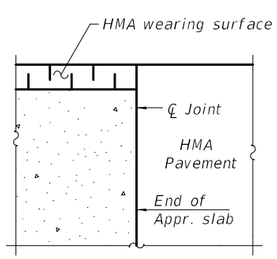

FLEXIBLE PAVEMENT

DETAIL A

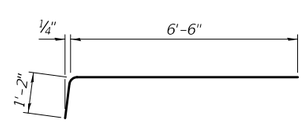

BAR a12(E)

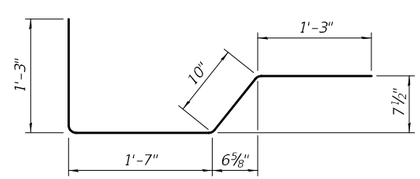

BAR d10(E)

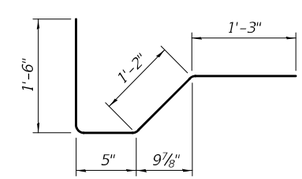

BAR d11(E)

TWO APPROACHES BILL OF MATERIAL

Bar	No.	Size	Length	Shape
a10(E)	92	#5	31'-8"	
a11(E)	120	#8	31'-8"	
a12(E)	52	#5	7'-8"	
a13(E)	4	#5	31'-8"	
b10(E)	98	#5	29'-8"	
b11(E)	154	#9	29'-8"	
b12(E)	12	#5	7'-0"	
d10(E)	36	#5	4'-11"	
d11(E)	66	#5	4'-4"	
t10(E)	132	#4	9'-8"	
w10(E)	80	#5	31'-8"	
Concrete Superstructure (Approach Slab)			Cu. Yd.	91.2
Concrete Structures			Cu. Yd.	19.8
Reinforcement Bars, Epoxy Coated			Pound	36,360

(Sheet 2 of 2)

DESIGNED - MICHAEL A. PAULIONIS	EXAMINED	DATE - MAY 13, 2025	STATE OF ILLINOIS DEPARTMENT OF TRANSPORTATION
CHECKED - RYAN P. NEGANGARD	ENGINEER OF BRIDGE DESIGN		
DRAWN - ANDRO R. SAMANIEGO	PASSED	REVISED -	
CHECKED - M.A.P. / R.P.N. / G.R.A.	ENGINEER OF BRIDGES AND STRUCTURES	REVISED -	

BRIDGE APPROACH SLAB DETAILS
STRUCTURE NO. 013-0037

SHEET 9 OF 14 SHEETS

F.A.S. RTE.	SECTION	COUNTY	TOTAL SHEETS	SHEET NO.
2704	(11BR-1)BR	CLAY	38	17

CONTRACT NO. 74654

ILLINOIS FED. AID PROJECT

MODEL: 0130037-74654-009
FILE NAME: pw:\\ildot-pw.bentley.com:PWIDOT\Documents\IDOT Offices\Bureau of Bridges and Structures\Projects\0130037\CADD Plans\0130037-74654.dgn
5/13/2025 2:49:44 PM

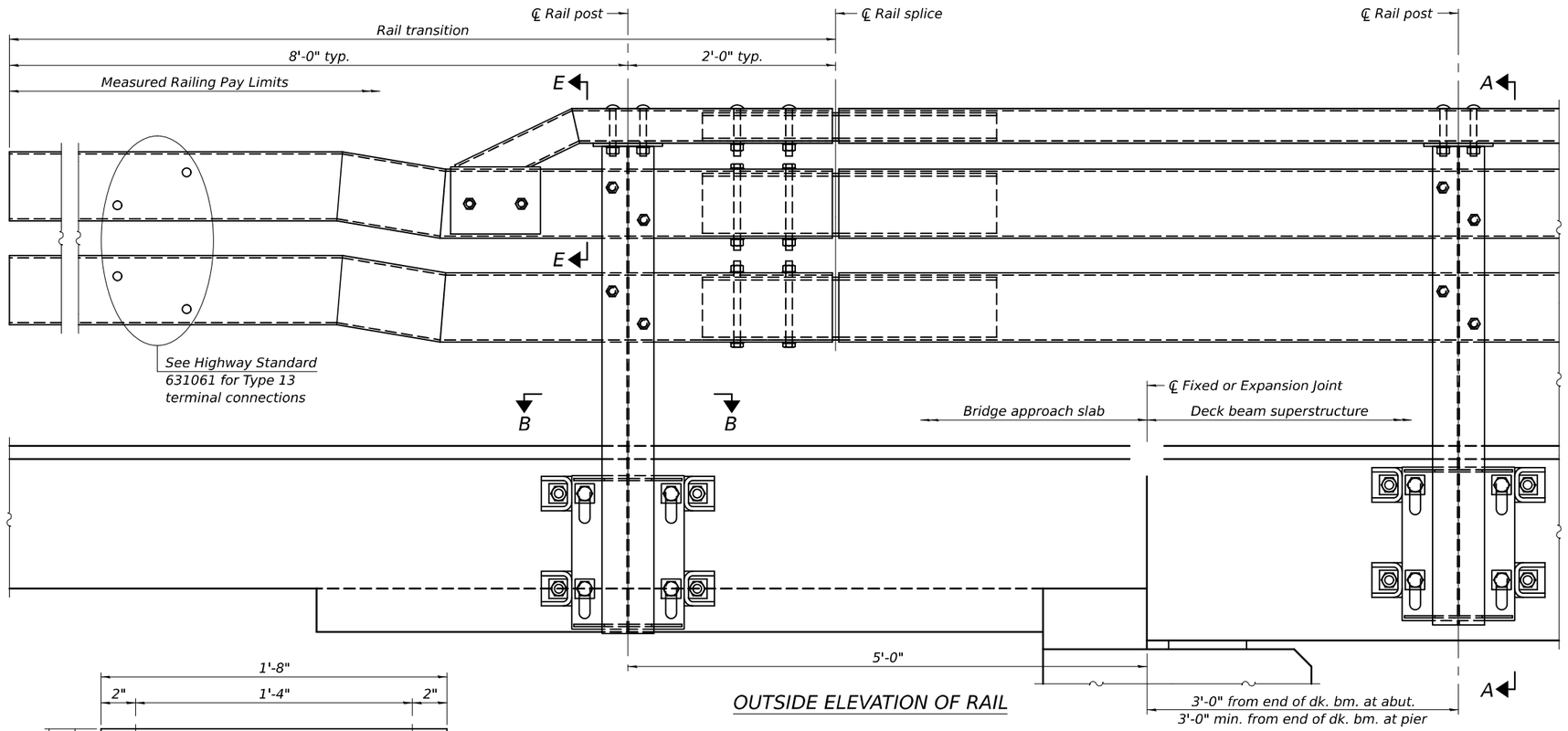

OUTSIDE ELEVATION OF RAIL

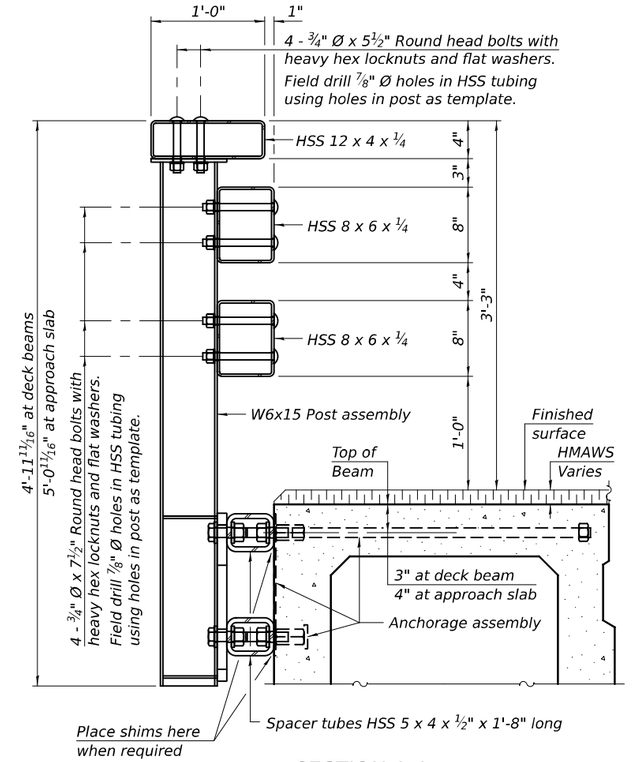

SECTION A-A

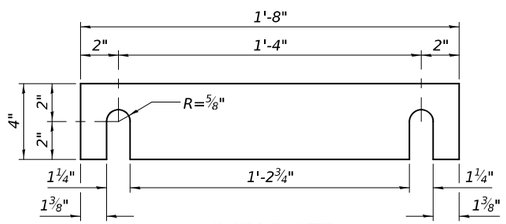

SHIM PLATE

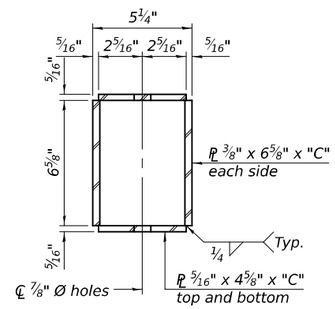

SECTION C-C

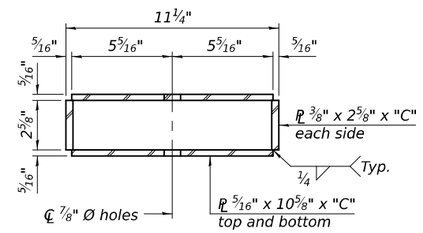

SECTION D-D

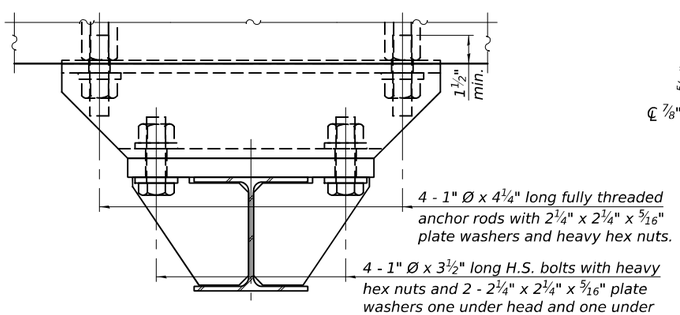

SECTION B-B

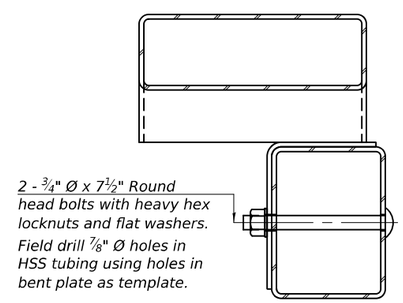

SECTION E-E

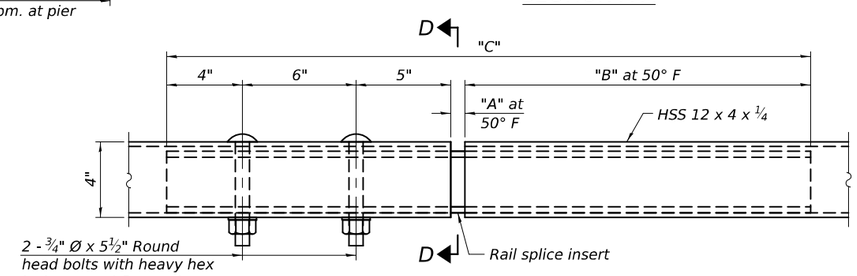

TOP RAIL SPLICE ELEVATION

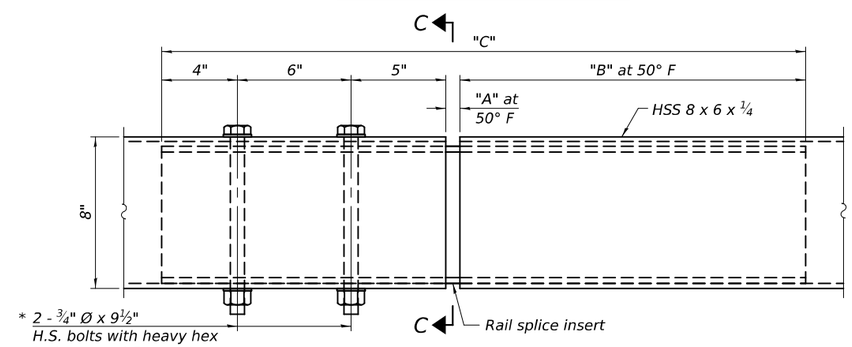

MIDDLE & BOTTOM RAIL SPLICE ELEVATION

* Bolt orientation shown for middle rail. Flip for bottom rail.

RAILING CRITERIA

MASH 2016 Test Level	4
Rail system weight (plf)	120
Max post spacing	8'-0"
HMAWS thickness range (in.)	1½ - 4¼

SPLICE DIMENSIONS

Location	T	A	B	C
All locs. not over exp. jts.	0	½"	1'-6"	2'-9½"
Over Strip Seal Jt.	≤4"	2½"	1'-8"	3'-1½"

T = ; total movement along centerline of roadway at expansion joint.

R-40HMAWS-AS 4-4-2025

(Sheet 1 of 4)

DESIGNED - MICHAEL A. PAULIONIS	EXAMINED	DATE - MAY 13, 2025	STATE OF ILLINOIS DEPARTMENT OF TRANSPORTATION
CHECKED - RYAN P. NEGANGARD	ENGINEER OF BRIDGE DESIGN		
DRAWN - ANDRO R. SAMANIEGO	PASSED	REVISED -	
CHECKED - M.A.P. / R.P.N. / G.R.A.	ENGINEER OF BRIDGES AND STRUCTURES	REVISED -	

STEEL RAILING, TYPE IL-OH
STRUCTURE NO. 013-0037

SHEET 10 OF 14 SHEETS

F.A.S. RTE.	SECTION	COUNTY	TOTAL SHEETS	SHEET NO.
2704	(11BR-1)BR	CLAY	38	18

CONTRACT NO. 74654

ILLINOIS FED. AID PROJECT

MODEL: 0130037-74654-010
FILE NAME: pw://ildot-pw.bentley.com:PWIDOT/Documents/IDOT Offices/Bureau of Bridges and Structures/OBM Projects/0130037/CADData/Structures/0130037-74654.dgn
5/13/2025 2:17:25 PM

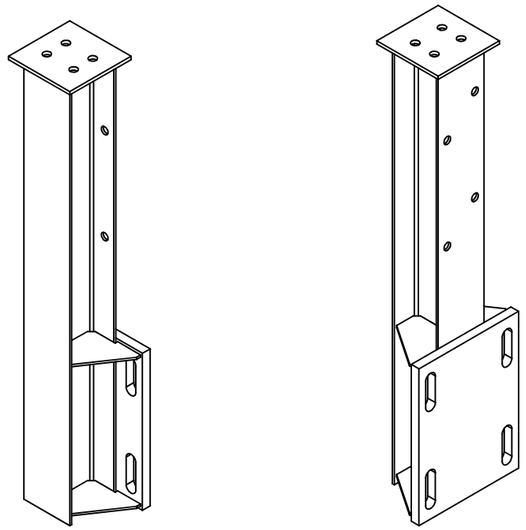

ISOMETRIC VIEWS POST ASSEMBLY

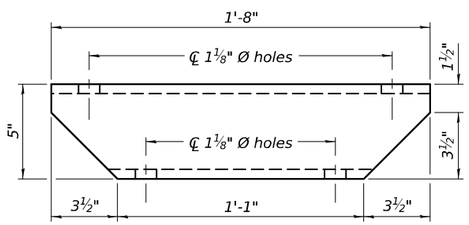

SPACER TUBE PLAN

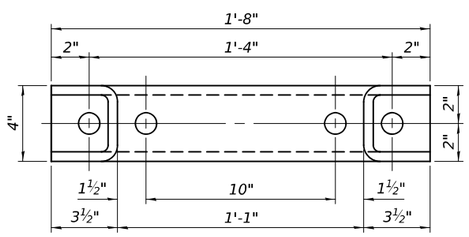

SPACER TUBE ELEVATION

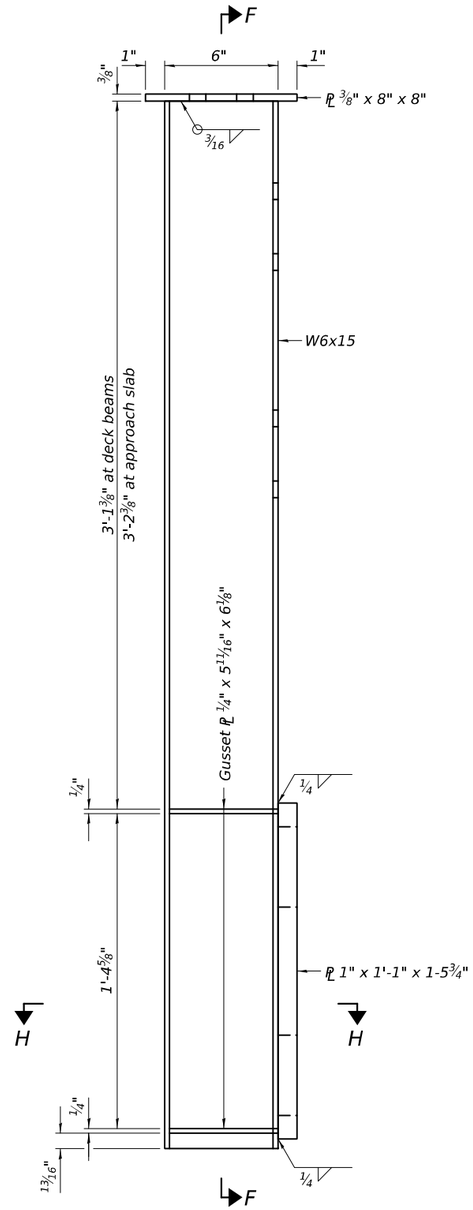

SIDE ELEVATION POST ASSEMBLY

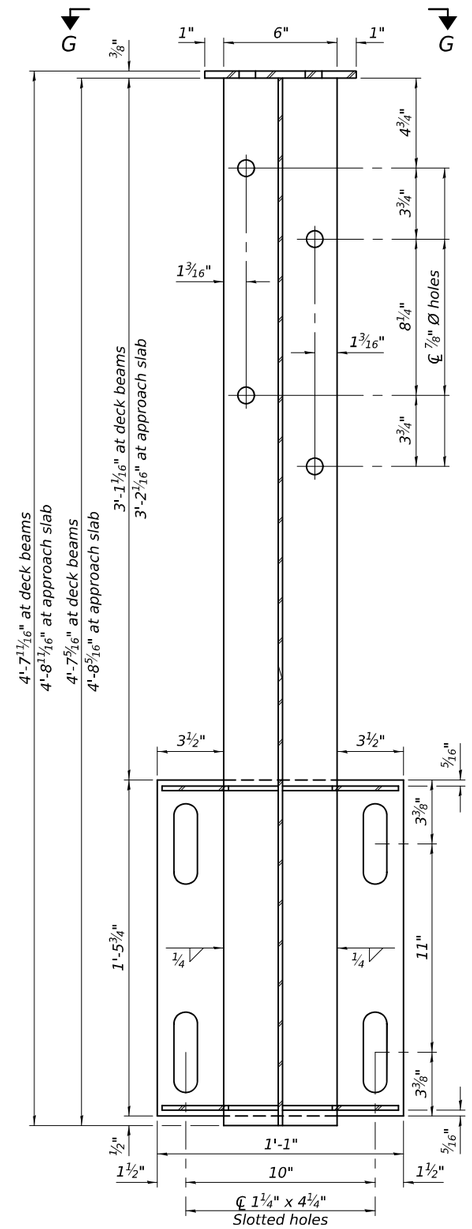

SECTION F-F

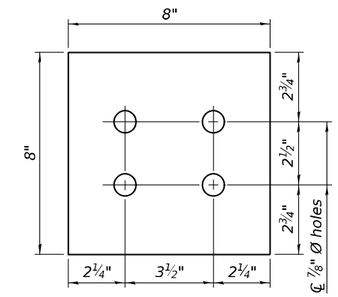

VIEW G-G
(Showing top plate)

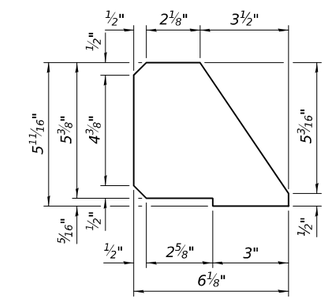

GUSSET PLATE

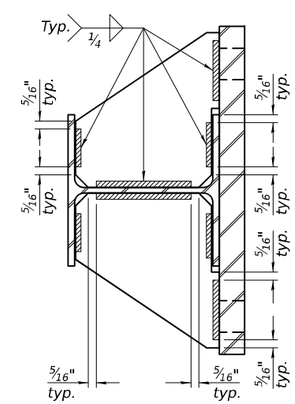

SECTION H-H
(Showing gusset plate welds)

R-40HMAWS-AS 4-4-2025

(Sheet 2 of 4)

DESIGNED - MICHAEL A. PAULIONIS	EXAMINED	ENGINEER OF BRIDGE DESIGN	DATE - MAY 13, 2025	STATE OF ILLINOIS DEPARTMENT OF TRANSPORTATION	STEEL RAILING, TYPE IL-OH STRUCTURE NO. 013-0037
CHECKED - RYAN P. NEGANGARD					
DRAWN - ANDRO R. SAMANIEGO	PASSED	ENGINEER OF BRIDGES AND STRUCTURES	REVISED -		
CHECKED - M.A.P. / R.P.N. / G.R.A.			REVISED -		SHEET 11 OF 14 SHEETS

F.A.S. RTE.	SECTION	COUNTY	TOTAL SHEETS	SHEET NO.
2704	(11BR-1)BR	CLAY	38	19
		CONTRACT NO. 74654		
		ILLINOIS	FED. AID PROJECT	

MODEL: 0130037-74654-011
FILE NAME: pw://ildot-pw.bentley.com:PWIDOT/Documents/IDOT Offices/Bureau of Bridges and Structures/OBM Projects/0130037/CADData/Structures/0130037-74654.dgn
5/13/2025 2:17:26 PM

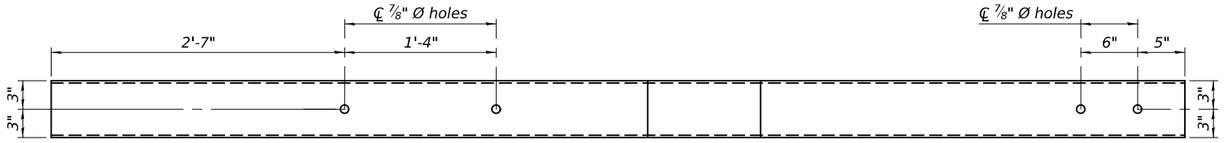

PLAN OF MIDDLE AND BOTTOM RAIL TRANSITION

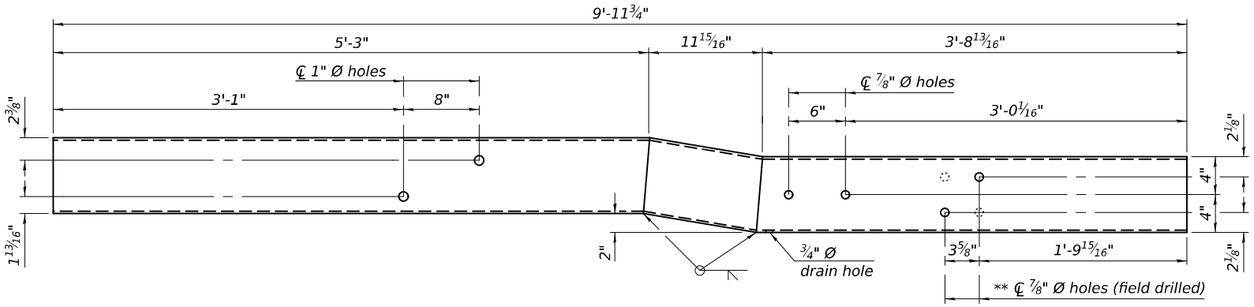

INSIDE ELEVATION OF LEFT MIDDLE RAIL TRANSITION

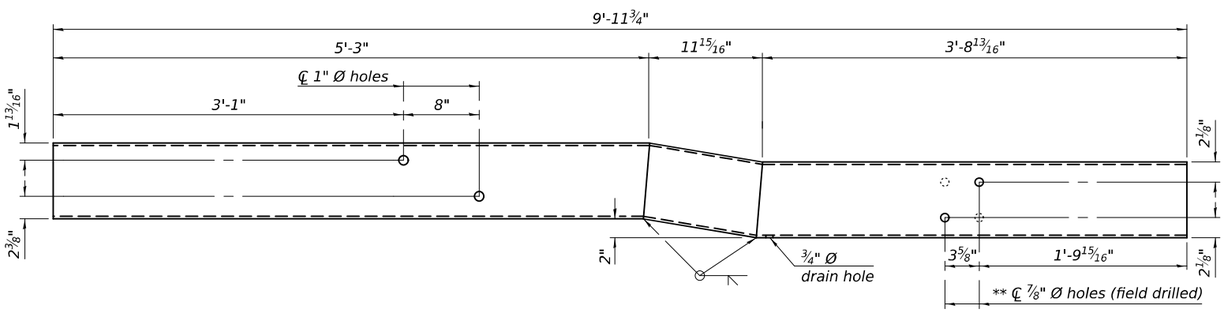

INSIDE ELEVATION OF LEFT BOTTOM RAIL TRANSITION

** Hole orientation is flipped as shown with the dashed holes for the right side piece.

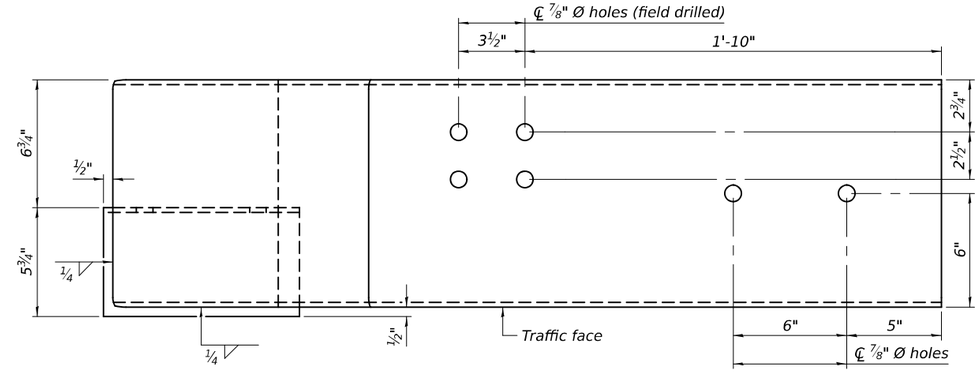

PLAN OF LEFT TOP RAIL TERMINATION ASSEMBLY

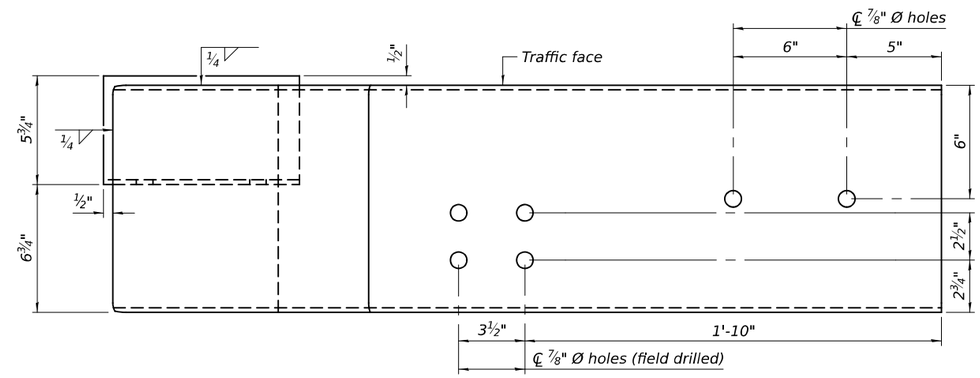

PLAN OF RIGHT TOP RAIL TERMINATION ASSEMBLY

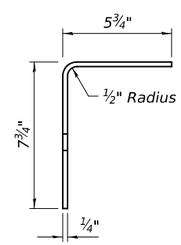

VIEW I-I

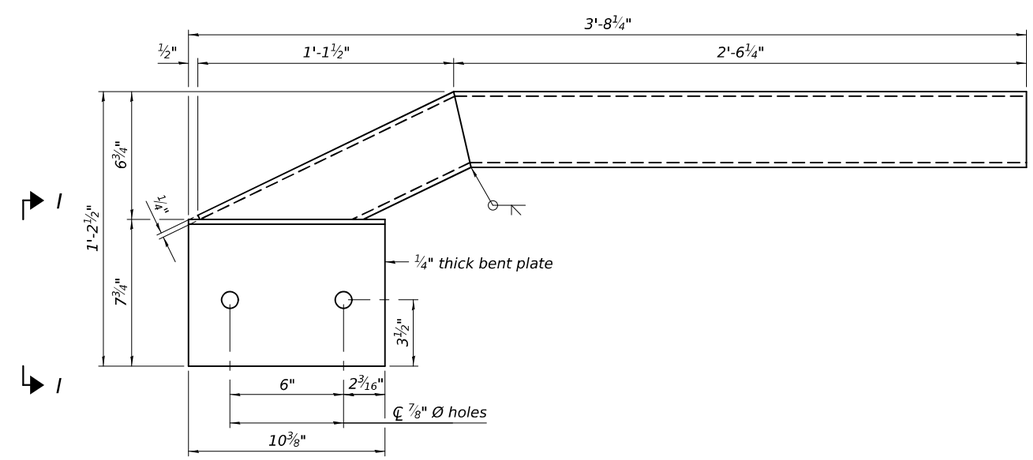

INSIDE ELEVATION OF LEFT TOP RAIL TERMINATION ASSEMBLY

(Right Similar)

R-40HMAWS-AS 4-4-2025

(Sheet 3 of 4)

DESIGNED -	MICHAEL A. PAULIONIS	EXAMINED	ENGINEER OF BRIDGE DESIGN
CHECKED -	RYAN P. NEGANGARD	PASSED	ENGINEER OF BRIDGES AND STRUCTURES
DRAWN -	ANDRO R. SAMANIEGO	DATE -	MAY 13, 2025
CHECKED -	M.A.P. / R.P.N. / G.R.A.	REVISED -	
		REVISED -	

STATE OF ILLINOIS
DEPARTMENT OF TRANSPORTATION

STEEL RAILING, TYPE IL-OH
STRUCTURE NO. 013-0037

SHEET 12 OF 14 SHEETS

F.A.S. RTE.	SECTION	COUNTY	TOTAL SHEETS	SHEET NO.
2704	(11BR-1)BR	CLAY	38	20

CONTRACT NO. 74654

ILLINOIS | FED. AID PROJECT

MODEL: 0130037-74654-012
FILE NAME: pw://ildot-pw.bentley.com:PWIDOT/Documents/IDOT Offices/Bureau of Bridges and Structures/OBM Projects/0130037/CADData/Structures/0130037-74654.dgn
5/13/2025 2:17:26 PM

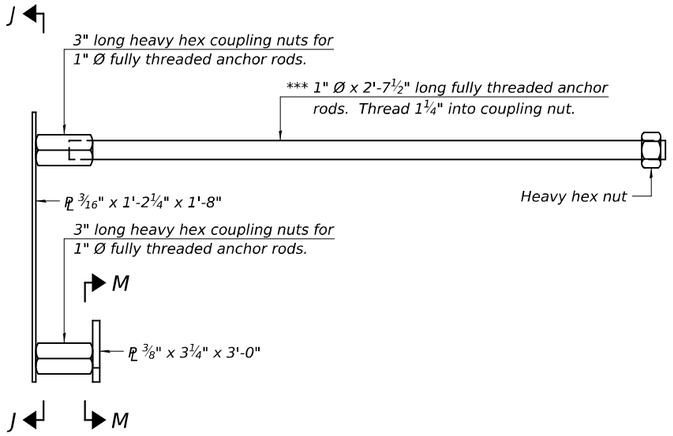

ANCHORAGE ASSEMBLY

(for 17" deck beams)

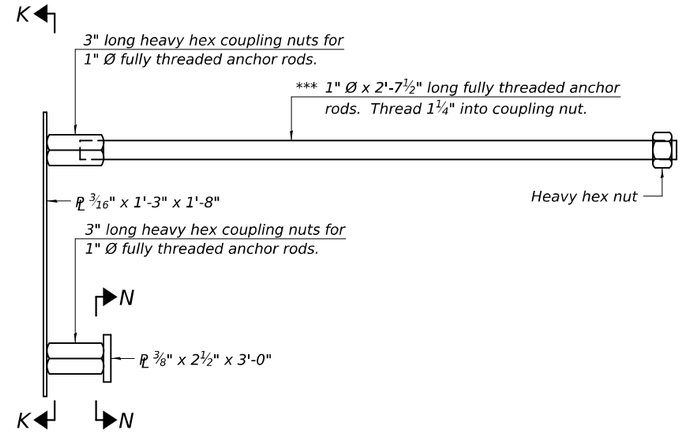

ANCHORAGE ASSEMBLY

(for 21" thru 42" deck beams)

*** For skewed deck beams use 1" Ø x 1'-3" long fully threaded anchor rods at acute corners of beam ends.

Notes:

All plates shall be AASHTO M270 grade 50.

All HSS tubing shall be ASTM A500 grade C.

All heavy hex nuts including heavy hex coupling nuts shall be according to ASTM A563 grade DH.

All fully threaded anchor rods shall be ASTM F1554 grade 105.

All round head bolts shall be ASTM A449.

All steel rail elements including shims shall be galvanized according to Article 509.05 of the Standard Specifications.

Rail splice inserts may be built out of 2 – 3/8" bent plates in lieu of the 4 plate rail splice inserts shown, provided the outside dimensions are matched.

One 3/16" thick shim per post and a sufficient number of shims of various thicknesses, built to the dimensions shown in the shim plate detail, shall be provided to adjust posts for plumbness and horizontal alignment. Cost included with Steel Railing, Type IL-OH.

The spacer tubes shall be fastened to the deck beams and approach slab snug tight and given an additional 1/3 turn. The 1" diameter high strength bolts used to connect the spacer tubes to the post assemblies shall be tightened according to Article 505.04(f)(2) of the Standard Specifications.

All HSS tubing serving as railing shall be CVN tested according to Article 1006.34(b) of the Standard Specifications.

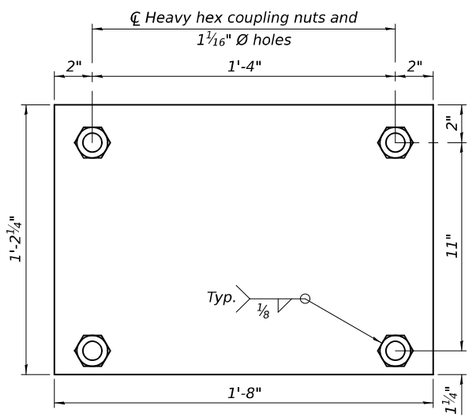

SECTION J-J

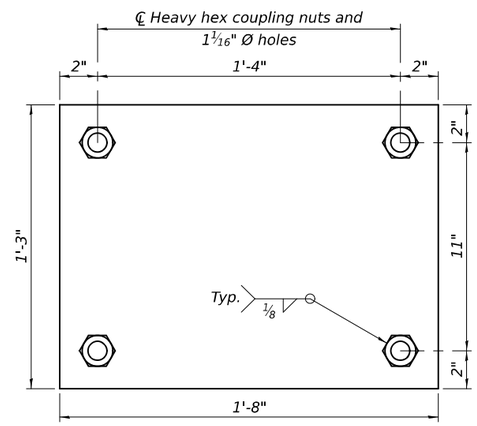

SECTION K-K

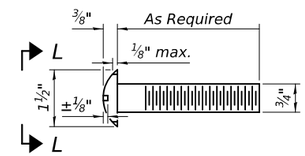

ROUND HEAD BOLT DETAIL

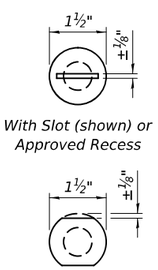

VIEW L-L

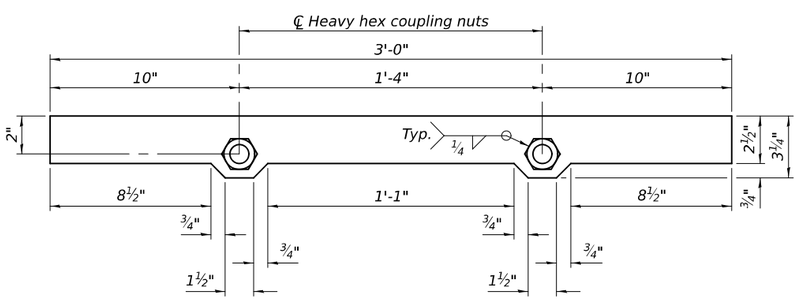

SECTION M-M

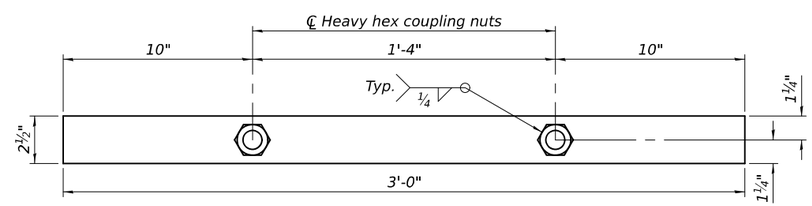

SECTION N-N

BILL OF MATERIAL

Item	Unit	Quantity
Steel Railing, Type IL-OH	Foot	275

R-40HMAWS-AS 4-4-2025

(Sheet 4 of 4)

DESIGNED - MICHAEL A. PAULIONIS	EXAMINED	DATE - MAY 13, 2025	
CHECKED - RYAN P. NEGANGARD	ENGINEER OF BRIDGE DESIGN		
DRAWN - ANDRO R. SAMANIEGO	PASSED	REVISED -	
CHECKED - M.A.P. / R.P.N. / G.R.A.	ENGINEER OF BRIDGES AND STRUCTURES	REVISED -	

STATE OF ILLINOIS
DEPARTMENT OF TRANSPORTATION

STEEL RAILING, TYPE IL-OH
STRUCTURE NO. 013-0037

SHEET 13 OF 14 SHEETS

F.A.S. RTE.	SECTION	COUNTY	TOTAL SHEETS	SHEET NO.
2704	(11BR-1)BR	CLAY	38	21
		CONTRACT NO. 74654		
		ILLINOIS	FED. AID PROJECT	

MODEL: 0130037-74654-013
FILE NAME: pw://ildot-pw.bentley.com:PWIDOT/Documents/IDOT Offices/Bureau of Bridges and Structures/OBM Projects/0130037/CADData/Structures/0130037-74654.dgn
5/13/2025 2:17:26 PM

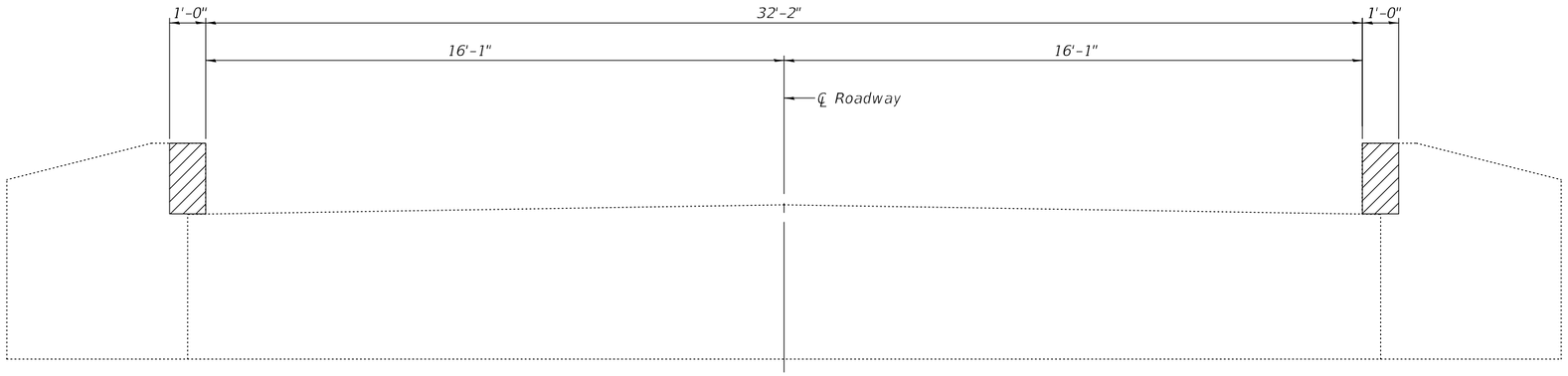

ELEVATION
(Looking at front face)

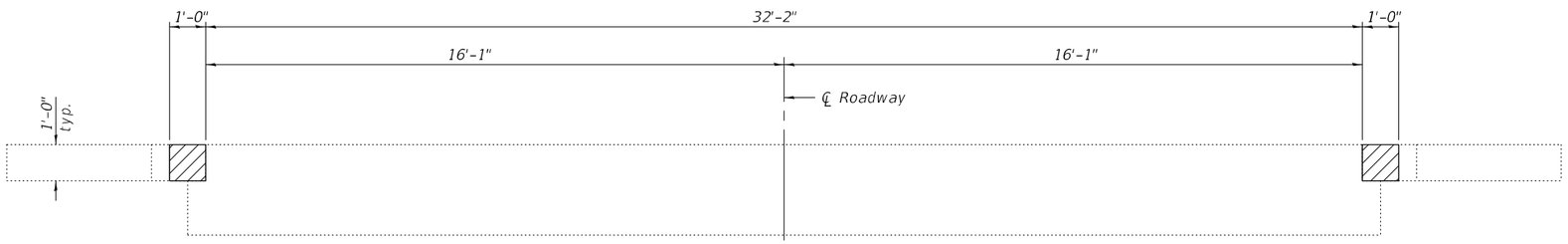

PLAN

BILL OF MATERIAL

Bar	No.	Size	Length	Shape
h(E)	8	#5	2'-2"	
v(E)	4	#5	2'-7"	
Concrete Removal			Cu. Yd.	0.3
Concrete Structures			Cu. Yd.	0.3
Reinforcement Bars, Epoxy Coated			Pound	30

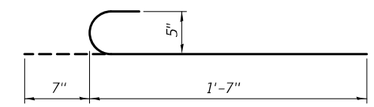

BAR h(E)

Notes:
Hatched areas indicate areas of Concrete Removal.
Existing vertical reinforcement bars extending into the new construction shall be cleaned, straightened and incorporated into the new construction. Cost included with Concrete Removal.

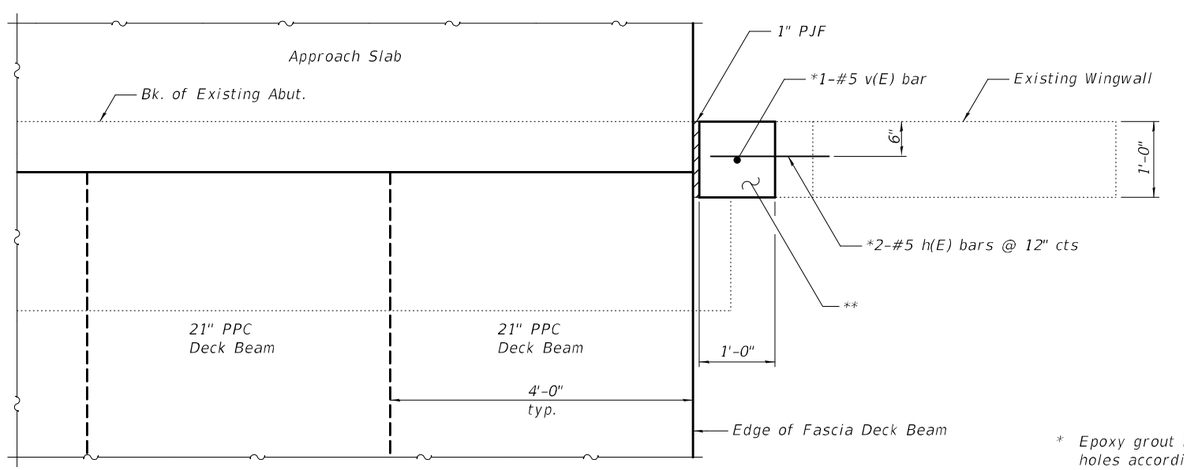

PLAN
(Typical all wingwalls)

* Epoxy grout h(E) & v(E) bars in 9" min. drilled holes according to Section 584 of Standard Specifications.

** Concrete to be placed after PPC deck beams have been erected and doweled into place.

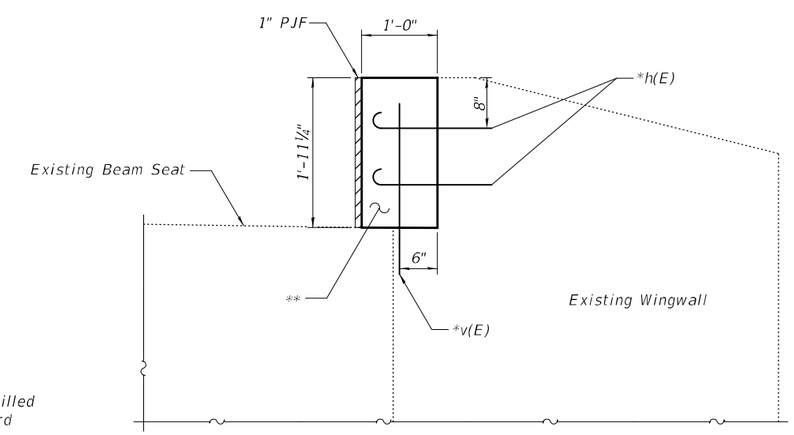

ELEVATION

MODEL: 0130037-74654-014
FILE NAME: pw:\\ildo-pw.bentley.com:PWIDOT\Documents\IDOT Offices\Bureau of Bridges and Structures\Projects\0130037\CADD Plans\0130037-74654.dgn
5/13/2025 2:49:46 PM

DESIGNED - MICHAEL A. PAULIONIS	EXAMINED	DATE - MAY 13, 2025	
CHECKED - RYAN P. NEGANGARD		REVISED -	
DRAWN - ANDRO R. SAMANIEGO	PASSED	REVISED -	
CHECKED - M.A.P. / R.P.N. / G.R.A.			

ENGINEER OF BRIDGE DESIGN
ENGINEER OF BRIDGES AND STRUCTURES

STATE OF ILLINOIS
DEPARTMENT OF TRANSPORTATION

WINGWALL DETAILS
STRUCTURE NO. 013-0037
SHEET 14 OF 14 SHEETS

F.A.S. RTE.	SECTION	COUNTY	TOTAL SHEETS	SHEET NO.
2704	(11BR-1)BR	CLAY	38	22

CONTRACT NO. 74654
ILLINOIS FED. AID PROJECT

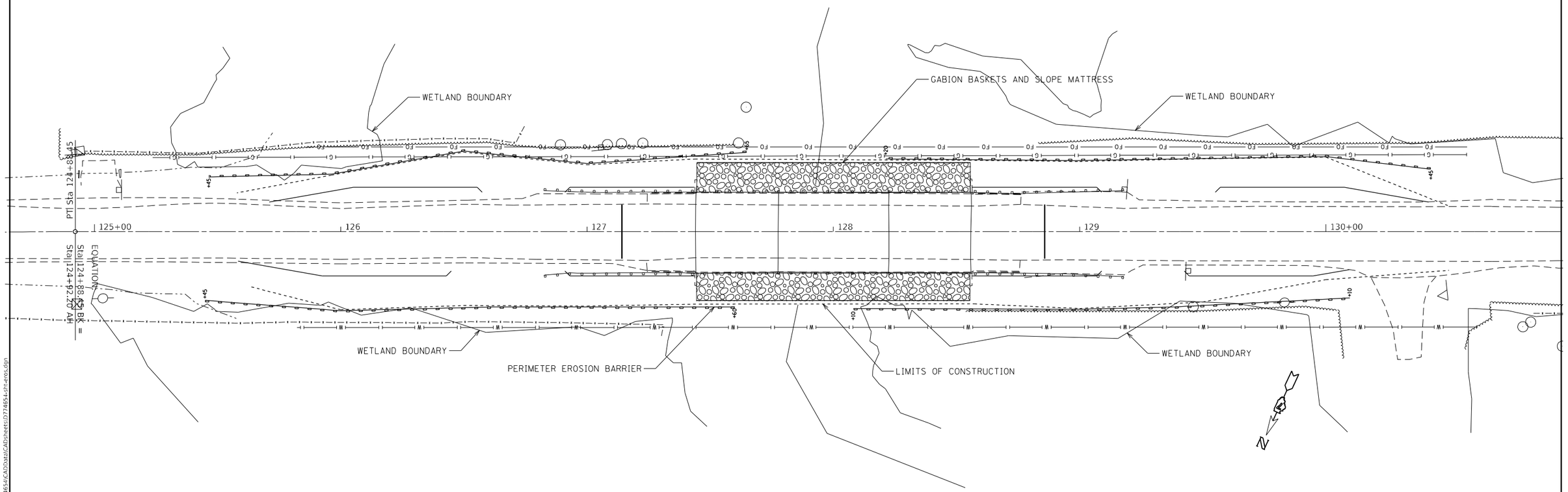

PERIMETER EROSION BARRIER		
LT STA 125+45 TO 127+65	220	FOOT
RT STA 125+45 TO 127+60	215	FOOT
LT STA 128+20 TO 130+45	225	FOOT
RT STA 128+10 TO 130+10	200	FOOT
TOTAL	860	FOOT

PERIMETER EROSION BARRIER
(TO BE CONSTRUCTED PRIOR TO PLACING
AGGREGATE SHOULDERS TYPE A)

NOTE: NO ENCROACHMENT INTO WETLAND AREAS
BEYOND LIMITS OF CONSTRUCTION WILL
BE ALLOWED EXCEPT THAT WHICH IS REQUIRED
TO PLACE PERIMETER EROSION BARRIER.

MODEL: Default
FILE NAME: pw:\\ildot-pw.bentley.com:PWIDOT\Documents\IDOT Offices\District 7\Projects\74654\CADData\CADsheets\0774654-sht-eros.dgn

USER NAME = jessica.hille	DESIGNED -	REVISED -
	DRAWN -	REVISED -
PLOT SCALE = 40.0000 ' / in.	CHECKED -	REVISED -
PLOT DATE = 1/29/2025	DATE -	REVISED -

STATE OF ILLINOIS
DEPARTMENT OF TRANSPORTATION

EROSION CONTROL PLAN

SCALE: SHEET OF SHEETS STA. TO STA.

F.A.S. RTE.	SECTION	COUNTY	TOTAL SHEETS	SHEET NO.
2704	(11BR-1)BR	CLAY	38	23

CONTRACT NO. 74654

ILLINOIS FED. AID PROJECT

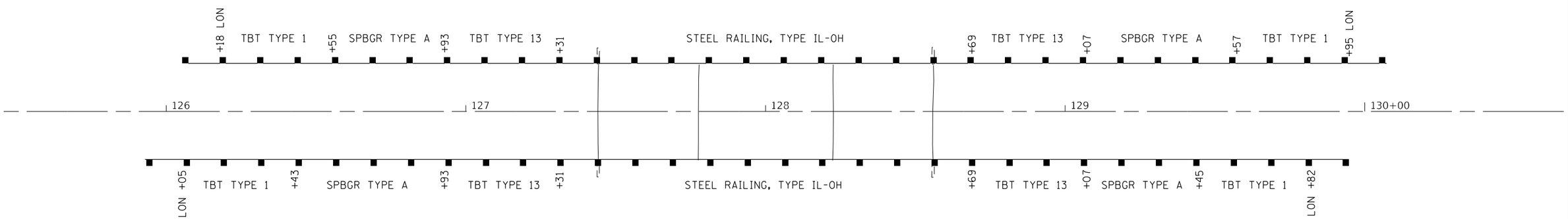

STATION	TO	STATION	SIDE	STEEL PLATE BEAM GUARDRAIL, TYPE A, 6 FOOT POSTS	TRAFFIC BARRIER TERMINAL, TYPE 1 (SPECIAL)	TRAFFIC BARRIER TERMINAL, TYPE 13	GUARDRAIL REFLECTORS, TYPE A	TERMINAL MARKER - DIRECT APPLIED
				FOOT	EACH	EACH	EACH	EACH
125+93.00	TO	126+43.00	RT		1			1
126+43.00	TO	129+93.00	RT	50.0			3	
126+93.00	TO	127+31.00	RT			1		
126+05.00	TO	126+55.00	LT		1			1
126+55.00	TO	126+93.00	LT	37.5			2	
126+93.00	TO	127+31.00	LT			1		
128+69.00	TO	129+07.00	RT			1		
129+07.00	TO	129+45.00	RT	37.5			2	
129+45.00	TO	129+95.00	RT		1			1
128+69.00	TO	129+07.00	LT			1		
129+07.00	TO	129+57.00	LT	50.0			3	
129+57.00	TO	130+07.00	LT		1			1
			TOTALS=	175	4	4	10	4

MODEL: Default
FILE NAME: pw:\\ildot-pw.bentley.com:PWIDOT\Documents\IDOT Offices\District 7\Projects\74654\CADData\CADsheets\0274654-sht-details.dgn

USER NAME = jessica.hille	DESIGNED -	REVISED -
	DRAWN -	REVISED -
PLOT SCALE = 100.0000 ' / in.	CHECKED -	REVISED -
PLOT DATE = 1/29/2025	DATE -	REVISED -

STATE OF ILLINOIS
DEPARTMENT OF TRANSPORTATION

GUARDRAIL DETAILS

SCALE: | SHEET OF SHEETS | STA. TO STA.

F.A.S. RTE.	SECTION	COUNTY	TOTAL SHEETS	SHEET NO.
2704	(11BR-1)BR	CLAY	38	24

CONTRACT NO. 74654

ILLINOIS | FED. AID PROJECT

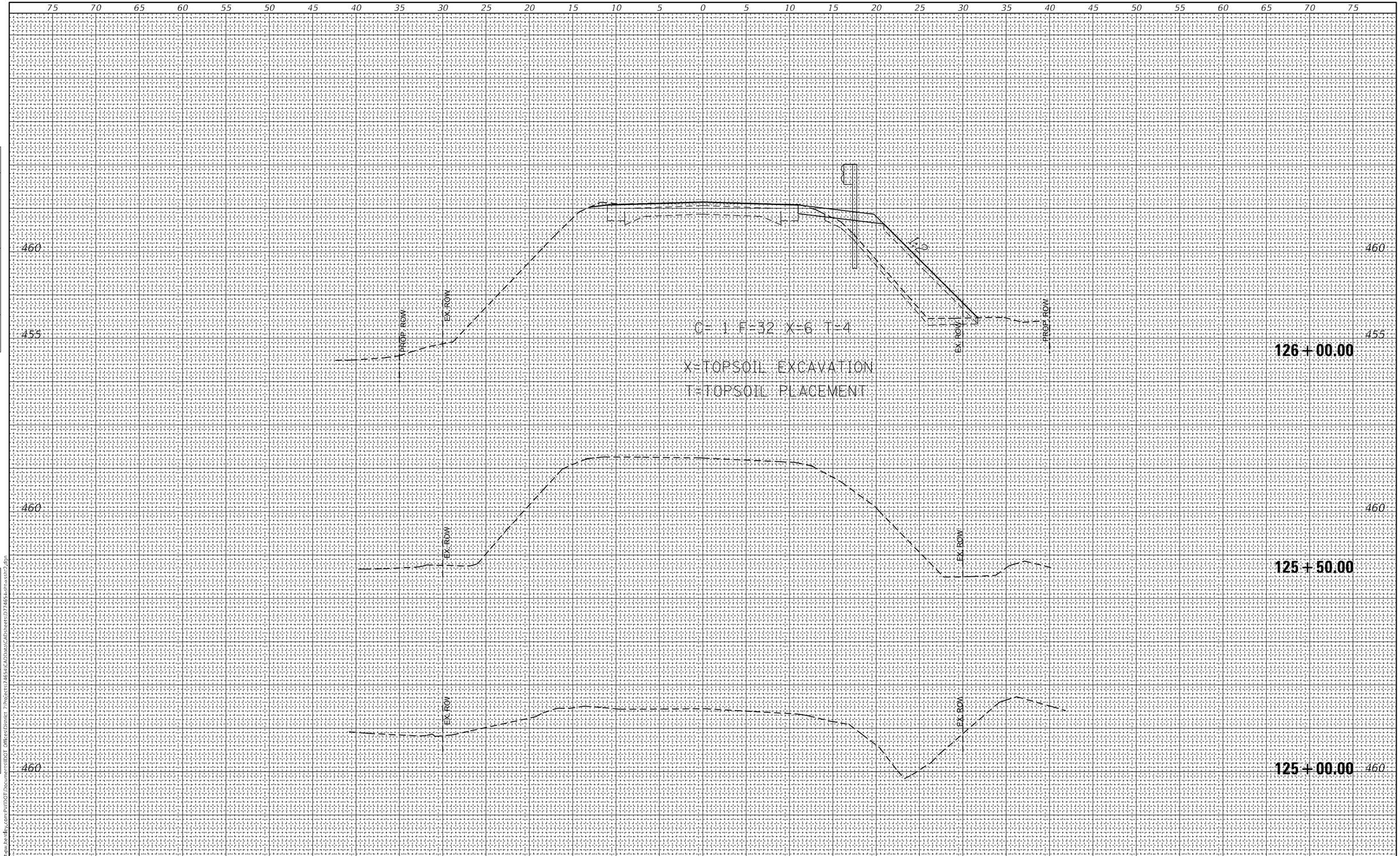

FINAL SURVEY		BY	DATE
	SURVEYED		
	PLOTTED		
NOTE BOOK	TEMPLATE		
	AREAS		
NO.	AREAS CHECKED		

ORIGINAL SURVEY		BY	DATE
	SURVEYED		
	PLOTTED		
NOTE BOOK	TEMPLATE		
	AREAS		
NO.	AREAS CHECKED		

MODEL: Default
FILE NAME: pw:\\ildot-pw.bentley.com:PWIDOT\Documents\IDOT Offices\District 7\Projects\74654\CAD\Data\CADsheets\074654-sht-xsth2.dgn

USER NAME = jessica.hille	DESIGNED -	REVISED -	
	DRAWN -	REVISED -	
PLOT SCALE = 10.0000 ' / in.	CHECKED -	REVISED -	
PLOT DATE = 1/29/2025	DATE -	REVISED -	

STATE OF ILLINOIS
DEPARTMENT OF TRANSPORTATION

ROADWAY CROSS SECTIONS

SCALE: | SHEET OF SHEETS | STA. TO STA.

F.A.S. RTE.	SECTION	COUNTY	TOTAL SHEETS	SHEET NO.
2704	(11BR-1)BR	CLAY	38	25

CONTRACT NO. 74654

ILLINOIS | FED. AID PROJECT

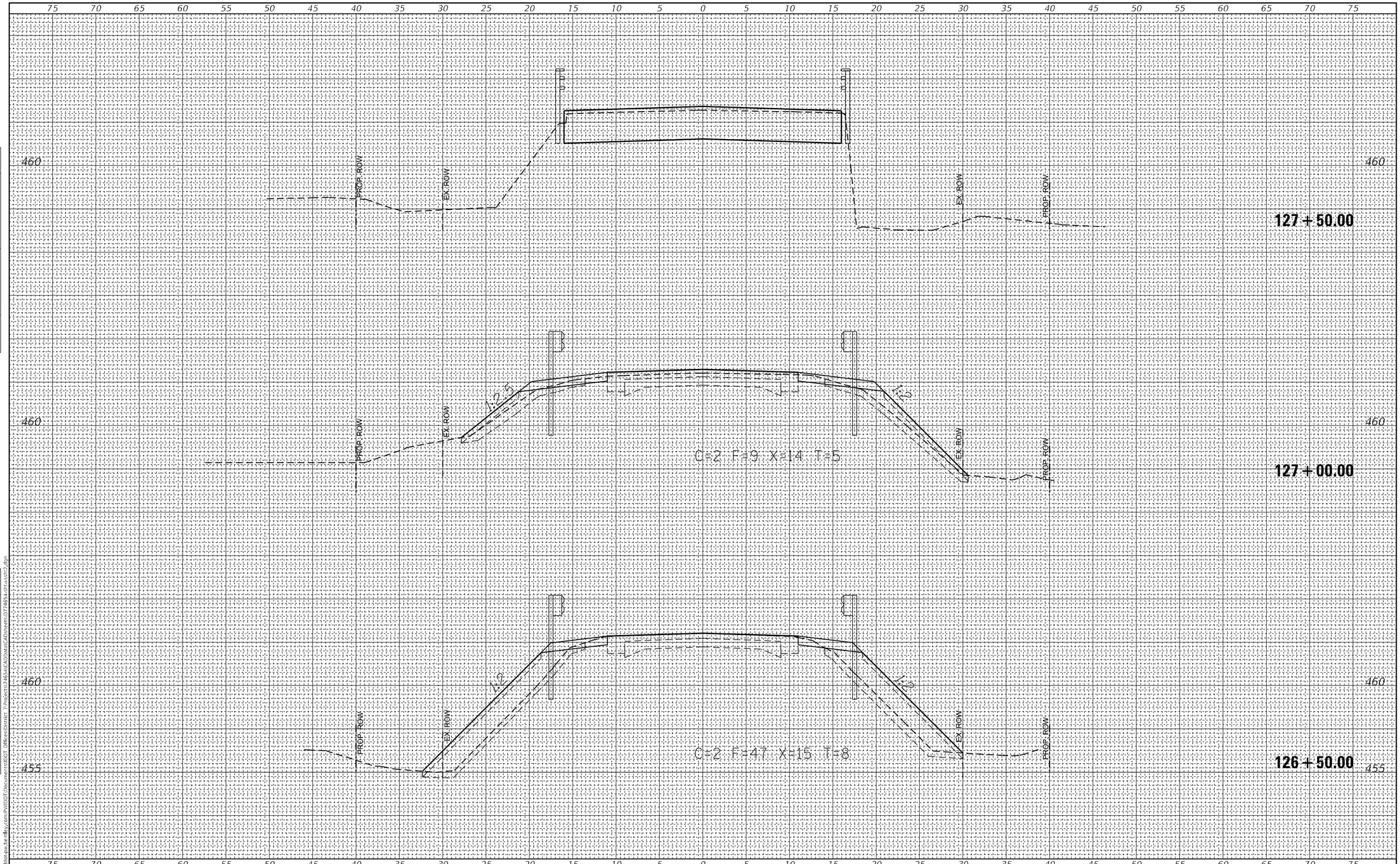

FINAL SURVEY		BY	DATE
	SURVEYED		
	PLOTTED		
NOTE BOOK	TEMPLATE		
	AREAS		
NO.	AREAS CHECKED		

ORIGINAL SURVEY		BY	DATE
	SURVEYED		
	PLOTTED		
NOTE BOOK	TEMPLATE		
	AREAS		
NO.	AREAS CHECKED		

MODEL: Default
FILE NAME: pw:\\ildot-pw.bentley.com:PWIDOT\Documents\IDOT Offices\District 7\Projects\74654\CAD\Data\CADsheets\D774654-sht-xssh-2.dgn

USER NAME = jessica.hille	DESIGNED -	REVISED -	
	DRAWN -	REVISED -	
PLOT SCALE = 10.0000 ' / in.	CHECKED -	REVISED -	
PLOT DATE = 1/29/2025	DATE -	REVISED -	

STATE OF ILLINOIS
DEPARTMENT OF TRANSPORTATION

ROADWAY CROSS SECTIONS

SCALE: | SHEET OF SHEETS | STA. TO STA.

F.A.S. RTE.	SECTION	COUNTY	TOTAL SHEETS	SHEET NO.
2704	(11BR-1)BR	CLAY	38	26

CONTRACT NO. 74654

ILLINOIS | FED. AID PROJECT

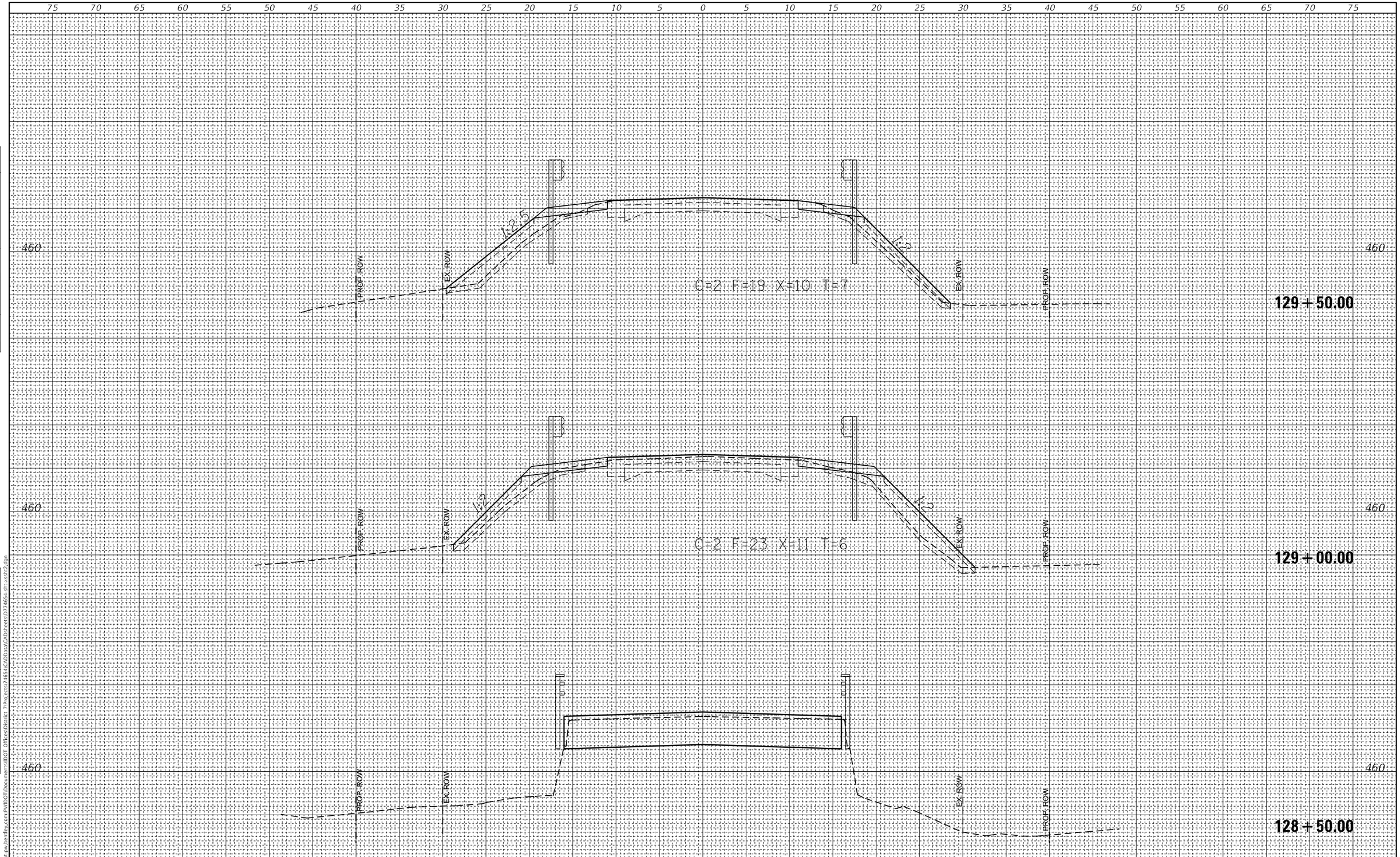

FINAL SURVEY		BY	DATE
	SURVEYED		
	PLOTTED		
NOTE BOOK	TEMPLATE		
	AREAS		
NO.	AREAS CHECKED		

ORIGINAL SURVEY		BY	DATE
	SURVEYED		
	PLOTTED		
NOTE BOOK	TEMPLATE		
	AREAS		
NO.	AREAS CHECKED		

MODEL: Default
FILE NAME: pw:\\ildot-pw.bentley.com:PWIDOT\Documents\IDOT Offices\District 7\Projects\74654\CAD\Data\CADsheets\074654-sht-xsth2.dgn

USER NAME = jessica.hille	DESIGNED -	REVISED -	
	DRAWN -	REVISED -	
PLOT SCALE = 10.0000 ' / in.	CHECKED -	REVISED -	
PLOT DATE = 1/29/2025	DATE -	REVISED -	

STATE OF ILLINOIS
DEPARTMENT OF TRANSPORTATION

ROADWAY CROSS SECTIONS

SCALE: | SHEET OF SHEETS | STA. TO STA.

F.A.S. RTE.	SECTION	COUNTY	TOTAL SHEETS	SHEET NO.
2704	(11BR-1)BR	CLAY	38	27

CONTRACT NO. 74654

ILLINOIS | FED. AID PROJECT

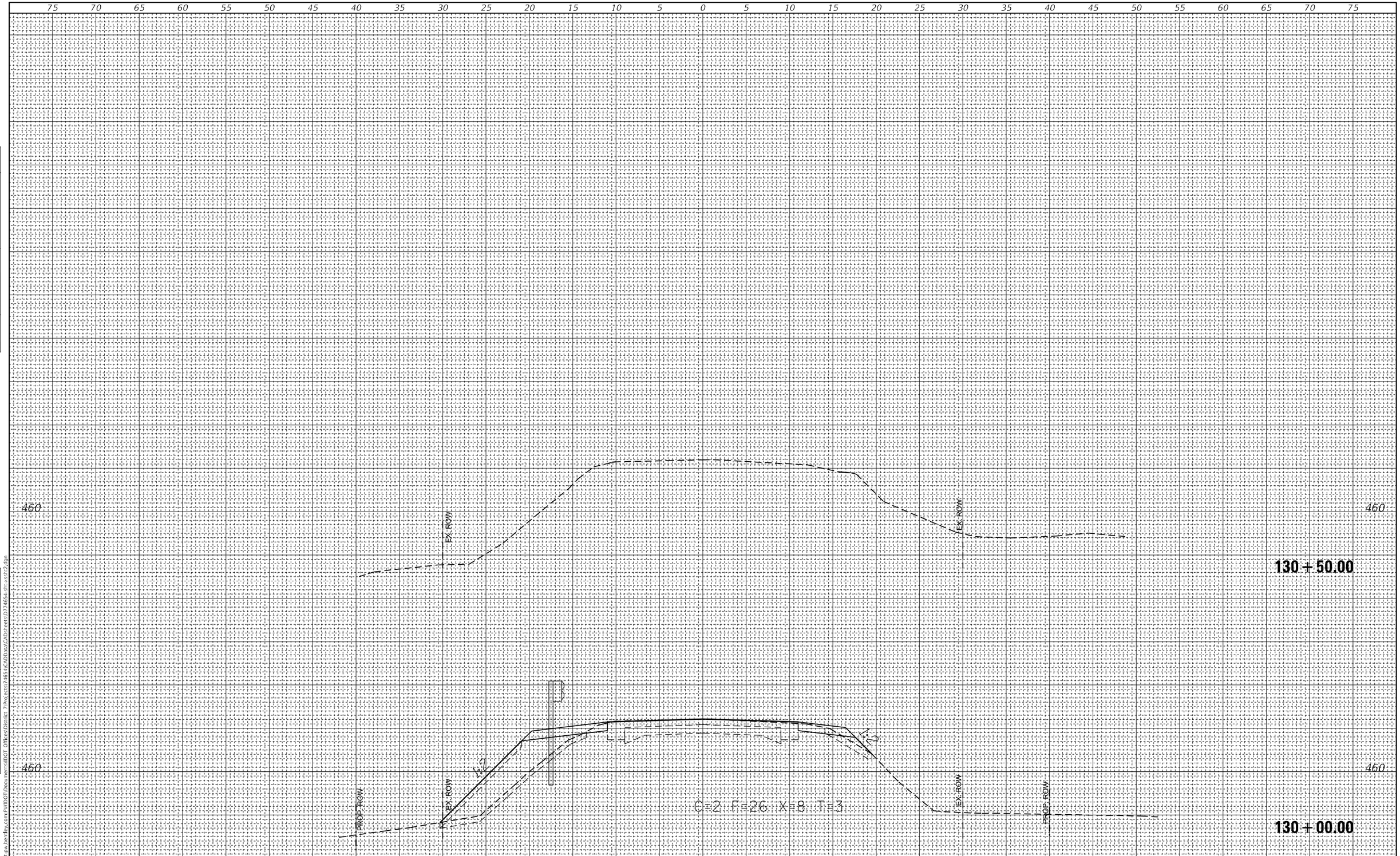

FINAL SURVEY		BY	DATE
	SURVEYED		
	PLOTTED		
NOTE BOOK	TEMPLATE		
	AREAS		
NO.	AREAS CHECKED		

ORIGINAL SURVEY		BY	DATE
	SURVEYED		
	PLOTTED		
NOTE BOOK	TEMPLATE		
	AREAS		
NO.	AREAS CHECKED		

MODEL: Default
FILE NAME: pw:\\ildot-pw.bentley.com:PWIDOT\Documents\IDOT Offices\District 7\Projects\74654\CAD\Data\CADsheets\074654-sht-xsth2.dgn

USER NAME = jessica.hille	DESIGNED -	REVISED -	
	DRAWN -	REVISED -	
PLOT SCALE = 10.0000 ' / in.	CHECKED -	REVISED -	
PLOT DATE = 1/29/2025	DATE -	REVISED -	

STATE OF ILLINOIS
DEPARTMENT OF TRANSPORTATION

ROADWAY CROSS SECTIONS

SCALE: | SHEET OF SHEETS | STA. TO STA.

F.A.S. RTE.	SECTION	COUNTY	TOTAL SHEETS	SHEET NO.
2704	(11BR-1)BR	CLAY	38	28

CONTRACT NO. 74654

ILLINOIS | FED. AID PROJECT

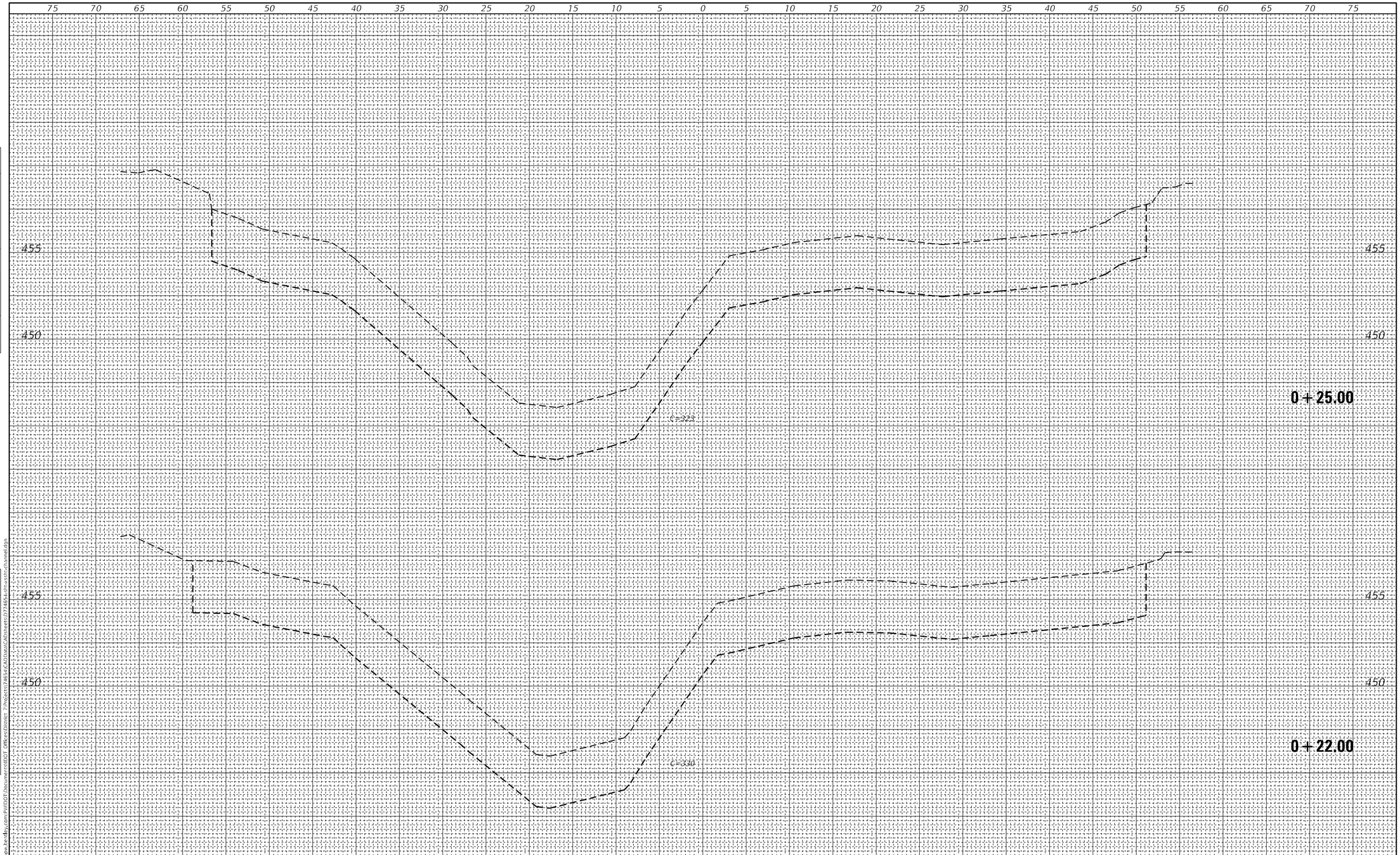

FINAL SURVEY		BY	DATE
NOTE BOOK	SURVEYED		
	PLOTTED		
	TEMPLATE		
	AREAS		
NO.	AREAS CHECKED		

ORIGINAL SURVEY		BY	DATE
NOTE BOOK	SURVEYED		
	PLOTTED		
	TEMPLATE		
	AREAS		
NO.	AREAS CHECKED		

MODEL: Default
FILE NAME: pw:\\ildot-pw.bentley.com:PWIDOT\Documents\IDOT Offices\District 7\Projects\74654\CAD\Data\CAD\sheets\0774654-sht-xsctn-channel.dgn

USER NAME = jessica.hille	DESIGNED -	REVISED -	
	DRAWN -	REVISED -	
PLOT SCALE = 10.0000 ' / in.	CHECKED -	REVISED -	
PLOT DATE = 1/29/2025	DATE -	REVISED -	

STATE OF ILLINOIS
DEPARTMENT OF TRANSPORTATION

CHANNEL EXCAVATION

SCALE: | SHEET OF SHEETS | STA. +22.00 TO STA. +25.00

F.A.S. RTE.	SECTION	COUNTY	TOTAL SHEETS	SHEET NO.
2704	(11BR-1)BR	CLAY	38	29

CONTRACT NO. 74654

ILLINOIS | FED. AID PROJECT

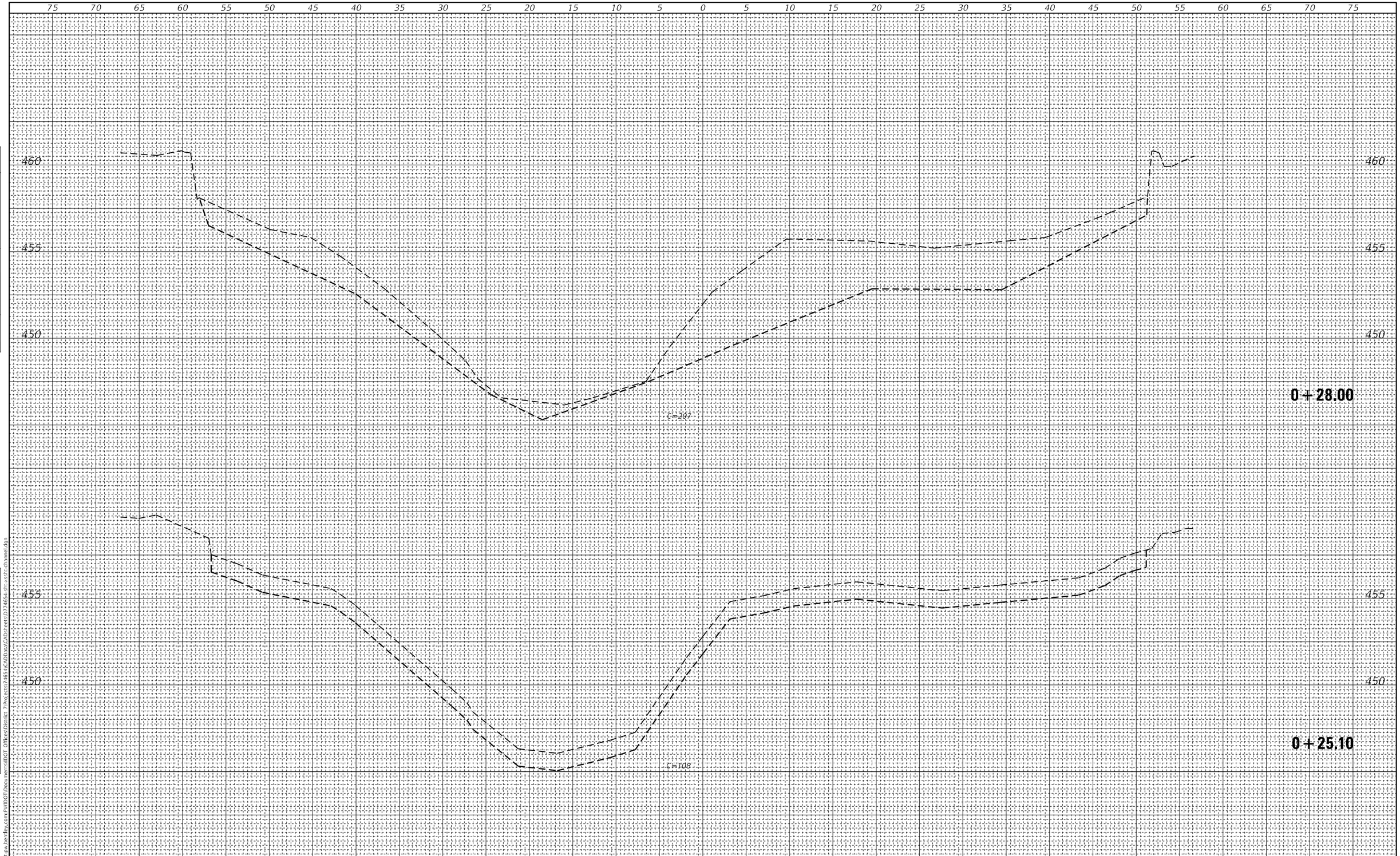

FINAL SURVEY	BY	DATE
SURVEYED		
PLOTTED		
TEMPLATE		
AREAS		
AREAS CHECKED		
NOTE BOOK NO.		

ORIGINAL SURVEY	BY	DATE
SURVEYED		
PLOTTED		
TEMPLATE		
AREAS		
AREAS CHECKED		
NOTE BOOK NO.		

MODEL: Default
FILE NAME: pw:\\ildot-pw.bentley.com:PWIDOT\Documents\IDOT Offices\District 7\Projects\74654\CAD\Data\CADsheets\0774654-sht-xsth-channel.dgn

USER NAME = jessica.hille	DESIGNED -	REVISED -
	DRAWN -	REVISED -
PLOT SCALE = 10.0000 ' / in.	CHECKED -	REVISED -
PLOT DATE = 1/29/2025	DATE -	REVISED -

STATE OF ILLINOIS
DEPARTMENT OF TRANSPORTATION

CHANNEL EXCAVATION

SCALE: | SHEET OF SHEETS | STA. +25.10 TO STA. +28.00

F.A.S. RTE.	SECTION	COUNTY	TOTAL SHEETS	SHEET NO.
2704	(11BR-1)BR	CLAY	38	30

CONTRACT NO. 74654

ILLINOIS | FED. AID PROJECT

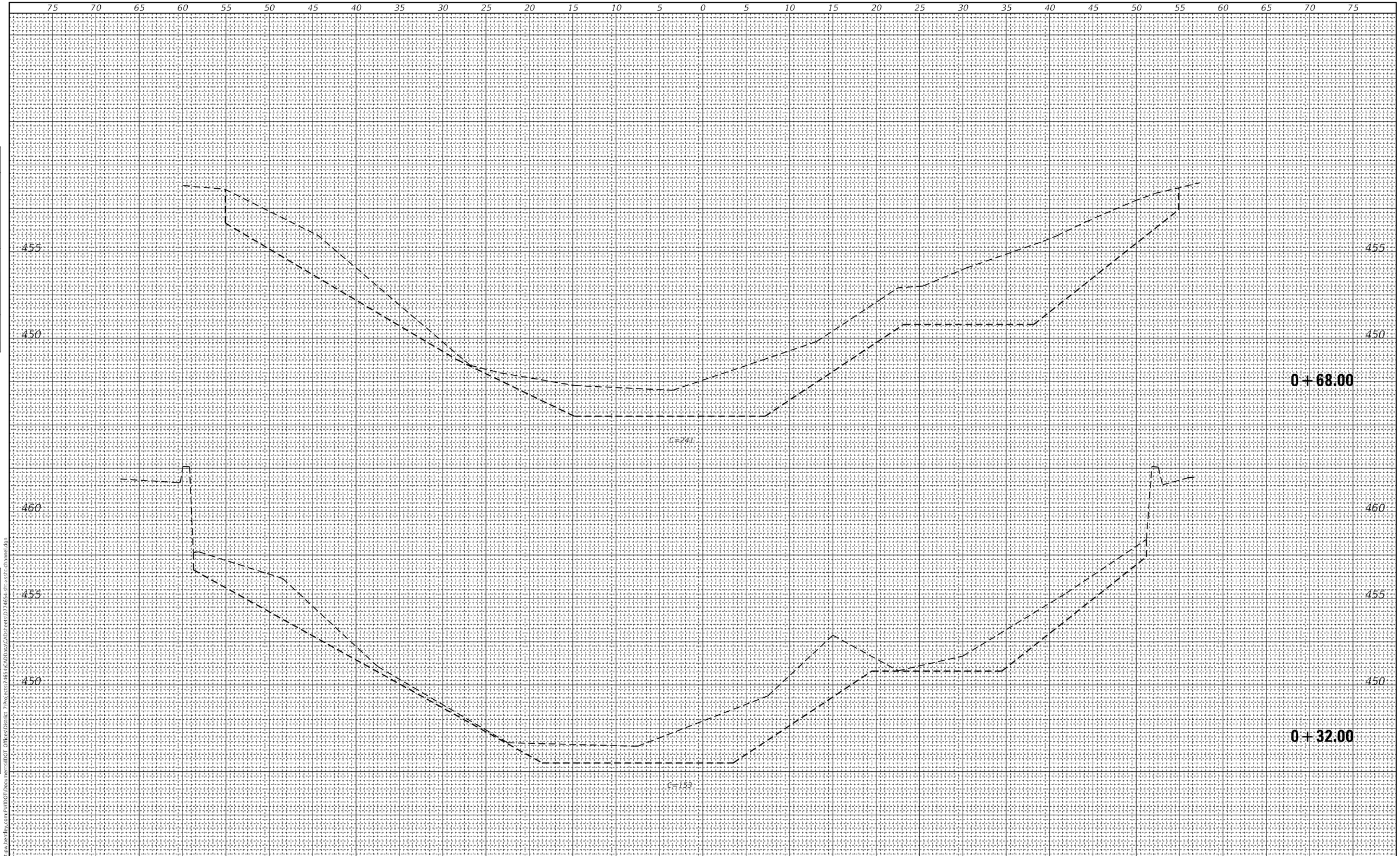

FINAL SURVEY	BY	DATE
SURVEYED		
PLOTTED		
TEMPLATE		
AREAS		
AREAS CHECKED		
NOTE BOOK		
NO.		

ORIGINAL SURVEY	BY	DATE
SURVEYED		
PLOTTED		
TEMPLATE		
AREAS		
AREAS CHECKED		
NOTE BOOK		
NO.		

MODEL: Default
FILE NAME: pw:\\ildot-pw.bentley.com:PWIDOT\Documents\IDOT Offices\District 7\Projects\74654\CAD\Data\CADsheets\0774654-sht-xsth-channel.dgn

USER NAME = jessica.hille	DESIGNED -	REVISED -	
	DRAWN -	REVISED -	
PLOT SCALE = 10.0000 ' / in.	CHECKED -	REVISED -	
PLOT DATE = 1/29/2025	DATE -	REVISED -	

STATE OF ILLINOIS
DEPARTMENT OF TRANSPORTATION

CHANNEL EXCAVATION

SCALE: | SHEET OF SHEETS | STA. +32.00 TO STA. +68.00

F.A.S. RTE.	SECTION	COUNTY	TOTAL SHEETS	SHEET NO.
2704	(11BR-1)BR	CLAY	38	31

CONTRACT NO. 74654

ILLINOIS | FED. AID PROJECT

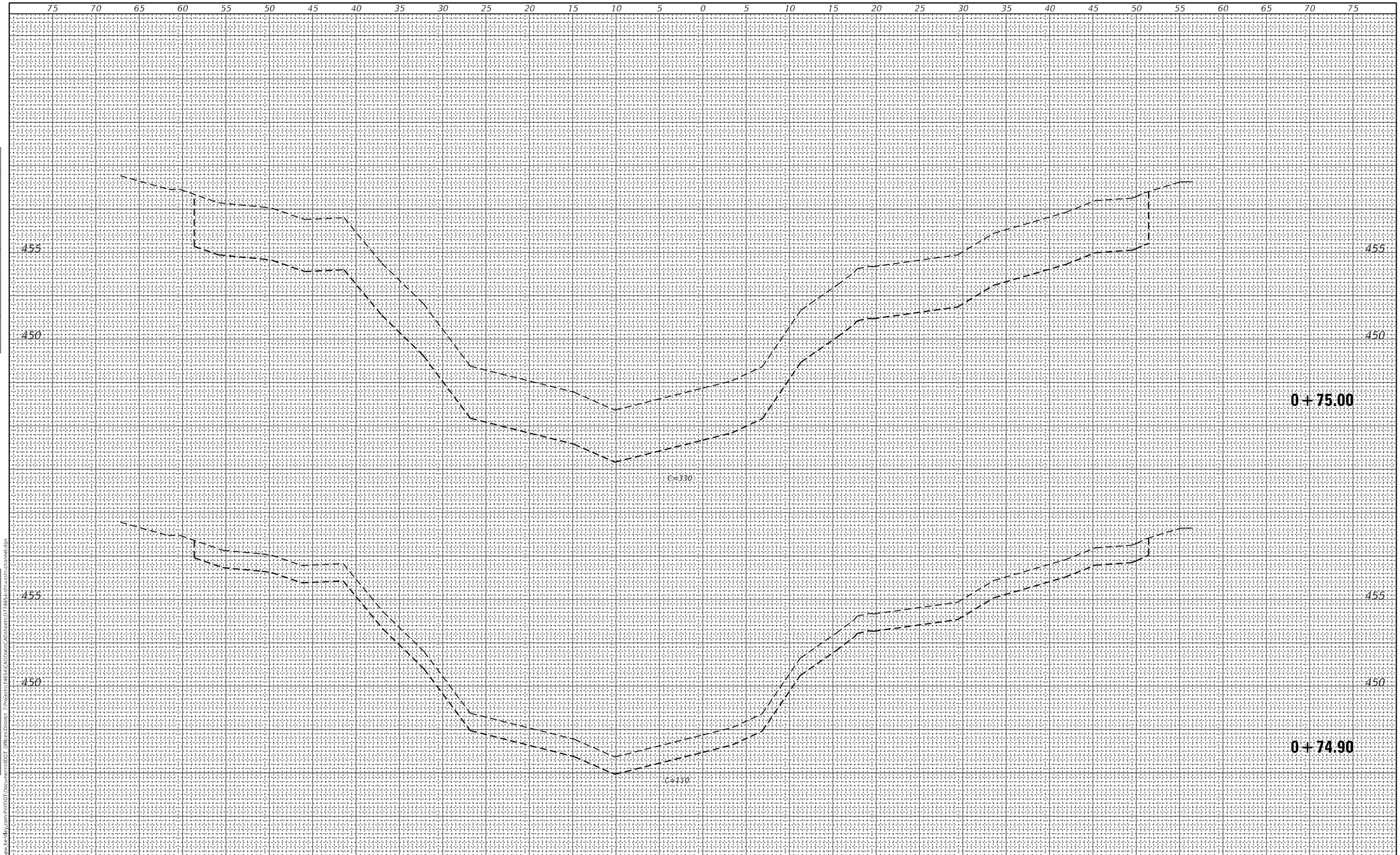

FINAL SURVEY	BY	DATE
SURVEYED		
PLOTTED		
TEMPLATE		
AREAS		
AREAS CHECKED		
NOTE BOOK NO.		

ORIGINAL SURVEY	BY	DATE
SURVEYED		
PLOTTED		
TEMPLATE		
AREAS		
AREAS CHECKED		
NOTE BOOK NO.		

MODEL: Default
FILE NAME: pw:\\ildot-pw.bentley.com:PWIDOT\Documents\IDOT Offices\District 7\Projects\74654\CADData\CADsheets\D774654-sht-xsts-channel.dgn

USER NAME = jessica.hille	DESIGNED -	REVISED -	
	DRAWN -	REVISED -	
PLOT SCALE = 10.0000 ' / in.	CHECKED -	REVISED -	
PLOT DATE = 1/29/2025	DATE -	REVISED -	

STATE OF ILLINOIS
DEPARTMENT OF TRANSPORTATION

CHANNEL EXCAVATION

SCALE: | SHEET OF SHEETS | STA. +74.90 TO STA. +75.00

F.A.S. RTE.	SECTION	COUNTY	TOTAL SHEETS	SHEET NO.
2704	(11BR-1)BR	CLAY	38	32

CONTRACT NO. 74654

ILLINOIS | FED. AID PROJECT

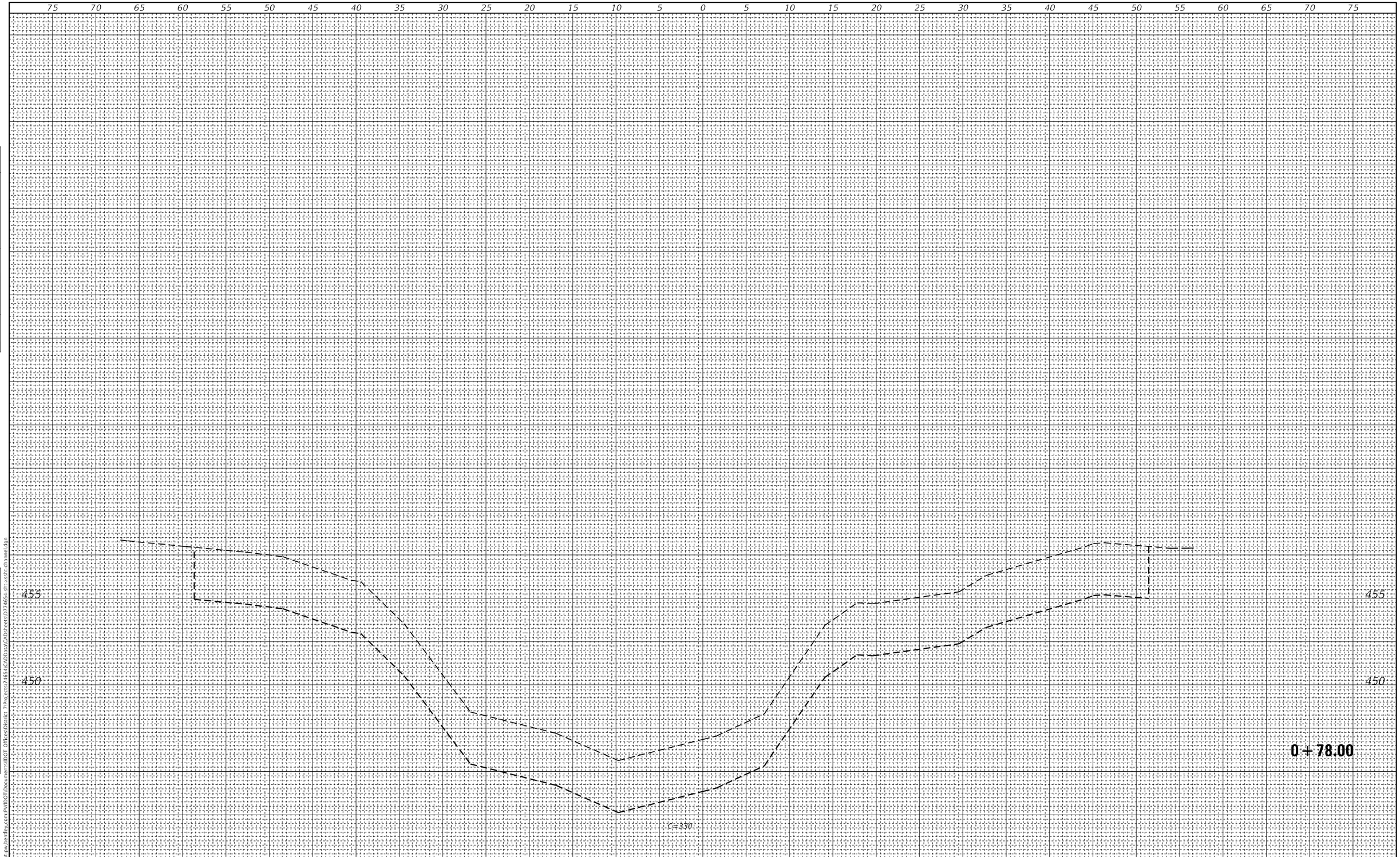

FINAL SURVEY	BY	DATE
SURVEYED		
PLOTTED		
TEMPLATE		
AREAS		
AREAS CHECKED		
NOTE BOOK NO.		

ORIGINAL SURVEY	BY	DATE
SURVEYED		
PLOTTED		
TEMPLATE		
AREAS		
AREAS CHECKED		
NOTE BOOK NO.		

MODEL: Default
FILE NAME: pw:\\ildot-pw.bentley.com:PWIDOT\Documents\IDOT Offices\District 7\Projects\74654\CAD\Data\CADsheets\0774654-sht-xsth-channel.dgn

USER NAME = jessica.hille	DESIGNED -	REVISED -	
	DRAWN -	REVISED -	
PLOT SCALE = 10.0000 ' / in.	CHECKED -	REVISED -	
PLOT DATE = 1/29/2025	DATE -	REVISED -	

STATE OF ILLINOIS
DEPARTMENT OF TRANSPORTATION

CHANNEL EXCAVATION

SCALE: | SHEET OF SHEETS | STA. +78.00 TO STA. +78.00

F.A.S. RTE.	SECTION	COUNTY	TOTAL SHEETS	SHEET NO.
2704	(11BR-1)BR	CLAY	38	33

CONTRACT NO. 74654

ILLINOIS | FED. AID PROJECT

TWO LANE/TWO WAY

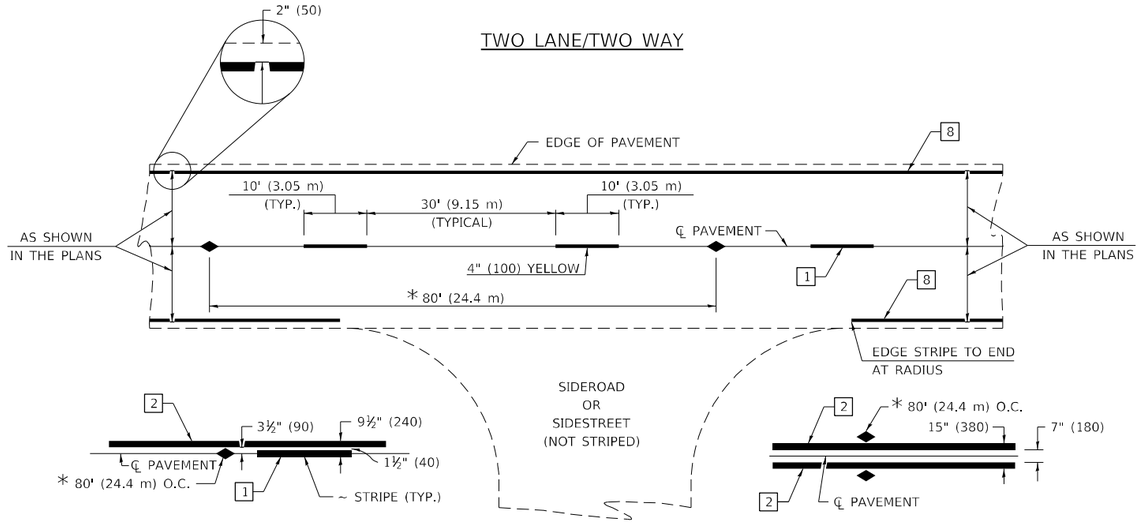

SINGLE NO PASSING

DOUBLE NO PASSING

* REDUCE TO 40' (12.2 m) O.C. ON CURVES WITH POSTED OR ADVISORY SPEEDS OF 45 mph (70 km/h) OR LESS.

PAVEMENT MARKING LEGEND

1. 4" (100) SKIP-DASH (YELLOW)
2. 4" (100) SOLID (YELLOW)
3. 12" (300) DIAGONAL (YELLOW)
4. 4" (100) DOUBLE YELLOW (NARROW)
5. 12" (300) SOLID WHITE
6. RESERVED
7. 6" (150) SKIP-DASH (WHITE)
8. 4" (100) SOLID (WHITE)
9. 12" (300) DIAGONAL (WHITE)
10. 6" (150) SOLID (WHITE)
11. 24" (600) STOP BAR (WHITE)
12. 8" (200) SOLID (WHITE)
13. 4" (100) PARKING WHITE

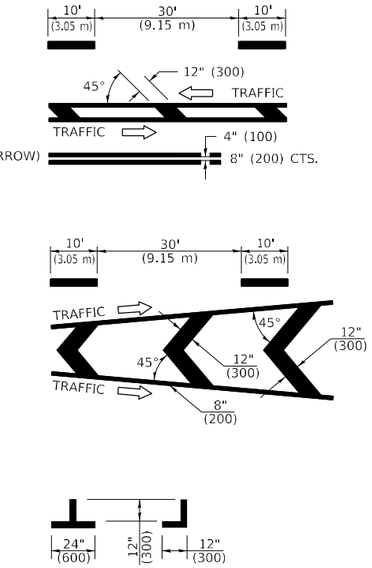

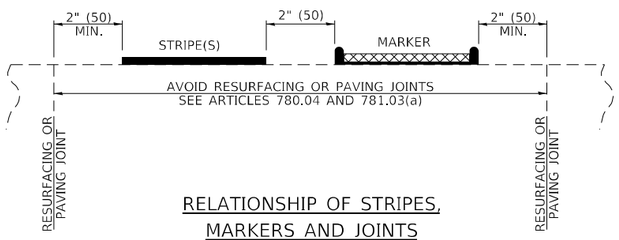

RELATIONSHIP OF STRIPES, MARKERS AND JOINTS

TYPICAL PAVEMENT MARKERS LEGEND

- ◆ TWO-WAY AMBER MARKER
- ▶ ONE-WAY AMBER MARKER
- ▷ ONE-WAY CRYSTAL MARKER

RAISED REFLECTIVE PAVEMENT MARKERS

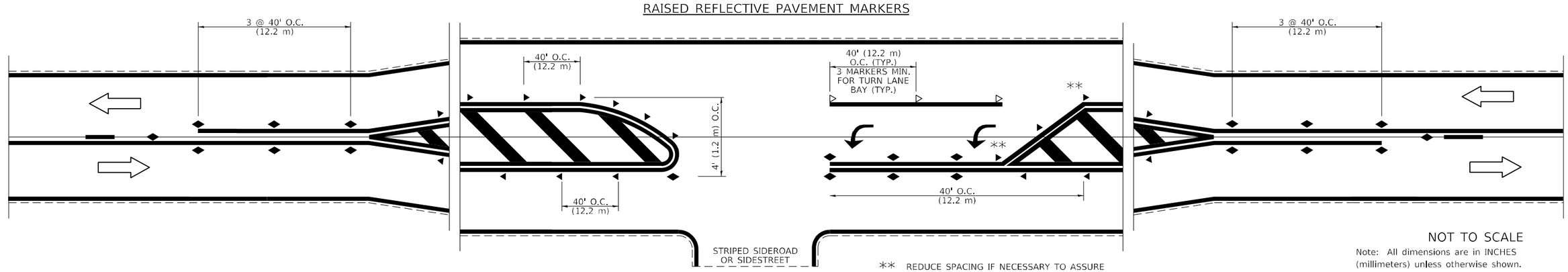

** REDUCE SPACING IF NECESSARY TO ASSURE MARKERS AT CORNER POINTS.

NOT TO SCALE

Note: All dimensions are in INCHES (millimeters) unless otherwise shown.

DISTRICT 7 DETAIL NO. 78000001

F.A.S. RTE.	SECTION	COUNTY	TOTAL SHEETS	SHEET NO.
2704	(11BR-1)BR	CLAY	38	34
		CONTRACT NO. 74654		
		ILLINOIS	FED. AID PROJECT	

USER NAME = jessica.hille	DESIGNED -	REVISED -
	DRAWN -	REVISED -
PLOT SCALE = 100.0000 ' / in.	CHECKED -	REVISED -
PLOT DATE = 1/29/2025	DATE -	REVISED -

STATE OF ILLINOIS
DEPARTMENT OF TRANSPORTATION

PAVEMENT MARKING AND RAISED REFLECTIVE PAVEMENT MARKERS
(RURAL AND URBAN APPLICATIONS

SCALE: SHEET 1 OF 4 SHEETS STA. TO STA.

MODEL: Default
FILE NAME: pw:\\ildot-pw.bentley.com:PWIDOT\Documents\IDOT Offices\District 7\Projects\74654\CADData\CADsheets\077465-sht-detail.dgn

URBAN LEFT TURN

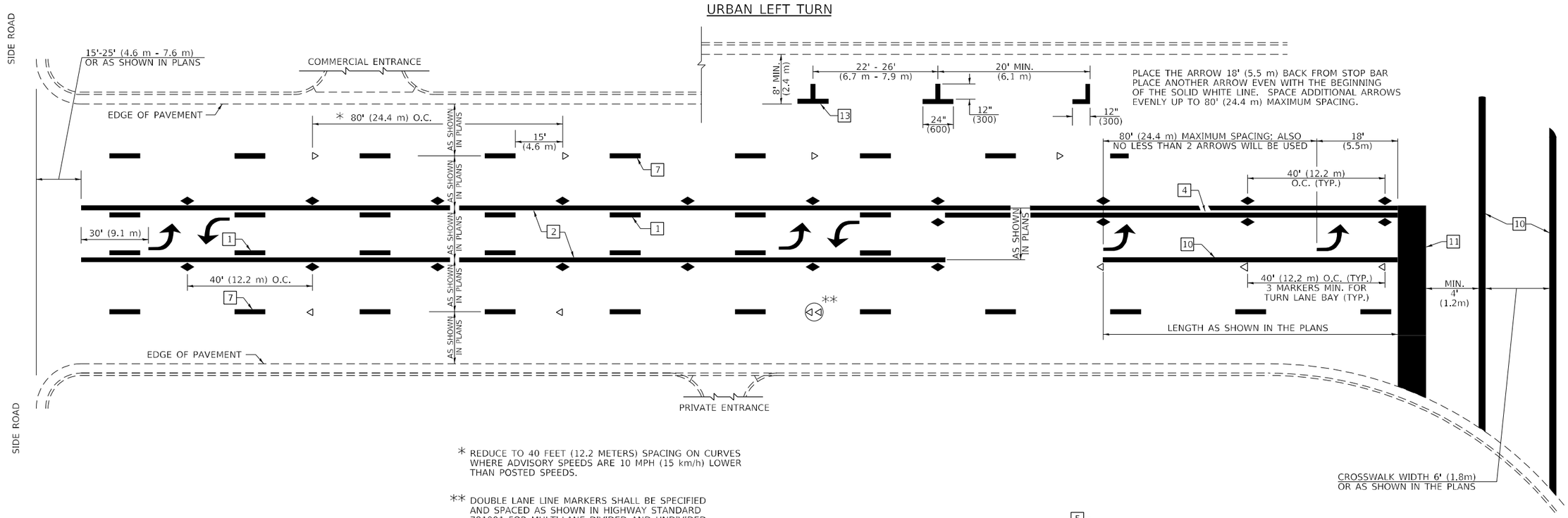

* REDUCE TO 40 FEET (12.2 METERS) SPACING ON CURVES WHERE ADVISORY SPEEDS ARE 10 MPH (15 km/h) LOWER THAN POSTED SPEEDS.

** DOUBLE LANE LINE MARKERS SHALL BE SPECIFIED AND SPACED AS SHOWN IN HIGHWAY STANDARD 781001 FOR MULTI-LANE DIVIDED AND UNDIVIDED HIGHWAYS.

PAVEMENT MARKING LEGEND

1. 4" (100) SKIP-DASH (YELLOW)
2. 4" (100) SOLID (YELLOW)
3. 12" (300) DIAGONAL (YELLOW)
4. 4" (100) DOUBLE YELLOW (NARROW)
5. 12" (300) SOLID WHITE
6. RESERVED
7. 6" (150) SKIP-DASH (WHITE)
8. 4" (100) SOLID (WHITE)
9. 12" (300) DIAGONAL (WHITE)
10. 6" (150) SOLID (WHITE)
11. 24" (600) STOP BAR (WHITE)
12. 8" (200) SOLID (WHITE)
13. 4" (100) PARKING WHITE

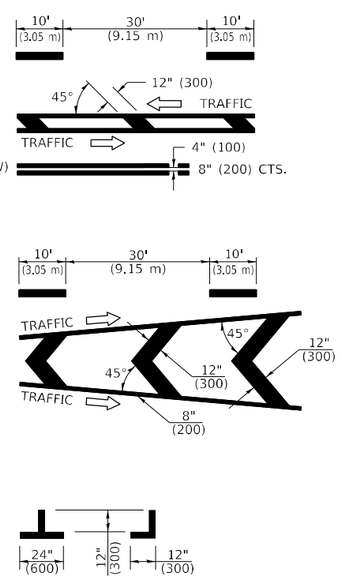

GENERAL NOTES

1. TURN ARROW PAIRS SHALL BE PLACED AT 250'(75 m) INTERVALS AND SHALL BE EVENLY SPACED BETWEEN BOTH ENDS OF THE BIDIRECTIONAL LEFT TURN LANE. USE A MINIMUM OF TWO PAIRS PER BLOCK.
2. THE SOLID YELLOW PAVEMENT MARKINGS 2 SHOULD GENERALLY START OR END NEAR THE RADIUS POINT OF EACH STREET RETURN EXCEPT WHERE ONE OR BOTH ENDS WOULD INCLUDE STOP BARS.
3. THE SKIP-DASH PAVEMENT MARKINGS 1 OR 7 SHOULD BE CENTERED BETWEEN BOTH ENDS OF EACH CITY BLOCK AND SHALL BE PLACED SO THEY LINE UP ACROSS FROM EACH OTHER.
4. USE LARGE ARROW SIZE FOR BOTH RURAL AND URBAN LOCATIONS. (SEE LAST PAGE OF SECTION 780x FOR SYMBOLS TABLE)
5. LANE LINE EXTENSIONS SHALL BE THE SAME COLOR AND WIDTH AS THE LANE LINE BEING EXTENDED.

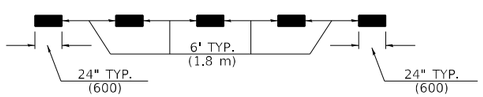

LANE LINE EXTENSIONS

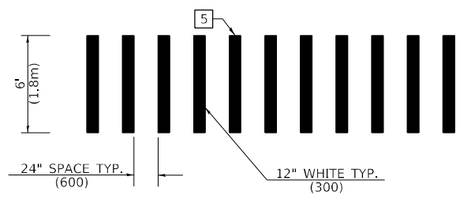

CROSSWALK DETAIL
(DECATUR CITY LIMITS ONLY)

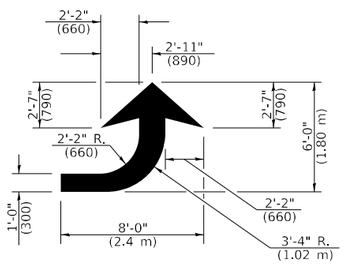

LEFT ARROW
REVERSE FOR RIGHT ARROW
AREA = 15.6 SQ. FT. (1.47 m^2)
(WHITE)

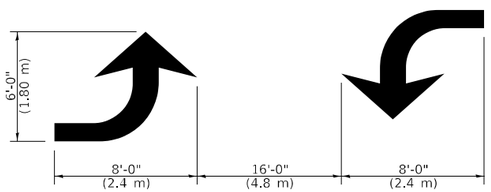

TYPICAL DOUBLE
TURN ARROWS (WHITE)

NOT TO SCALE

Note: All dimensions are in INCHES (millimeters) unless otherwise shown.

DISTRICT 7 DETAIL NO. 78000001

USER NAME = jessica.hille	DESIGNED -	REVISED -	
	DRAWN -	REVISED -	
PLOT SCALE = 100.0000 ' / in.	CHECKED -	REVISED -	
PLOT DATE = 1/29/2025	DATE -	REVISED -	

STATE OF ILLINOIS
DEPARTMENT OF TRANSPORTATION

PAVEMENT MARKING AND RAISED REFLECTIVE PAVEMENT MARKERS (RURAL AND URBAN APPLICATIONS

SCALE: SHEET 2 OF 4 SHEETS STA. TO STA.

F.A.S. RTE.	SECTION	COUNTY	TOTAL SHEETS	SHEET NO.
2704	(11BR-1)BR	CLAY	38	35

CONTRACT NO. 74654

ILLINOIS FED. AID PROJECT

MODEL: Default
FILE NAME: pw:\\ildot-pw.bentley.com:PWIDOT\Documents\IDOT Offices\District 7\Projects\74654\CADData\CADsheets\0774654-sht-details.dgn

ISLAND

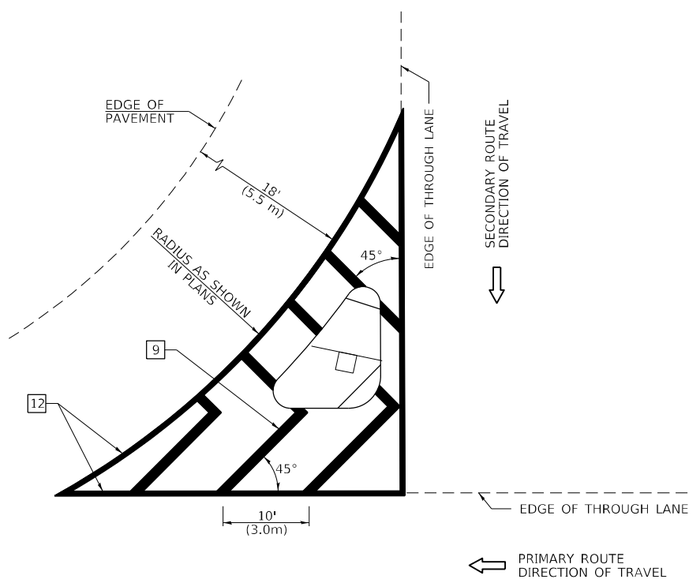

GENERAL NOTES

1. RAISED AND CORRUGATED MEDIANS SHALL BE OUTLINED WITH [2] IF PRESENT.
2. SOME OF THE INFORMATION INCLUDED WITH THIS DETAIL MAY NOT BE APPLICABLE TO THIS IMPROVEMENT.
3. PAVEMENT MARKINGS ARE TO BE EXTENDED THROUGH OMISSIONS WHEN APPLICABLE.
4. FINAL PAVEMENT MARKINGS SHALL BE IN PLACE PRIOR TO PLACING ANY RAISED REFLECTIVE PAVEMENT MARKERS.
5. THE FOLLOWING CRITERIA SHALL BE USED FOR SELECTING THE DIAGONAL PAVEMENT MARKING SPACING:

<30 MPH	(<50 km/h)	15' (4.5 m)
30-45 MPH	(50-75 km/h	20' (6.0 m)
>45 MPH	(>75 km/h	30' (9.0 m)

PAVEMENT MARKING LEGEND

1	4" (100) SKIP-DASH (YELLOW)
2	4" (100) SOLID (YELLOW)
3	12" (300) DIAGONAL (YELLOW)
4	4" (100) DOUBLE YELLOW (NARROW)
5	12" (300) SOLID WHITE
6	RESERVED
7	6" (150) SKIP-DASH (WHITE)
8	4" (100) SOLID (WHITE)
9	12" (300) DIAGONAL (WHITE)
10	6" (150) SOLID (WHITE)
11	24" (600) STOP BAR (WHITE)
12	8" (200) SOLID (WHITE)
13	4" (100) PARKING WHITE

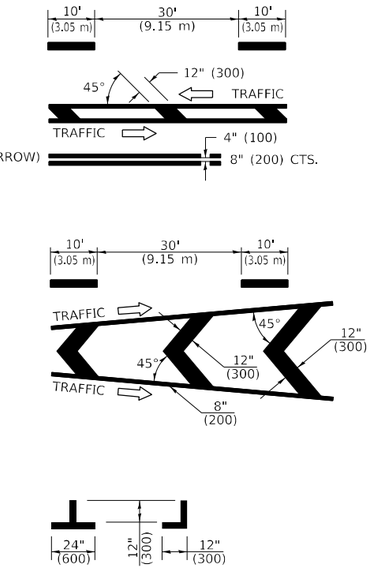

RURAL LEFT TURN STRIPING

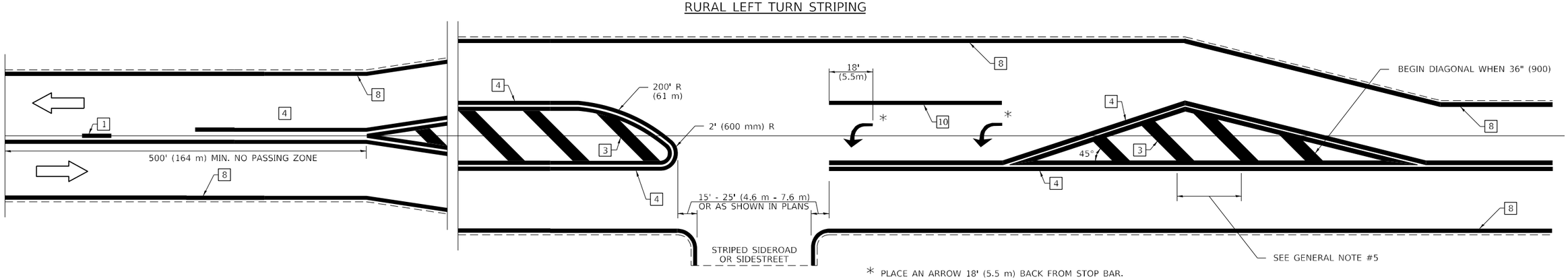

* PLACE AN ARROW 18' (5.5 m) BACK FROM STOP BAR. PLACE ANOTHER ARROW EVEN WITH THE BEGINNING OF THE SOLID WHITE LINE. SPACE ADDITIONAL ARROWS EVENLY UP TO 80' (24.4 m) MAXIMUM SPACING. USE MINIMUM OF 2 ARROWS.

NOT TO SCALE

Note: All dimensions are in INCHES (millimeters) unless otherwise shown.

DISTRICT 7 DETAIL NO. 78000001

USER NAME = jessica.hille	DESIGNED -	REVISED -	
	DRAWN -	REVISED -	
PLOT SCALE = 100.0000 ' / in.	CHECKED -	REVISED -	
PLOT DATE = 1/29/2025	DATE -	REVISED -	

STATE OF ILLINOIS
DEPARTMENT OF TRANSPORTATION

PAVEMENT MARKING AND RAISED REFLECTIVE PAVEMENT MARKERS (RURAL AND URBAN APPLICATIONS

SCALE: | SHEET 3 OF 4 SHEETS | STA. TO STA.

F.A.S. RTE.	SECTION	COUNTY	TOTAL SHEETS	SHEET NO.
2704	(11BR-1)BR	CLAY	38	36

CONTRACT NO. 74654

ILLINOIS | FED. AID PROJECT

MODEL: Default
FILE NAME: pw:\\ildot-pw.bentley.com:PWIDOT\Documents\IDOT Offices\District 7\Projects\74654\CAD\Dsn\CAD\sheets\0774654-sht-detail.dgn

PAVEMENT MARKINGS AT RAILROAD-HIGHWAY GRADE CROSSING

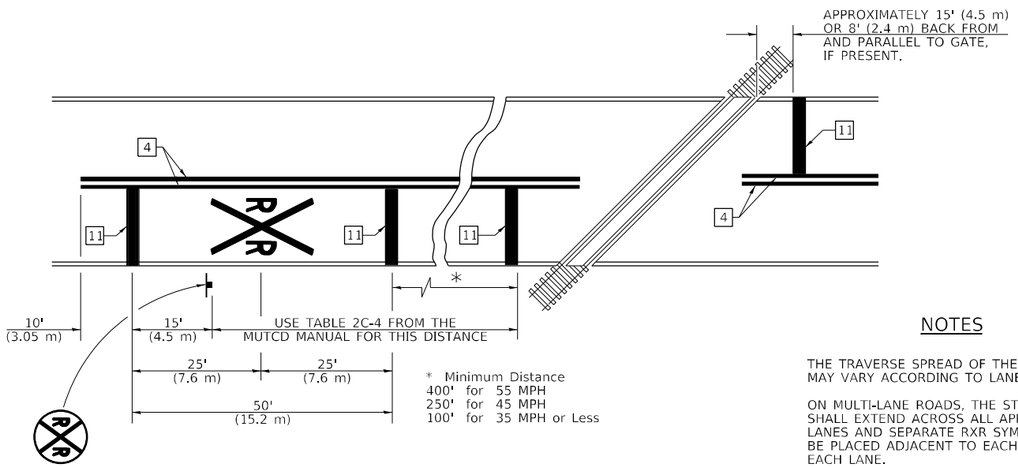

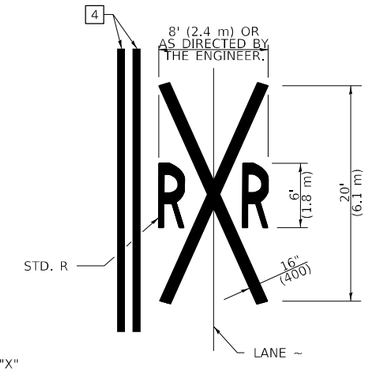

NOTES

THE TRAVERSE SPREAD OF THE "X" MAY VARY ACCORDING TO LANE WIDTH.

ON MULTI-LANE ROADS, THE STOP LINES SHALL EXTEND ACROSS ALL APPROACH LANES AND SEPARATE RXR SYMBOLS SHALL BE PLACED ADJACENT TO EACH OTHER IN EACH LANE.

WHEN THE PAVEMENT MARKING SYMBOL IS USED, A PORTION OF THE SYMBOL SHOULD BE LOCATED DIRECTLY ADJACENT TO THE ADVANCE WARNING SIGN (W10-1) AS PLACED BY TABLE II-1, CONDITION B OF THE MUTCD.

PAVEMENT MARKING LEGEND

1	4" (100) SKIP-DASH (YELLOW)
2	4" (100) SOLID (YELLOW)
3	12" (300) DIAGONAL (YELLOW)
4	4" (100) DOUBLE YELLOW (NARROW)
5	12" (300) SOLID WHITE
6	RESERVED
7	6" (150) SKIP-DASH (WHITE)
8	4" (100) SOLID (WHITE)
9	12" (300) DIAGONAL (WHITE)
10	6" (150) SOLID (WHITE)
11	24" (600) STOP BAR (WHITE)
12	8" (200) SOLID (WHITE)
13	4" (100) PARKING WHITE

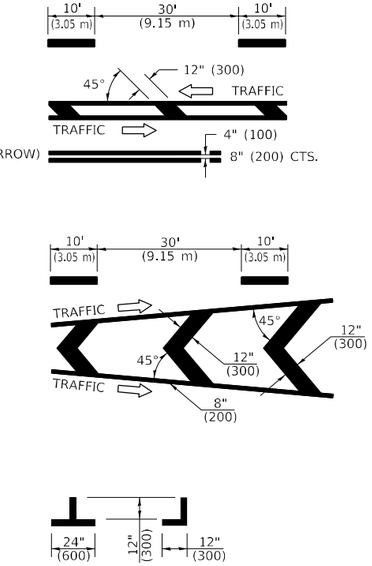

RAILROAD CROSSING WITH INTERCONNECT ONLY

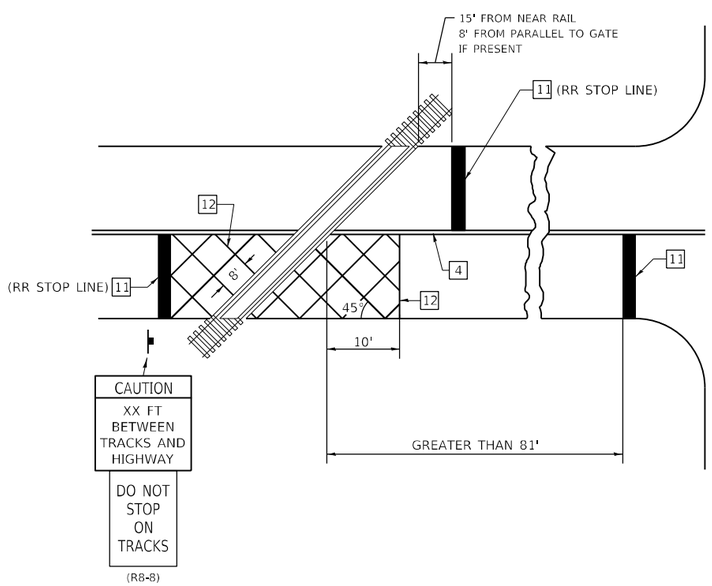

RAILROAD CROSSING WITH INTERCONNECT AND PRE-SIGNALS

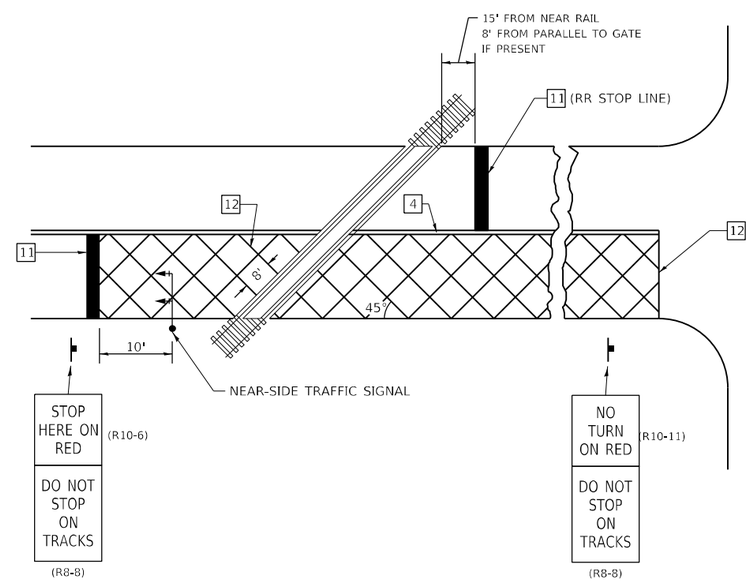

SUPPLEMENTAL PAVEMENT MARKING TREATMENT FOR RAILROAD-HIGHWAY GRADE CROSSING

GENERAL NOTES

1. SUPPLEMENTAL PAVEMENT MARKINGS TO BE INSTALLED ONLY ON APPROACHES TO INTERSECTIONS CONTROLLED BY TRAFFIC SIGNALS WHICH ARE INTERCONNECTED WITH THE RAILROAD WARNING SIGNALS.
2. EXTEND PAVEMENT MARKINGS TO THE INTERSECTION ONLY WHERE NEAR-SIDE TRAFFIC SIGNALS ARE USED.

NOT TO SCALE

Note: All dimensions are in INCHES (millimeters) unless otherwise shown.

DISTRICT 7 DETAIL NO. 78000001

USER NAME = jessica.hille	DESIGNED -	REVISED -	
	DRAWN -	REVISED -	
PLOT SCALE = 100.0000 ' / in.	CHECKED -	REVISED -	
PLOT DATE = 1/29/2025	DATE -	REVISED -	

STATE OF ILLINOIS
DEPARTMENT OF TRANSPORTATION

PAVEMENT MARKING AND RAISED REFLECTIVE PAVEMENT MARKERS (RURAL AND URBAN APPLICATIONS

SCALE: | SHEET 4 OF 4 SHEETS | STA. | TO STA.

F.A.S. RTE.	SECTION	COUNTY	TOTAL SHEETS	SHEET NO.
2704	(11BR-1)BR	CLAY	38	37

CONTRACT NO. 74654

ILLINOIS | FED. AID PROJECT

MODEL: Default
FILE NAME: pw:\\ildot-pw.bentley.com:PWIDOT\Documents\IDOT Offices\District 7\Projects\74654\CAD\Dsn\CAD\sheets\0774654-sht-detail.dgn

T.3N.–R.6E., 3rd P.M., HARTER TWP.

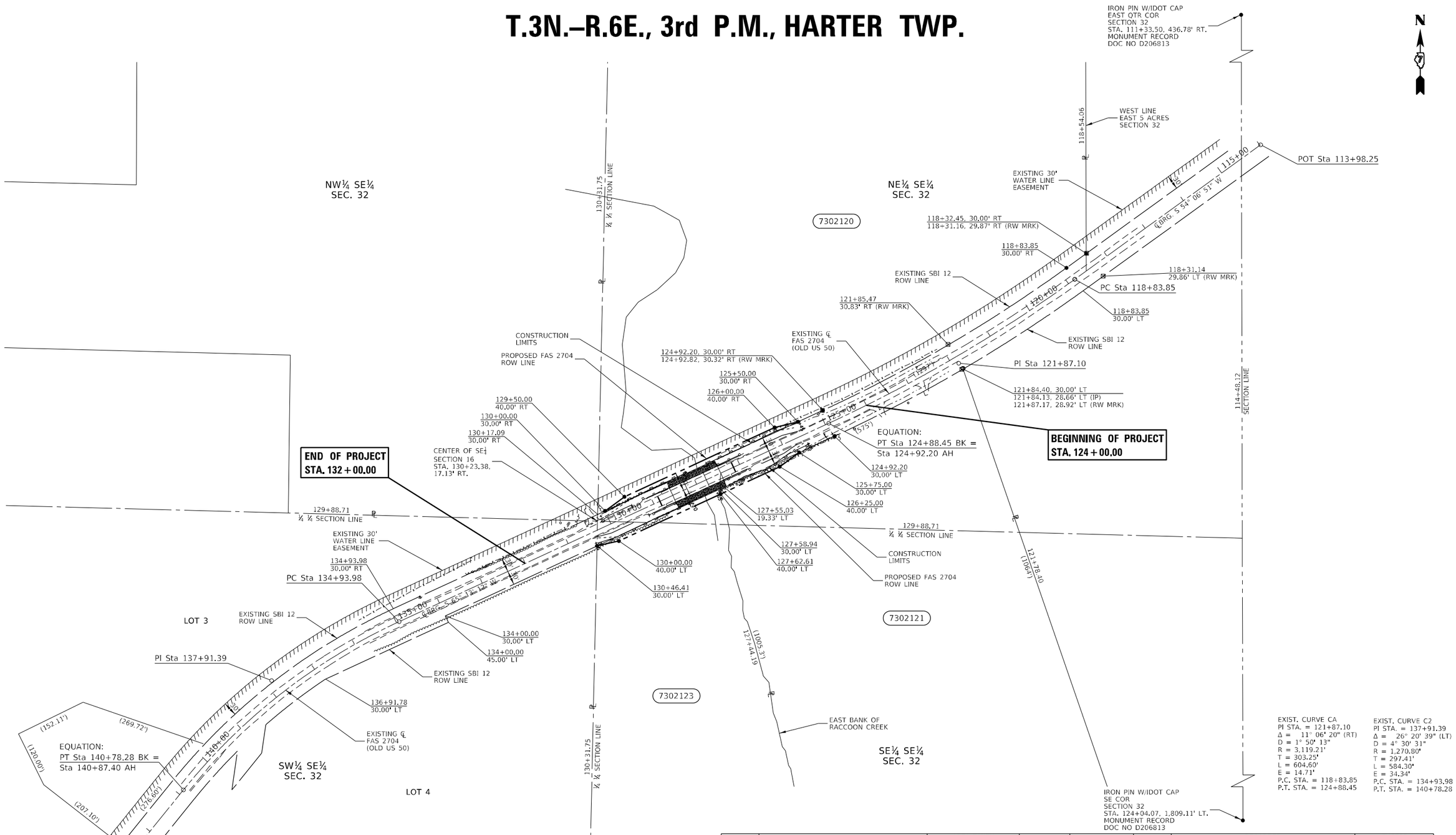

EXIST. CURVE CA
PI STA. = 121+87.10
Δ = 11° 06' 20" (RT)
D = 1° 50' 13"
R = 3,119.21'
T = 303.25'
L = 604.60'
E = 14.71'
P.C. STA. = 118+83.85
P.T. STA. = 124+88.45

EXIST. CURVE C2
PI STA. = 137+91.39
Δ = 26° 20' 39" (LT)
D = 4° 30' 31"
R = 1,270.80'
T = 297.41'
L = 584.30'
E = 34.34'
P.C. STA. = 134+93.98
P.T. STA. = 140+78.28

NOTE:
BEARINGS ARE REFERENCED TO THE ILLINOIS STATE PLANE COORDINATE SYSTEM EAST ZONE DATUM OF 1983(11)

TEMPORARY EASEMENTS NEEDED FOR A WORK AREA

● - SET IRON PIN
✖ - SET MAG NAIL
○ - EXISTING IRON PIN
⌘ - EXISTING NAIL/DRILL HOLE
× - EXISTING CHISELED "X"
⊗ - EXISTING ALUMINUM DISK
△ - EXISTING STONE
⊠ - EXISTING ROW MARKER
(R) - RECORDED DISTANCE

PARCEL	OWNER	AREA TAKEN		EASEMENT	REM. AREA	INST	RECORDED				EXCESS	
		ADD	EXIST				MICRO FILM NO.	DATE	BOOK	PAGE	AREA	SOLD
7302120	GLEN F. & JACQUELINE A. LUEKING, TRUSTEES	0.092 AC	0.800 AC		24.618 AC							
7302121	BRUCE HORSLEY & EDIE HORSLEY	0.037 AC			14.238 AC							
7302123	ADAM I. & JAMIE N. CARTRIGHT AND JOHN L. CARTRIGHT	0.060 AC	0.198 AC		9.263 AC							

MODEL: Sheet 2
FILE NAME: pw:\\ildot-pw.bentley.com:PWIDOT\Documents\IDOT Offices\District 7\Projects\74654\CADData\CADsheets\0774654-sht-ROWplan.dgn

USER NAME = jessica.hille	DESIGNED - JMD	REVISED - 09/27/2023	
	DRAWN - JMD	REVISED -	
PLOT SCALE = 200.0000 ' / in.	CHECKED - RDE	REVISED -	
PLOT DATE = 1/29/2025	DATE - 03/08/2023	REVISED -	

STATE OF ILLINOIS
DEPARTMENT OF TRANSPORTATION

RIGHT OF WAY PLANS

PROJECT TJQ5(383) | JOB NO. R-97-002-23
SCALE: 1" = 100' | SHEET 2 OF 2 SHEETS | STA. 114+00 TO 142+00

F.A.S. RTE.	SECTION	COUNTY	TOTAL SHEETS	SHEET NO.
2704	(11BR-1)BR	CLAY	38	38

CONTRACT NO. 74654

FED. ROAD DIST. NO. | ILLINOIS | FED. AID PROJECT TJQ5(383)