09-19-2025 LETTING ITEM 072

F.A.P. RTE.	SECTION	COUNTY	TOTAL SHEETS	SHEET NO.
2937	116B-1	PULASKI	76	1
	ILLINOIS	CONTRACT NO. 78793		

STATE OF ILLINOIS
DEPARTMENT OF TRANSPORTATION

PROPOSED HIGHWAY PLANS

FAS ROUTE 2937 (IL 169)
SECTION 116B-1
PROJECT STP-BFV4(900)
STRUCTURE REPLACEMENT
PULASKI COUNTY

FOR INDEX OF SHEETS, SEE SHEET NO. 3
FOR SUMMARY OF QUANTITIES, SEE SHEET NO. 4 TO 9

TRAFFIC DATA

ROADWAY CLASSIFICATION: MAJOR COLLECTOR (NON-URBAN)
CURRENT ADT (2017) = 1,800
DESIGN YEAR ADT (2040) = 2,260
SU = 7.7%
MU = 2.2%

TOWNSHIP

KARNAK

COORDINATE SYSTEM : STATE PLANE ZONE - ILLINOIS EAST
POSTED SPEED : 55 MPH

D-99-044-20

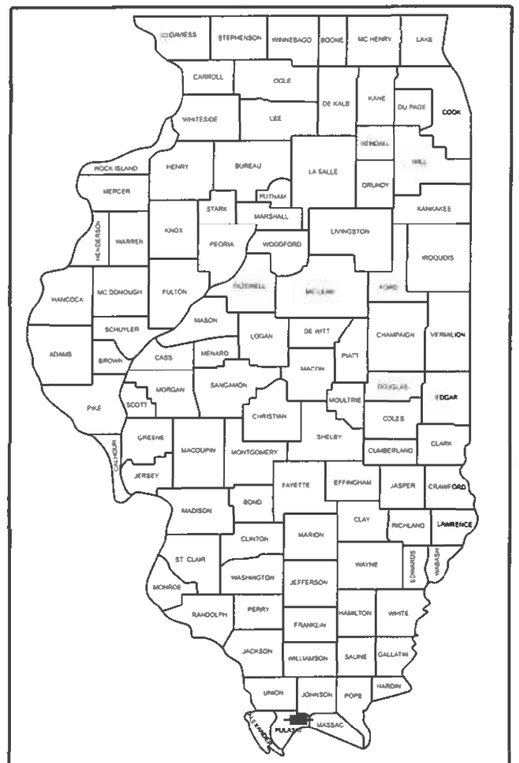

LOCATION OF SECTION INDICATED THUS: -

C-99-066-20

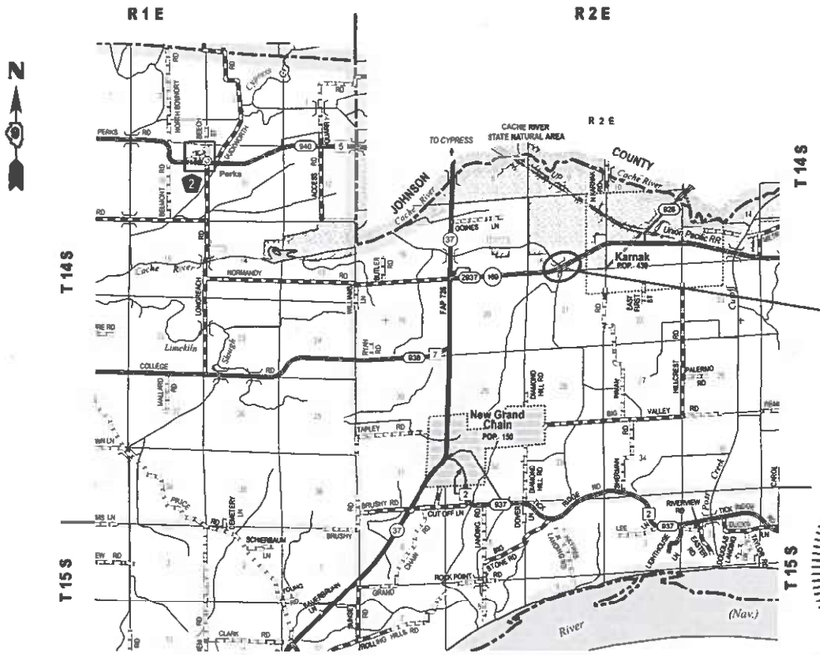

LOCATION MAP

GROSS LENGTH = 456.49 FT. = 0.086 MILE
NET LENGTH = 456.49 FT. = 0.086 MILE

IMPROVEMENT LIMITS - STA. 76+67.52 TO STA. 81+24.01
EX SN 077-0023 / PR SN 077-0042

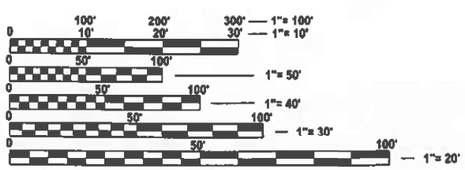

FULL SIZE PLANS HAVE BEEN PREPARED USING STANDARD ENGINEERING SCALES. REDUCED SIZED PLANS WILL NOT CONFORM TO STANDARD SCALES. IN MAKING MEASUREMENTS ON REDUCED PLANS, THE ABOVE SCALES MAY BE USED.

J.U.L.I.E.
JOINT UTILITY LOCATION INFORMATION FOR EXCAVATION
1-800-892-0123
OR 811

MATTHEW OVERBEY
062-064044
LICENSED PROFESSIONAL ENGINEER OF ILLINOIS

SEAL

SIGNATURE: Matthew J Overbey
DATE SIGNED: 06/26/2025
LICENSE EXPIRATION DATE: 11/30/2025

STATE OF ILLINOIS
DEPARTMENT OF TRANSPORTATION

SUBMITTED June 27 20 25
REGIONAL ENGINEER

August 15 20 25
ENGINEER OF DESIGN AND ENVIRONMENT

August 15 20 25
DIRECTOR OF HIGHWAYS PROJECT IMPLEMENTATION

PROJECT ENGINEER : EHREN KIRBY, PE
PROJECT DESIGNER : CMT, INC.

CONTRACT NO. 78793

CMT

PRINTED BY THE AUTHORITY OF THE STATE OF ILLINOIS

Prepared By: Susan Rue

DISTRICT STUDIES & PLANS ENGINEER

Examined By: Nancy Lee

DISTRICT LAND ACQUISITION ENGINEER

Examined By: Carr Nelson

DISTRICT PROGRAM DEVELOPMENT ENGINEER

Examined By: R. Cox

DISTRICT OPERATIONS ENGINEER

Examined By:

DISTRICT PROJECT IMPLEMENTATION ENGINEER

Examined By: Burdwille

DISTRICT CONSTRUCTION ENGINEER

Examined By: Aaron Yanger

DISTRICT MATERIALS ENGINEER

MODEL: 02-Signature (Sheet)
FILE NAME: ...Sheet\D79793-sht-Cover.dgn

CMT

USER NAME = Matt Overbey	DESIGNED - AJ	REVISED -	
	DRAWN - RAH	REVISED -	
	CHECKED - MJO	REVISED -	
PLOT DATE = 6/17/2025	DATE - 6/26/2025	REVISED -	

STATE OF ILLINOIS
DEPARTMENT OF TRANSPORTATION

F.A.S. 2937 (ILLINOIS ROUTE 169)
SIGNATURE BLOCK

SCALE: | SHEET 1 OF 1 SHEETS | STA. | TO STA.

F.A.S. RTE	SECTION	COUNTY	TOTAL SHEETS	SHEET NO.
2937	116B-1	PULASKI	76	2

CONTRACT NO. 78793

ILLINOIS FED. AID PROJECT

GENERAL NOTES

1. THE QUANTITY OF SHORT TERM PAVEMENT MARKING SHOWN IN THE PLANS IS BASED ON ONE APPLICATION EACH FOR THE HMA SURFACE REMOVAL AND SURFACE COURSE.

2. AT ALL LOCATIONS WHERE THE PROPOSED HOT MIX ASPHALT OR CONCRETE PAVEMENT JOINS AN EXISTING HOT MIX ASPHALT OR CONCRETE PAYMENT, A FULL DEPTH SAWED JOINT SHALL BE CONSTRUCTED. THE COST OF THIS JOINT WILL BE INCLUDED IN THE COST OF THE TYPE OF PAVEMENT BEING CONSTRUCTED.

3. LONGITUDINAL JOINT SEALANT SHALL BE PLACED ALONG THE CENTERLINE JOINT, UNDER THE HMA SURFACE COURSE.

   ALL HOT-MIX ASPHALT . . . . . = 2.016 TONS / CU. YD.

   SUBBASE GRANULAR MATERIAL . . . . . = 2.05 TONS / CU. YD.

   RIPRAP . . . . . = 1.5 TONS / CU. YD.

   THE ALGEBRAIC DIFFERENCE BETWEEN THE PAVEMENT AND SHOULDER SLOPES SHALL NOT EXCEED 8% or 10%. THE SHOULDER ON THE OUTSIDE OF SUPERELEVATED CURVES SHALL BE FLATTENED ACCORDINGLY.

HIGHWAY STANDARDS

000001-08	STANDARD SYMBOLS, ABBREVIATIONS AND PATTERNS
001001-02	AREAS OF REINFORCEMENT BARS
001006	DECIMAL OF AN INCH AND OF A FOOT
280001-07	TEMPORARY EROSION CONTROL SYSTEMS
420001-10	PAVEMENT JOINTS
420101-07	24' (7.2M) JOINTED PCC PAVEMENT
420401-13	PAVEMENT CONNECTOR (PCC) FOR BRIDGE APPROACH SLAB
482006-03	HMA SHOULDER ADJACENT TO RIGID PAVEMENT
515001-04	NAME PLATE FOR BRIDGES
630001-13	STEEL PLATE BEAM GUARDRAIL
630201-07	PCC / HMA STABILIZATION AT STEEL PLATE BEAM GUARDRAIL
630301-09	SHOULDER WIDENING FOR TYPE 1 (SPECIAL) GUARDRAIL TERMINALS
631061-01	TRAFFIC BARRIER TERMINAL, TYPE 13
642006-01	SHOULDER RUMBLE STRIPS, 8 IN.
701001-02	OFF-RD OPERATIONS, 2L, 2W, MORE THAN 15' AWAY
701006-05	OFF-RD OPERATIONS, 2L, 2W, 15' TO 24" FROM PAVEMENT EDGE
701011-04	OFF-RD MOVING OPERATIONS, 2L, 2W, DAY ONLY
701201-05	LANE CLOSURE 2L, 2W, DAY ONLY, FOR SPEEDS ≥ 45 MPH
701301-04	LANE CLOSURE 2L, 2W, SHORT TIME OPERATIONS
701311-03	LANE CLOSURE 2L, 2W, MOVING OPERATIONS
701321-19	LANE CLOSURE 2L, 2W, BRIDGE REPAIR WITH BARRIER
701901-10	TRAFFIC CONTROL DEVICES
704001-08	TEMPORARY CONCRETE BARRIER
725001-01	OBJECT AND TERMINAL MARKERS
780001-05	TYPICAL PAVEMENT MARKINGS
781001-04	TYPICAL APPLICATIONS RAISED REFLECTIVE PAVEMENT MARKERS
782006-01	GUARDRAIL AND BARRIER WALL REFLECTOR MOUNTING DETAILS
420701-03	PAVEMENT WELDED WIRE REINFORCEMENT

INDEX OF SHEETS

HMA MIXTURE TABLE

Locations	Hot-Mix Asphalt Surface Course
Mixture Use(s):	Hot-Mix Asphalt Surface Course, Mix C, N70
PG:	PG64-22
Design Air Voids:	4.0%, 70 Gyration Design
Mixture Composition: (Gradation Mixture)	IL-9.5mm
Friction Aggregate:	Mix C
Mixture Weight:	112 lbs/sq yd/in
Quality Management Program:	QC/QA
Sublot Size:	3,000 tons
Material Transfer Device	No

Locations	Hot Mix Asphalt Shoulders 10" (Surface)
Mixture Use(s):	Hot-Mix Asphalt Surface Course, Mix C, N30
PG:	PG64-22
Design Air Voids:	4.0%, 30 Gyration Design
Mixture Composition: (Gradation Mixture)	IL-9.5L
Friction Aggregate:	None
Mixture Weight:	112 lbs/sq yd/in
Quality Management Program:	QC/QA
Sublot Size:	3,000 tons
Material Transfer Device	No

Locations	Hot Mix Asphalt Shoulders 10" (Binder)
Mixture Use(s):	Hot-Mix Asphalt Binder Course, IL-19.0mm, N70
PG64-22	PG64-22
Design Air Voids:	4.0%, 70 Gyration Design
Mixture Composition: (Gradation Mixture)	IL-19.0mm
Friction Aggregate:	None
Mixture Weight:	112 lbs/sq yd/in
Quality Management Program:	QC/QA
Sublot Size:	3,000 tons
Material Transfer Device	No

Hot Mix Asphalt Shoulders 10", Lift thickness requirements:	
1 ½"	Surface
2 ¼"	Binder
2 ¼"	Binder
4"	Binder

COMMITMENTS

1. TREES SHALL NOT BE CLEARED FROM APRIL 1ST THROUGH SEPTEMBER 30TH OF ANY GIVEN YEAR.

REV - MS

MODEL: GenNotes [Sheet]
FILE NAME: ...\Sheet\D978793-sht-gennote.dgn

CMT
License No. 184-000613 © Copyright CMT, Inc.

USER NAME = Matt Overbey	DESIGNED - AJ	REVISED -	
	DRAWN - RAH	REVISED -	
	CHECKED - MJO	REVISED -	
PLOT DATE = 7/2/2025	DATE - 6/26/2025	REVISED -	

STATE OF ILLINOIS
DEPARTMENT OF TRANSPORTATION

F.A.S. 2937 (ILLINOIS ROUTE 169)
GENERAL NOTES, HIGHWAY STANDARDS & INDEX OF SHEETS

SCALE: SHEET 1 OF 1 SHEETS STA. TO STA.

F.A.S. RTE.	SECTION	COUNTY	TOTAL SHEETS	SHEET NO.
2937	116B-1	PULASKI	76	3

CONTRACT NO. 78793

ILLINOIS FED. AID PROJECT

CODE NO.	ITEM	UNIT	TOTAL QUANTITY	CONSTRUCTION CODE F.A.S. 2937 - PULASKI COUNTY FUNDING: 80% FEDERAL, 20% STATE ROADWAY 0010 RURAL	BRIDGE 0010 S.N. 077-0042
20200100	EARTH EXCAVATION	CU YD	56	56	
20400800	FURNISHED EXCAVATION	CU YD	24	24	
25000210	SEEDING, CLASS 2A	ACRE	0.11	0.11	
25000350	SEEDING, CLASS 7	ACRE	0.11	0.11	
25000400	NITROGEN FERTILIZER NUTRIENT	POUND	11	11	
25000500	PHOSPHORUS FERTILIZER NUTRIENT	POUND	11	11	
25000600	POTASSIUM FERTILIZER NUTRIENT	POUND	11	11	
25000700	AGRICULTURAL GROUND LIMESTONE	TON	0.4	0.4	
25100115	MULCH, METHOD 2	ACRE	0.11	0.11	
28000250	TEMPORARY EROSION CONTROL SEEDING	POUND	11	11	
28000400	PERIMETER EROSION BARRIER	FOOT	828	828	
28100107	STONE RIPRAP, CLASS A4	SQ YD	737		737
28200200	FILTER FABRIC	SQ YD	737		737
31100300	SUBBASE GRANULAR MATERIAL, TYPE A 4"	SQ YD	945	945	

REV - MS

MODEL: SOQ-1 [Sheet]
FILE NAME: ...\Sheet\0978793-sht-SOQ.dgn

CMT
License No. 184-000613

USER NAME = Matt Overbey	DESIGNED - AJ	REVISED -	
	DRAWN - RAH	REVISED -	
	CHECKED - MJO	REVISED -	
PLOT DATE = 7/2/2025	DATE - 6/26/2025	REVISED -	

STATE OF ILLINOIS
DEPARTMENT OF TRANSPORTATION

F.A.S. 2937 (ILLINOIS ROUTE 169)
SUMMARY OF QUANTITIES

SCALE: SHEET 1 OF 7 SHEETS STA. TO STA.

F.A.S. RTE.	SECTION	COUNTY	TOTAL SHEETS	SHEET NO.
2937	116B-1	PULASKI	76	4

CONTRACT NO. 78793

ILLINOIS FED. AID PROJECT

CODE NO.	ITEM	UNIT	TOTAL QUANTITY	CONSTRUCTION CODE F.A.S. 2937 - PULASKI COUNTY FUNDING: 80% FEDERAL, 20% STATE ROADWAY 0010 RURAL	BRIDGE 0010 S.N. 077-0042
40200800	AGGREGATE SURFACE COURSE, TYPE B	TON	9.8	9.8	
40600275	BITUMINOUS MATERIALS (PRIME COAT)	POUND	1,131	1,131	
40600290	BITUMINOUS MATERIALS (TACK COAT)	POUND	452	452	
40600370	LONGITUDINAL JOINT SEALANT	FOOT	185	185	
40600982	HOT-MIX ASPHALT SURFACE REMOVAL - BUTT JOINT	SQ YD	192	192	
40604052	HOT-MIX ASPHALT SURFACE COURSE, IL-9.5, MIX "C", N70	TON	64	64	
42000060	WELDED WIRE REINFORCEMENT	SQ YD	159	159	
42000080	PAVEMENT CONNECTOR (PCC) FOR BRIDGE APPROACH SLAB	SQ YD	159	159	
42000500	PORTLAND CEMENT CONCRETE PAVEMENT 10"	SQ YD	273	273	
42001300	PROTECTIVE COAT	SQ YD	431	431	
44000100	PAVEMENT REMOVAL	SQ YD	492	492	
44000155	HOT-MIX ASPHALT SURFACE REMOVAL, 1 1/2"	SQ YD	324	324	
44004250	PAVED SHOULDER REMOVAL	SQ YD	401	401	
48203037	HOT-MIX ASPHALT SHOULDERS, 10"	SQ YD	421	421	

REV - MS

CODE NO.	ITEM	UNIT	TOTAL QUANTITY	CONSTRUCTION CODE F.A.S. 2937 - PULASKI COUNTY FUNDING: 80% FEDERAL, 20% STATE ROADWAY 0010 RURAL	BRIDGE 0010 S.N. 077-0042
50100100	REMOVAL OF EXISTING STRUCTURES	EACH	1		1
50200100	STRUCTURE EXCAVATION	CU YD	322		322
50200300	COFFERDAM EXCAVATION	CU YD	321		321
50201101	COFFERDAM (TYPE 1) (LOCATION - 1)	EACH	1		1
50201102	COFFERDAM (TYPE 1) (LOCATION - 2)	EACH	1		1
50300225	CONCRETE STRUCTURES	CU YD	125.1		125.1
50300255	CONCRETE SUPERSTRUCTURE	CU YD	140.5		140.5
50300260	BRIDGE DECK GROOVING	SQ YD	479		479
50300300	PROTECTIVE COAT	SQ YD	512		512
50301350	CONCRETE SUPERSTRUCTURE (APPROACH SLAB)	CU YD	89.3		89.3
50800205	REINFORCEMENT BARS, EPOXY COATED	POUND	118,130		118,130
50800515	BAR SPLICERS	EACH	726		726
50900211	STEEL RAILING, TYPE IL-OH	FOOT	219		219
51200958	FURNISHING METAL SHELL PILES 14" X 0.250"	FOOT	1,270		1,270

REV - MS

MODEL: SOQ-3 [Sheet]
FILE NAME: ...\Sheet\0978793-sht-SOQ.dgn

CMT
License No. 184-000613 © Copyright CMT, Inc.

USER NAME = Matt Overbey	DESIGNED - AJ	REVISED -	
	DRAWN - RAH	REVISED -	
	CHECKED - MJO	REVISED -	
PLOT DATE = 6/26/2025	DATE - 6/26/2025	REVISED -	

STATE OF ILLINOIS
DEPARTMENT OF TRANSPORTATION

F.A.S. 2937 (ILLINOIS ROUTE 169)
SUMMARY OF QUANTITIES

SCALE: SHEET 3 OF 7 SHEETS STA. TO STA.

F.A.S. RTE.	SECTION	COUNTY	TOTAL SHEETS	SHEET NO.
2937	116B-1	PULASKI	76	6
		CONTRACT NO. 78793		
		ILLINOIS	FED. AID PROJECT	

CONSTRUCTION CODE					
F.A.S. 2937 - PULASKI COUNTY					
FUNDING: 80% FEDERAL, 20% STATE					
				ROADWAY	BRIDGE
CODE NO.	ITEM	UNIT	TOTAL QUANTITY	0010 RURAL	0010 S.N. 077-0042
51202305	DRIVING PILES	FOOT	1,270		1,270
51203200	TEST PILE METAL SHELLS	EACH	2		2
51500100	NAME PLATES	EACH	1		1
52200020	TEMPORARY SOIL RETENTION SYSTEM	SQ FT	241		241
58600101	GRANULAR BACKFILL FOR STRUCTURES	CU YD	76		76
60146304	PIPE UNDERDRAINS FOR STRUCTURES 4"	FOOT	78		78
* 63000001	STEEL PLATE BEAM GUARDRAIL, TYPE A, 6 FOOT POSTS	FOOT	137.5	137.5	
* 63100117	TRAFFIC BARRIER TERMINAL, TYPE 13	EACH	4	4	
* 63100167	TRAFFIC BARRIER TERMINAL, TYPE 1 (SPECIAL) TANGENT	EACH	3	3	
63200310	GUARDRAIL REMOVAL	FOOT	466	466	
67000400	ENGINEER'S FIELD OFFICE, TYPE A	CAL MO	18	18	
67100100	MOBILIZATION	L SUM	1	1	
70100405	TRAFFIC CONTROL AND PROTECTION, STANDARD 701321	EACH	1	1	
70100450	TRAFFIC CONTROL AND PROTECTION, STANDARD 701201	L SUM	1	1	

* SPECIALTY ITEM

REV - MS

MODEL: SOQ-4 [Sheet]
FILE NAME: ...\Sheet\0978793-sht-SOQ.dgn

CMT
License No. 184-000613 © Copyright CMT, Inc.

USER NAME = Matt Overbey	DESIGNED - AJ	REVISED -	
	DRAWN - RAH	REVISED -	
	CHECKED - MJO	REVISED -	
PLOT DATE = 6/26/2025	DATE - 6/26/2025	REVISED -	

STATE OF ILLINOIS
DEPARTMENT OF TRANSPORTATION

F.A.S. 2937 (ILLINOIS ROUTE 169)
SUMMARY OF QUANTITIES

SCALE: | SHEET 4 OF 7 SHEETS | STA. TO STA.

F.A.S. RTE.	SECTION	COUNTY	TOTAL SHEETS	SHEET NO.
2937	116B-1	PULASKI	76	7
		CONTRACT NO. 78793		
		ILLINOIS	FED. AID PROJECT	

CODE NO.	ITEM	UNIT	TOTAL QUANTITY	CONSTRUCTION CODE F.A.S. 2937 - PULASKI COUNTY FUNDING: 80% FEDERAL, 20% STATE ROADWAY 0010 RURAL	BRIDGE 0010 S.N. 077-0042
70103815	TRAFFIC CONTROL SURVEILLANCE	CAL DA	6	6	
70106500	TEMPORARY BRIDGE TRAFFIC SIGNALS	EACH	1	1	
70106700	TEMPORARY RUMBLE STRIPS	EACH	12	12	
70107025	CHANGEABLE MESSAGE SIGN	CAL DA	28	28	
70300100	SHORT TERM PAVEMENT MARKING	FOOT	64	64	
70300150	SHORT TERM PAVEMENT MARKING REMOVAL	SQ FT	22	22	
70400100	TEMPORARY CONCRETE BARRIER	FOOT	612.5	612.5	
70400125	PINNING TEMPORARY CONCRETE BARRIER	EACH	24	24	
70400200	RELOCATE TEMPORARY CONCRETE BARRIER	FOOT	612.5	612.5	
70600260	IMPACT ATTENUATORS, TEMPORARY (FULLY REDIRECTIVE, NARROW), TEST LEVEL 3	EACH	2	2	
70600332	IMPACT ATTENUATORS, RELOCATE (FULLY REDIRECTIVE, NARROW), TEST LEVEL 3	EACH	2	2	
* 72501000	TERMINAL MARKER - DIRECT APPLIED	EACH	4	4	
* 78009004	MODIFIED URETHANE PAVEMENT MARKING - LINE 4"	FOOT	3,263	3,263	
* 78200005	GUARDRAIL REFLECTORS, TYPE A	EACH	16	16	

* SPECIALTY ITEM

REV - MS

MODEL: SOQ-5 [Sheet]
FILE NAME: ...\Sheet\0978793-sht-SOQ.dgn

CMT
License No. 184-000613 © Copyright CMT, Inc.

USER NAME = Matt Overbey	DESIGNED - AJ	REVISED -	
	DRAWN - RAH	REVISED -	
	CHECKED - MJO	REVISED -	
PLOT DATE = 6/26/2025	DATE - 6/26/2025	REVISED -	

STATE OF ILLINOIS
DEPARTMENT OF TRANSPORTATION

F.A.S. 2937 (ILLINOIS ROUTE 169)
SUMMARY OF QUANTITIES

SCALE: SHEET 5 OF 7 SHEETS STA. TO STA.

F.A.S. RTE.	SECTION	COUNTY	TOTAL SHEETS	SHEET NO.
2937	116B-1	PULASKI	76	8

CONTRACT NO. 78793

ILLINOIS FED. AID PROJECT

	CODE NO.	ITEM	UNIT	TOTAL QUANTITY	CONSTRUCTION CODE F.A.S. 2937 - PULASKI COUNTY FUNDING: 80% FEDERAL, 20% STATE ROADWAY 0010 RURAL	BRIDGE 0010 S.N. 077-0042
*	78200011	BARRIER WALL REFLECTORS, TYPE C	EACH	16	16	
	78300200	RAISED REFLECTIVE PAVEMENT MARKER REMOVAL	EACH	12	12	
	78300201	PAVEMENT MARKING REMOVAL - GRINDING	SQ FT	753	753	
*	X6310195	TRAFFIC BARRIER TERMINAL TYPE 1, SPECIAL (TANGENT), MODIFIED	EACH	1	1	
	Z0001900	ASBESTOS BEARING PAD REMOVAL	EACH	20		20
	Z0013798	CONSTRUCTION LAYOUT	L SUM	1	1	
Ø	Z0076600	TRAINEES	HOUR	1000	1000	
Ø	Z0076604	TRAINEES TRAINING PROGRAM GRADUATE	HOUR	1000	1000	

Ø 0042

* SPECIALTY ITEM

REV - MS

MODEL: SOQ-6 [Sheet]
FILE NAME: ...\Sheet\0978793-sht-SOQ.dgn

CMT
License No. 184-000613 © Copyright CMT, Inc.

USER NAME = Matt Overbey	DESIGNED - AJ	REVISED -	
	DRAWN - RAH	REVISED -	
	CHECKED - MJO	REVISED -	
PLOT DATE = 7/2/2025	DATE - 6/26/2025	REVISED -	

STATE OF ILLINOIS
DEPARTMENT OF TRANSPORTATION

F.A.S. 2937 (ILLINOIS ROUTE 169)
SUMMARY OF QUANTITIES

SCALE: SHEET 6 OF 7 SHEETS STA. TO STA.

F.A.S. RTE.	SECTION	COUNTY	TOTAL SHEETS	SHEET NO.
2937	116B-1	PULASKI	76	9

CONTRACT NO. 78793

ILLINOIS FED. AID PROJECT

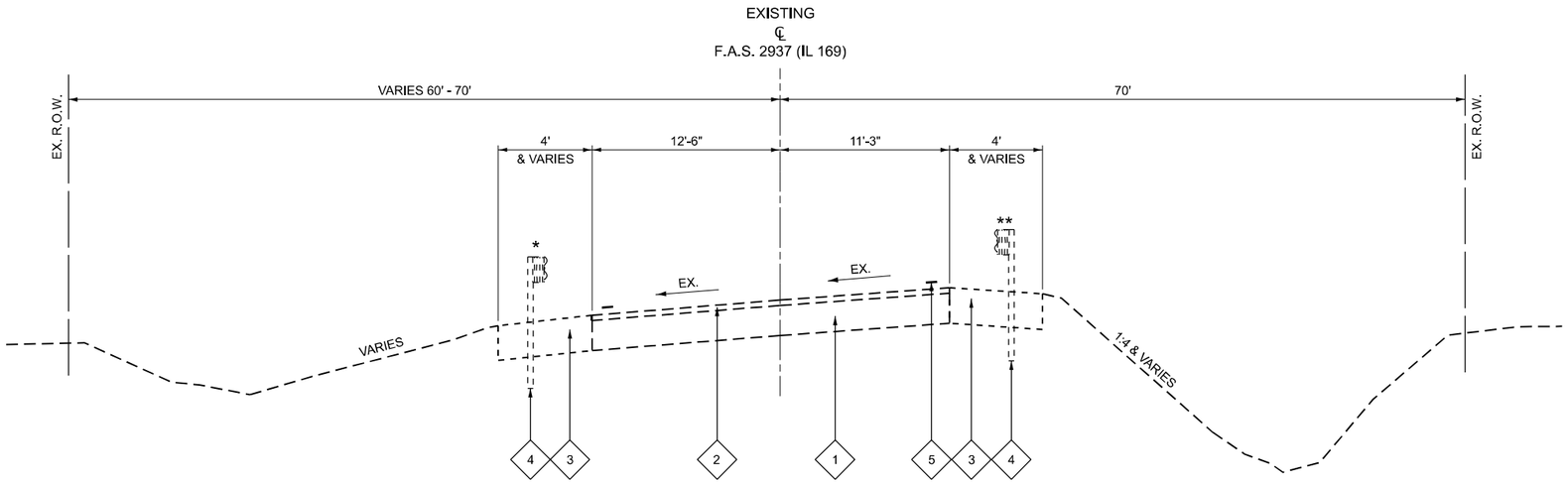

EXISTING FAS ROUTE 2937 (IL 169)

STA 76+78.32 TO STA 78+05.79

* EXISTING LEFT GUARDRAIL : STA. 77+26.26 TO STA. 78+39.69
STA. 79+42.82 TO STA. 80+95.32

** EXISTING RIGHT GUARDRAIL : STA. 77+09.60 TO STA. 78+41.52
STA. 79+44.59 TO STA. 80+09.89

TYPICAL SECTION LEGEND

1. EXISTING PCC PAVEMENT (9")
2. EXISTING HMA OVERLAY (3")
3. EXISTING HMA SHOULDER (12")
4. EXISTING GUARDRAIL
5. EXISTING PAVEMENT MARKING

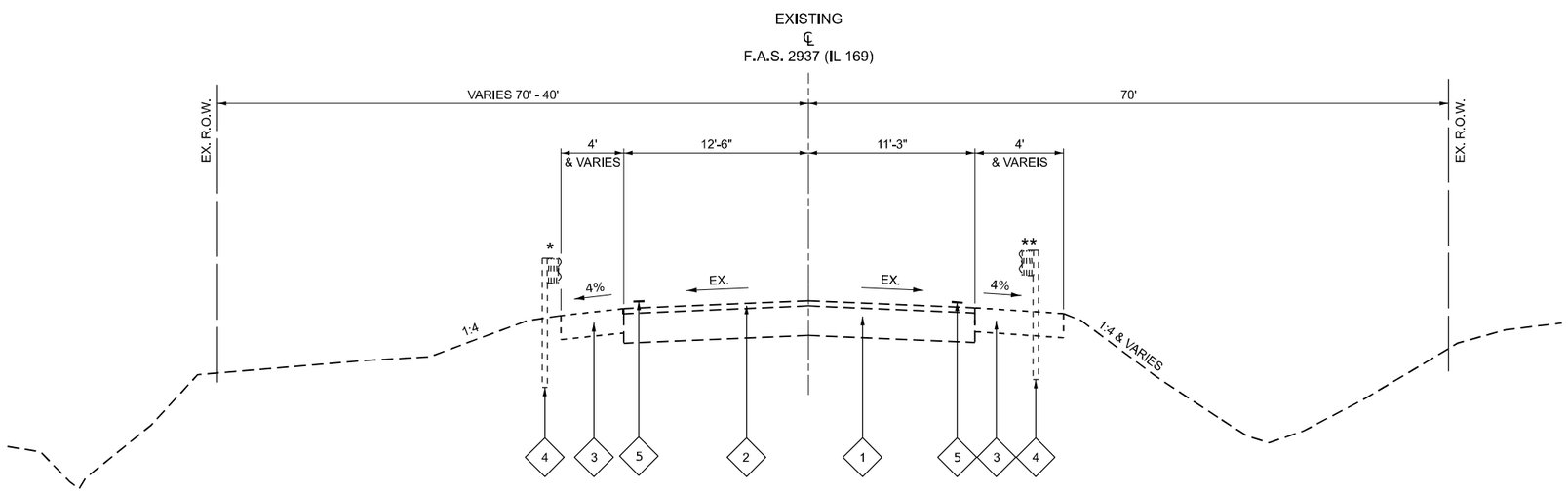

EXISTING FAS ROUTE 2937 (IL 169)

STA 78+05.79 TO STA 81+24.01

MODEL: Typical-01 [Sheet]
FILE NAME: ...\Sheet\D978793-sht-typical.dgn

CMT
License No. 184-000613

USER NAME = Matt Overbey	DESIGNED - AJ	REVISED -	
	DRAWN - RAH	REVISED -	
	CHECKED - MJO	REVISED -	
PLOT DATE = 6/26/2025	DATE - 6/26/2025	REVISED -	

STATE OF ILLINOIS
DEPARTMENT OF TRANSPORTATION

F.A.S. 2937 (ILLINOIS ROUTE 169)
TYPICAL SECTONS - EXISTING

SCALE: | SHEET 1 OF 3 SHEETS | STA. TO STA.

F.A.S. RTE.	SECTION	COUNTY	TOTAL SHEETS	SHEET NO.
2937	116B-1	PULASKI	76	10

CONTRACT NO. 78793

ILLINOIS | FED. AID PROJECT

TYPICAL SECTION LEGEND

1	EXISTING PCC PAVEMENT (9")
2	EXISTING HMA OVERLAY (3")
3	EXISTING HMA SHOULDER (12")
4	EXISTING GUARDRAIL
5	EXISTING PAVEMENT MARKING
6	PROPOSED HOT-MIX ASPHALT SURFACE COURSE (1.5" MIN. & VARIES)
7	PROPOSED HOT-MIX ASPHALT SHOULDER, 10"
8	PROPOSED PCC PAVEMENT, 10"
9	PROPOSED SUBBASE GRANULAR MATERIAL TY "A", 4"
10	PROPOSED STEEL PLATE BEAM GUARDRAIL
11	PROPOSED PAVEMENT MARKING
12	PROPOSED SUBBASE GRANULAR MATERIAL TYPE A (VARIES)
13	PROPOSED REMOVAL MILLING SHOULDER PAVEMENT

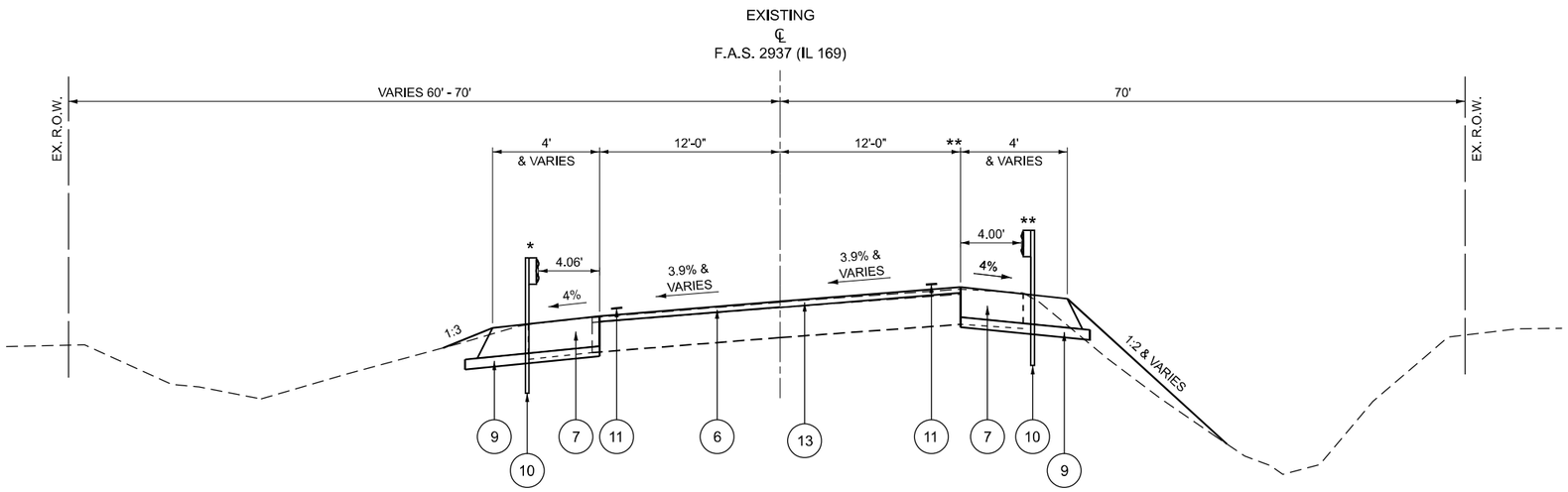

PROPOSED FAS ROUTE 2937 (IL 169)

STA 76+67.52 TO STA 77+58.21

* PROPOSED LEFT GUARDRAIL : STA. 77+30.55 TO STA. 77+58.21

** PROPOSED RIGHT GUARDRAIL : STA. 77+18.20 TO STA. 77+58.21

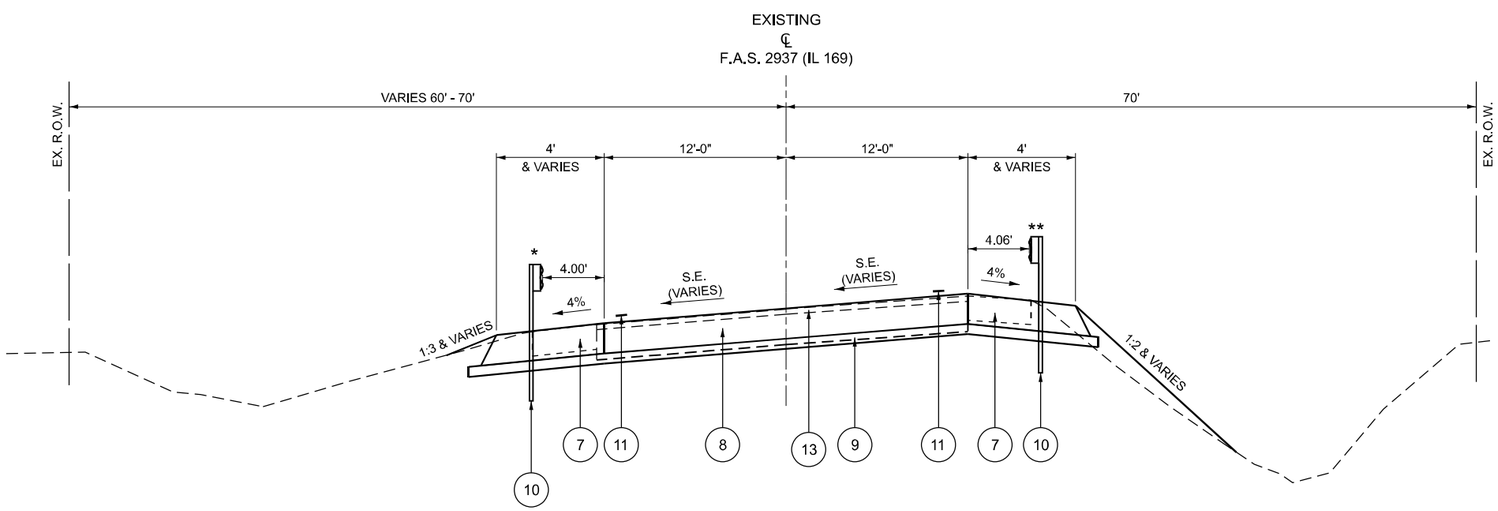

PROPOSED FAS ROUTE 2937 (IL 169)

* PROPOSED LEFT GUARDRAIL : STA. 77+58.21 TO STA. 78+06.21

** PROPOSED RIGHT GUARDRAIL : STA. 77+58.21 TO STA. 78+06.21

MODEL: Typical-02 [Sheet]
FILE NAME: ...\Sheet\D978793-sht-typical.dgn

CMT
License No. 184-000613

USER NAME = Matt Overbey	DESIGNED - AJ	REVISED -	
	DRAWN - RAH	REVISED -	
	CHECKED - MJO	REVISED -	
PLOT DATE = 6/26/2025	DATE - 6/26/2025	REVISED -	

STATE OF ILLINOIS
DEPARTMENT OF TRANSPORTATION

F.A.S. 2937 (ILLINOIS ROUTE 169)
TYPICAL SECTONS - PROPOSED

SCALE: | SHEET 2 OF 3 SHEETS | STA. TO STA.

F.A.S. RTE.	SECTION	COUNTY	TOTAL SHEETS	SHEET NO.
2937	116B-1	PULASKI	76	11

CONTRACT NO. 78793

ILLINOIS | FED. AID PROJECT

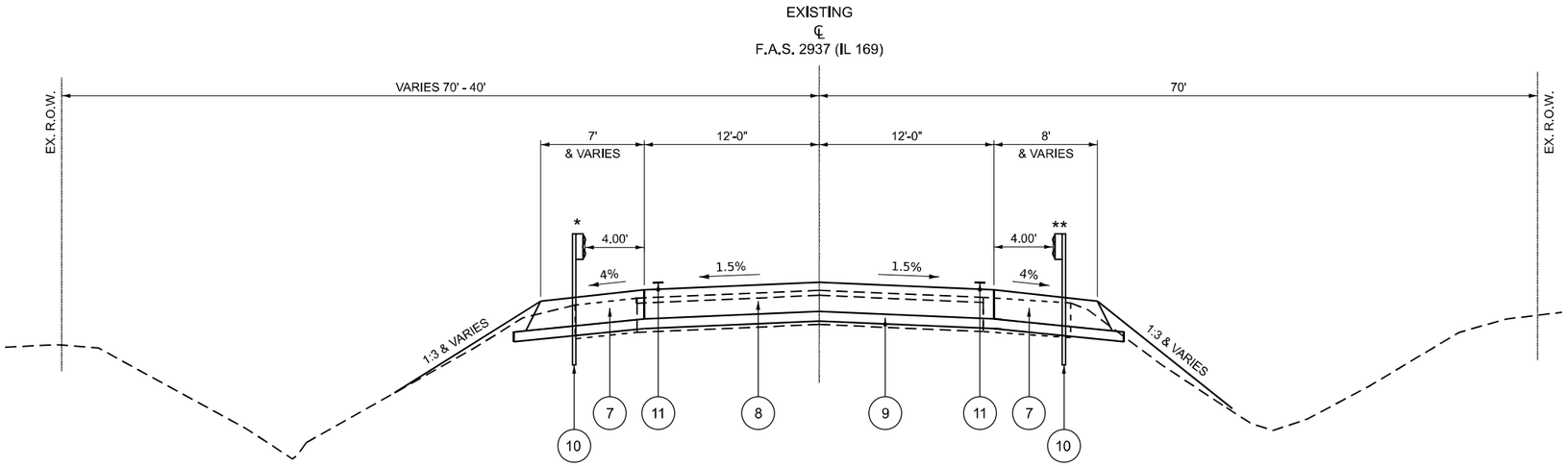

PROPOSED FAS ROUTE 2937 (IL 169)

STA 78+06.21 TO STA 80+30.00
BRIDGE OMISSION STA 78+50.21 TO STA 79+35.79

* PROPOSED LEFT GUARDRAIL : STA. 78+06.21 TO STA. 78+21.21
STA. 79+64.79 TO STA. 81+05.36

** PROPOSED RIGHT GUARDRAIL : STA. 78+06.21 TO STA. 78+46.21
STA. 79+39.79 TO STA. 80+04.19

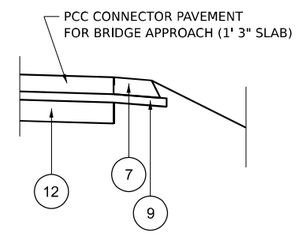

STA. 78+06.21 TO STA. 78+21.21
STA. 79+64.79 TO STA. 79+79.79

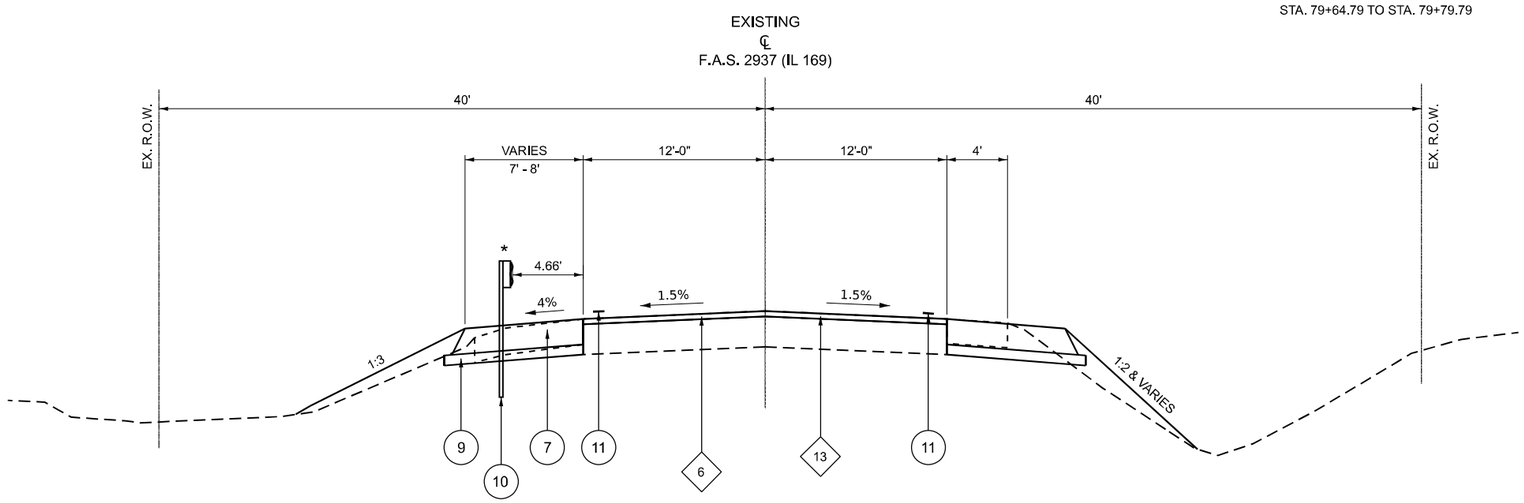

PROPOSED FAS ROUTE 2937 (IL 169)

STA 80+30.00 TO STA 81+24.01

TYPICAL SECTION LEGEND

1	EXISTING PCC PAVEMENT (9")
2	EXISTING HMA OVERLAY (3")
3	EXISTING HMA SHOULDER (12")
4	EXISTING PAVEMENT MARKING
5	EXISTING GUARDRAIL
6	PROPOSED HOT-MIX ASPHALT SURFACE COURSE, IL-9.5, (1.5" MIN. & VARIES)
7	PROPOSED HOT-MIX ASPHALT SHOULDER, 10"
8	PROPOSED PCC PAVEMENT, 10"
9	PROPOSED SUBBASE GRANULAR MATERIAL TY "A", 4"
10	PROPOSED STEEL PLATE BEAM GUARDRAIL
11	PROPOSED PAVEMENT MARKING
12	PROPOSED SUBBASE GRANULAR MATERIAL TYPE A (VARIES)
13	PROPOSED REMOVAL MILLING SHOULDER PAVEMENT

MODEL: Typical-03 [Sheet]
FILE NAME: ...\Sheet\D978793-sht-typical.dgn

CMT
License No. 184-000613

USER NAME = Matt Overbey	DESIGNED - AJ	REVISED -
	DRAWN - RAH	REVISED -
	CHECKED - MJO	REVISED -
PLOT DATE = 6/26/2025	DATE - 6/26/2025	REVISED -

STATE OF ILLINOIS
DEPARTMENT OF TRANSPORTATION

F.A.S. 2937 (ILLINOIS ROUTE 169)
TYPICAL SECTONS - PROPOSED

SCALE: SHEET 3 OF 3 SHEETS STA. TO STA.

F.A.S. RTE.	SECTION	COUNTY	TOTAL SHEETS	SHEET NO.
2937	116B-1	PULASKI	76	12

CONTRACT NO. 78793

ILLINOIS FED. AID PROJECT

EARTHWORK SCHEDULE

LOCATION			EARTH EXCAVATION	AVERAGE SHRINKAGE FACTOR	EARTH EXCAVATION (ADJUSTED)	EMBANKMENT	EARTHWORK BALANCE		FURNISHED EXCAVATION	REMARKS
							EXCAVATION REQUIRED TO COMPLETE	EXCESS EXCAVATION		
STA.	TO	STA.	CU YD	%	CU YD	CU YD	CU YD	CU YD	CU YD	
76+67.52	TO	78+50.21	28	25%	21	40	19	0	19	
79+45.79	TO	81+24.01	28	25%	21	26	5	0	5	
TOTALS			**56**						**24**	

SEEDING SCHEDULE

LOCATION				SEEDING, CLASS 2A	SEEDING, CLASS 7	NITROGEN FERTILIZER NUTRIENT	PHOSPHORUS FERTILIZER NUTRIENT	POTASSIUM FERTILIZER NUTRIENT	AGRICULTURAL GROUND LIMESTONE	MULCH, METHOD 2
STA.	TO	STA.		ACRE	ACRE	POUND	POUND	POUND	TON	ACRE
76+67.52	TO	79+00.00	LT	0.03	0.03	3	3	3	0.1	0.03
76+67.52	TO	79+00.00	RT	0.03	0.03	3	3	3	0.1	0.03
79+00.00	TO	81+24.01	LT	0.02	0.02	2	2	2	0.1	0.02
79+00.00	TO	81+24.01	RT	0.03	0.03	3	3	3	0.1	0.03
TOTAL				**0.11**	**0.11**	**11**	**11**	**11**	**0.4**	**0.11**

HOT-MIX ASPHALT PAVEMENT SCHEDULE

LOCATION			SUBBASE GRANULAR MATERIAL, TYPE A 4"	BITUMINOUS MATERIALS (PRIME COAT)	BITUMINOUS MATERIALS (TACK COAT)	HMA SURFACE REMOVAL - BUTT JOINT	HMA SURFACE COURSE, IL-9.5, MIX "C", N70	HOT-MIX ASPHALT SURFACE REMOVAL 1 1/2"	LONGITUDINAL JOINT SEALANT	PAVED SHOULDER REMOVAL	HMA SHOULDERS, 10"
STA.	TO	STA.	SQ YD	POUND	POUND	SQ YD	TON	SQ YD	FOOT	SQ YD	SQ YD
76+67.52	TO	79+00.00	258	579	229	95	37.5	159	91	206	217
79+00.00	TO	81+24.01	246	552	223	97	26.3	165	94	195	204
TOTAL			**504**	**1,131**	**452**	**192**	**63.8**	**324**	**185**	**401**	**421**

**SEE PCC CONNECTOR SCHEDULE FOR ADDITIONAL SUBBASE GRANULAR MATERIAL, TYPE A 4"

PCC PAVEMENT AND PCC CONNECTOR SCHEDULE

LOCATION			PAVEMENT REMOVAL	SUBBASE GRANULAR MATERIAL, TYPE A 4"	PORTLAND CEMENT CONCRETE PAVEMENT 10"	WELDED WIRE REINFORCEMENT	PAVEMENT CONNECTOR (PCC) FOR BRIDGE APPROACH SLAB	PROTECTIVE COAT
STA.	TO	STA.	SQ YD	SQ YD	SQ YD	SQ YD	SQ YD	SQ YD
77+58.21	TO	78+06.21	237	217	128			207
78+06.21	TO	78+21.21				79	79	
79+64.79	TO	79+79.79				80	80	
79+79.79	TO	80+30.00	255	224	145			224
TOTAL			**492**	**441**	**273**	**159**	**159**	**431**

**SEE HOT-MIX ASPHALT PAVEMENT SCHEDULE FOR ADDITIONAL SUBBASE GRANULAR MATERIAL, TYPE A 4"

PAVEMENT MARKING SCHEDULE

LOCATION			MODIFIED URETHANE PAVEMENT MARKING - LINE 4"		RAISED REFLECTIVE PAVEMENT MARKER REMOVAL
			WHITE	YELLOW	
STA.	TO	STA.	FOOT	FOOT	EACH
73+56.00	TO	79+00.00	1,060	670	6
79+00.00	TO	83+70.04	942	591	6
TOTAL			**3,263**		**12**

TEMPORARY PAVEMENT MARKING SCHEDULE

LOCATION			SHORT TERM PAVEMENT MARKING	SHORT TERM PAVEMENT MARKING REMOVAL	PAVEMENT MARKING REMOVAL - GRINDING
STA.	TO	STA.	FOOT	SQ FT	SQ FT
73+30.00	TO	79+00.00	40	14	399
79+00.00	TO	83+70.54	24	8	354
TOTAL			**64**	**22**	**753**

MODEL: SCH-3 [Sheet]
FILE NAME: ...\Sheet\D978793-sht-schedule.dgn

CMT
License No. 184-000613

USER NAME = Matt Overbey	DESIGNED - AJ	REVISED -
	DRAWN - RAH	REVISED -
	CHECKED - MJO	REVISED -
PLOT DATE = 6/26/2025	DATE - 6/26/2025	REVISED -

STATE OF ILLINOIS
DEPARTMENT OF TRANSPORTATION

F.A.S. 2937 (ILLINOIS ROUTE 169)
SCHEDULE OF QUANTITIES

SCALE: | SHEET 3 OF 5 SHEETS | STA. TO STA.

F.A.S. RTE.	SECTION	COUNTY	TOTAL SHEETS	SHEET NO.
2937	116B-1	PULASKI	76	15

CONTRACT NO. 78793

ILLINOIS | FED. AID PROJECT

MAINTENANCE OF TRAFFIC SCHEDULE

LOCATION			TEMPORARY CONCRETE BARRIER	RELOCATE TEMPORARY CONCRETE BARRIER	PINNING TEMPORARY CONCRETE BARRIER	IMPACT ATTENUATOR, TEMPORARY (FULLY-REDIRECTIVE, NARROW), TEST LEVEL 3	IMPACT ATTENUATOR, RELOCATE (FULLY-REDIRECTIVE, NARROW), TEST LEVEL 3	BARRIER WALL REFLECTORS, TYPE C
STA.	TO	STA.	FOOT	FOOT	EACH	EACH	EACH	EACH
STAGE 1								
74+21.84	TO	79+00.00	325		6	1		4
79+00.00	TO	83+43.50	287.5		6	1		4
STAGE 2								
73+70.48	TO	79+00.00		313	6		1	4
79+00.00	TO	83+70.54		300.0	6		1	4
TOTAL			**612.5**	**612.5**	**24**	**2**	**2**	**16**

GUARDRAIL SCHEDULE

LOCATION				STEEL PLATE BEAM GUARDRAIL, TYPE A, 6 FOOT POSTS	TRAFFIC BARRIER TERMINAL, TYPE 13	TRAFFIC BARRIER TERMINAL, TYPE 1 (SPECIAL) TANGENT	TRAFFIC BARRIER TERMINAL, TYPE 1 (SPECIAL) TANGENT, MODIFIED	GUARDRAIL REMOVAL	TERMINAL MARKER - DIRECT APPLIED	GUARDRAIL REFLECTORS, TYPE A
STA.	TO	STA.	OFFSET	FOOT	EACH	EACH	EACH	FOOT	EACH	EACH
77+30.55	TO	78+46.21	LT	25.0	1	1		114	1	4
77+18.17	TO	78+46.21	RT	37.5	1	1		133	1	4
79+39.79	TO	81+05.36	LT	75.0	1	1		153	1	4
79+39.79	TO	80+04.21	RT		1		1	66	1	4
TOTAL				**137.5**	**4**	**3**	**1**	**466**	**4**	**16**

EROSION CONTROL SCHEDULE

LOCATION				PERIMETER EROSION BARRIER	TEMPORARY EROSION CONTROL SEEDING
STA.	TO	STA.		FOOT	POUND
76+67.52	TO	79+00.00	LT	199	3
76+67.52	TO	79+00.00	RT	247	3
79+00.00	TO	81+24.01	LT	184	2
79+00.00	TO	81+24.01	RT	198	3
TOTAL				**828**	**11**

MODEL: SCH-5 [Sheet]
FILE NAME: ...\Sheet\D978793-sht-schedule.dgn

CMT
License No. 184-000613

USER NAME = Matt Overbey	DESIGNED - AJ	REVISED -
	DRAWN - RAH	REVISED -
	CHECKED - MJO	REVISED -
PLOT DATE = 6/26/2025	DATE - 6/26/2025	REVISED -

STATE OF ILLINOIS
DEPARTMENT OF TRANSPORTATION

F.A.S. 2937 (ILLINOIS ROUTE 169)
SCHEDULE OF QUANTITIES

SCALE: SHEET 5 OF 5 SHEETS STA. TO STA.

F.A.S. RTE.	SECTION	COUNTY	TOTAL SHEETS	SHEET NO.
2937	116B-1	PULASKI	76	17
		CONTRACT NO. 78793		
	ILLINOIS	FED. AID PROJECT		

EX CURVE
PI STA = 72+55.36
Δ = 24°52'40" (LT)
D = 02°30'00"
R = 2,291.83'
T = 505.52'
L = 995.11'
E = 55.09'
e = SEE PAVEMENT SLOPE ON SHEET 13
PC STA = 67+49.84
PT STA = 77+44.95

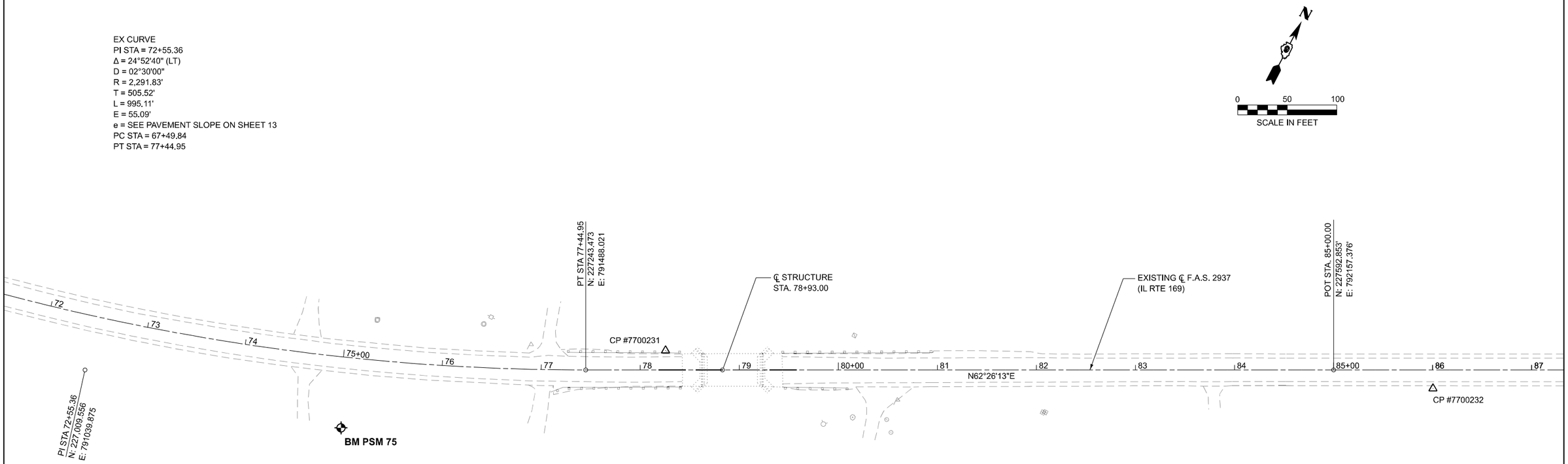

	ELEVATION	STATION	OFFSET	NORTHING	EASTING	DESCRIPTION
BENCHMARK						
PSM 75	341.535	75+04.95 R2	71.42' RT.	227077.336	791296.092	IDOT MON @ STA. 75+00, 72' RT. ON IL 169
CONTROL POINT						
7700231	341.942	78+25.52 R2	19.66' LT.	227298.187	791550.347	IRON PIPE AND CAP SET
7700232	340.391	86+00.36 R2	18.63' RT.	227622.774	792254.970	IRON PIPE AND CAP SET

MODEL: SH-IL169 - AlignPlan01
FILE NAME: ...\Sheet\D978793-sht-ATB.dgn

CMT
License No. 184-000613

USER NAME = Matt Overbey	DESIGNED - AJ	REVISED -
	DRAWN - RAH	REVISED -
	CHECKED - MJO	REVISED -
PLOT DATE = 6/26/2025	DATE - 6/26/2025	REVISED -

STATE OF ILLINOIS
DEPARTMENT OF TRANSPORTATION

F.A.S. 2937 (ILLINOIS ROUTE 169)
ALIGNMENT, TIES AND BENCHMARKS

SCALE: 1"=50' | SHEET 1 OF 1 SHEETS | STA. 70+00.00 R2 TO STA. 85+00.00 R2

F.A.S. RTE.	SECTION	COUNTY	TOTAL SHEETS	SHEET NO.
2937	116B-1	PULASKI	76	18
		CONTRACT NO. 78793		
		ILLINOIS	FED. AID PROJECT	

EX CURVE
PI STA = 72+55.36
Δ = 24°52'40" (LT)
D = 02°30'00"
R = 2,291.83'
T = 505.52'
L = 995.11'
E = 55.09'
e = ____
PC STA = 67+49.84
PT STA = 77+44.95

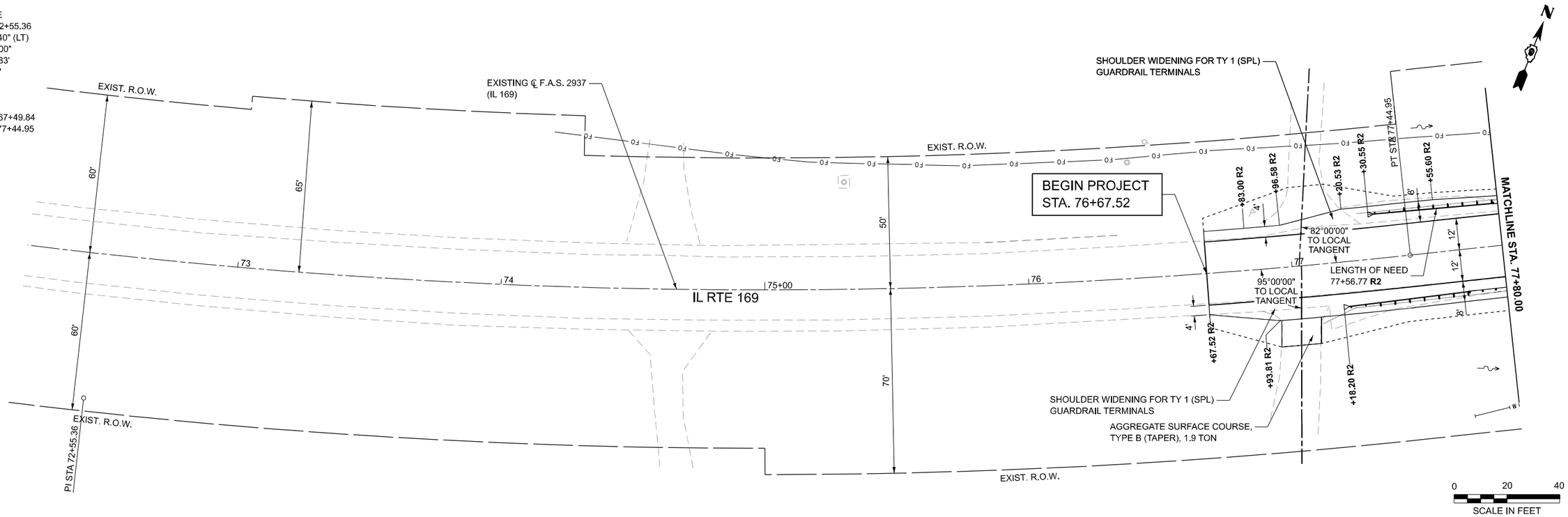

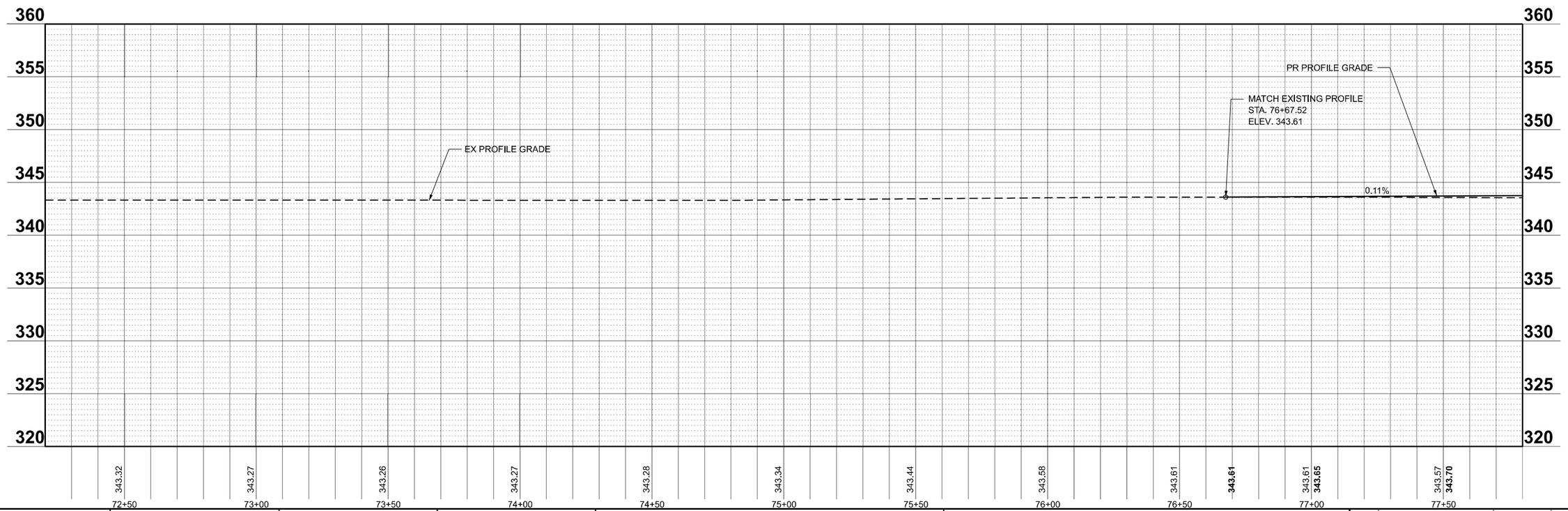

MODEL: SH-IL169 - IL169-Plan01
FILE NAME: ...\Sheet\D976793-sht-lnprf.dgn

CMT
License No. 184-000613 © Copyright CMT, Inc.

USER NAME = Matt Overbey	DESIGNED - AJ	REVISED -	
	DRAWN - RAH	REVISED -	
	CHECKED - MJO	REVISED -	
PLOT DATE = 6/26/2025	DATE - 6/26/2025	REVISED -	

STATE OF ILLINOIS
DEPARTMENT OF TRANSPORTATION

F.A.S. 2937 (ILLINOIS ROUTE 169)
PLAN AND PROFILE SHEET

SCALE: 1"=20' | SHEET 1 OF 3 SHEETS | STA. 72+20.00 R2 TO STA. 77+80.00 R2

F.A.S. RTE.	SECTION	COUNTY	TOTAL SHEETS	SHEET NO.
2937	116B-1	PULASKI	76	19
		CONTRACT NO. 78793		
		ILLINOIS	FED. AID PROJECT	

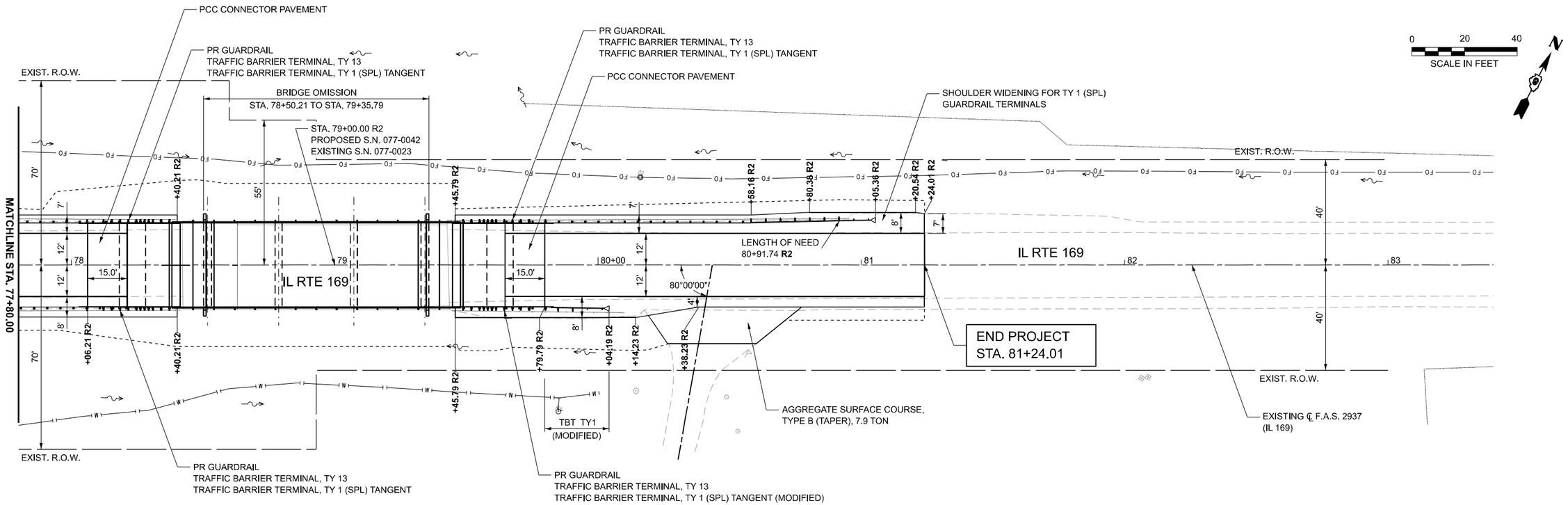

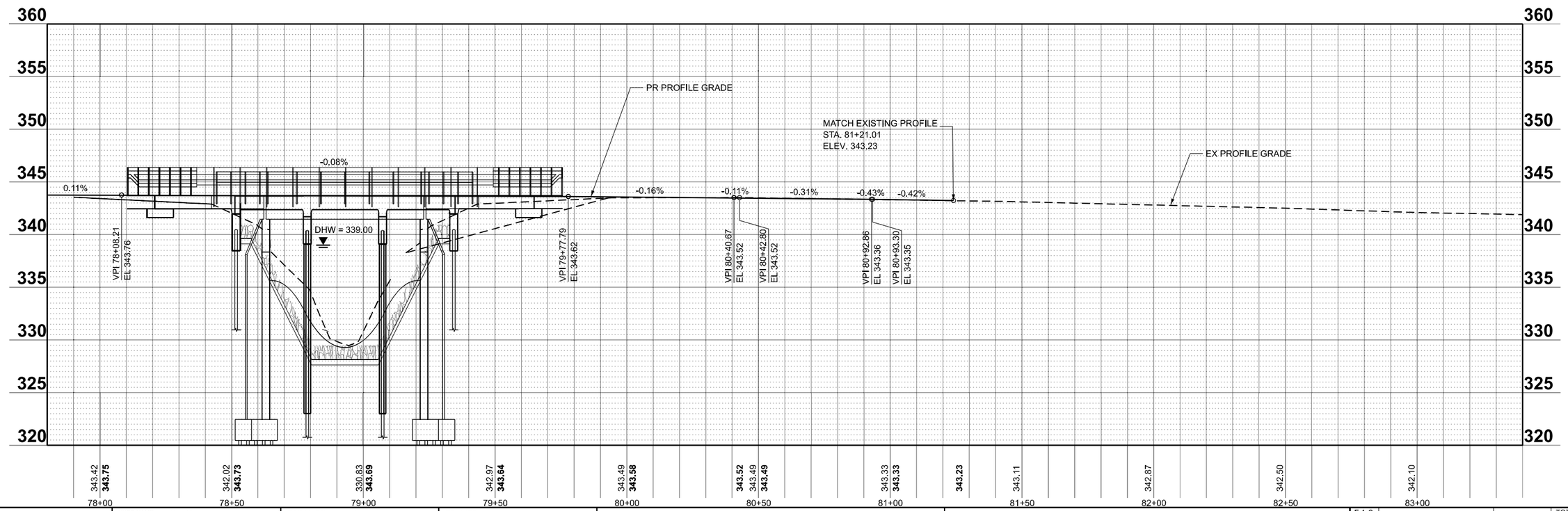

MODEL: SH-IL169 - IL169-Plan02
FILE NAME: ...\Sheet\D976793-sht-lnprf.dgn

CMT
License No. 184-000613 © Copyright CMT, Inc.

USER NAME = Matt Overbey	DESIGNED - AJ	REVISED -	
	DRAWN - RAH	REVISED -	
	CHECKED - MJO	REVISED -	
PLOT DATE = 6/26/2025	DATE - 6/26/2025	REVISED -	

STATE OF ILLINOIS
DEPARTMENT OF TRANSPORTATION

F.A.S. 2937 (ILLINOIS ROUTE 169)
PLAN AND PROFILE SHEET

SCALE: 1"=20' | SHEET 2 OF 3 SHEETS | STA. 77+80.00 R2 TO STA. 83+40.00 R2

F.A.S. RTE.	SECTION	COUNTY	TOTAL SHEETS	SHEET NO.
2937	116B-1	PULASKI	76	20
		CONTRACT NO. 78793		
		ILLINOIS	FED. AID PROJECT	

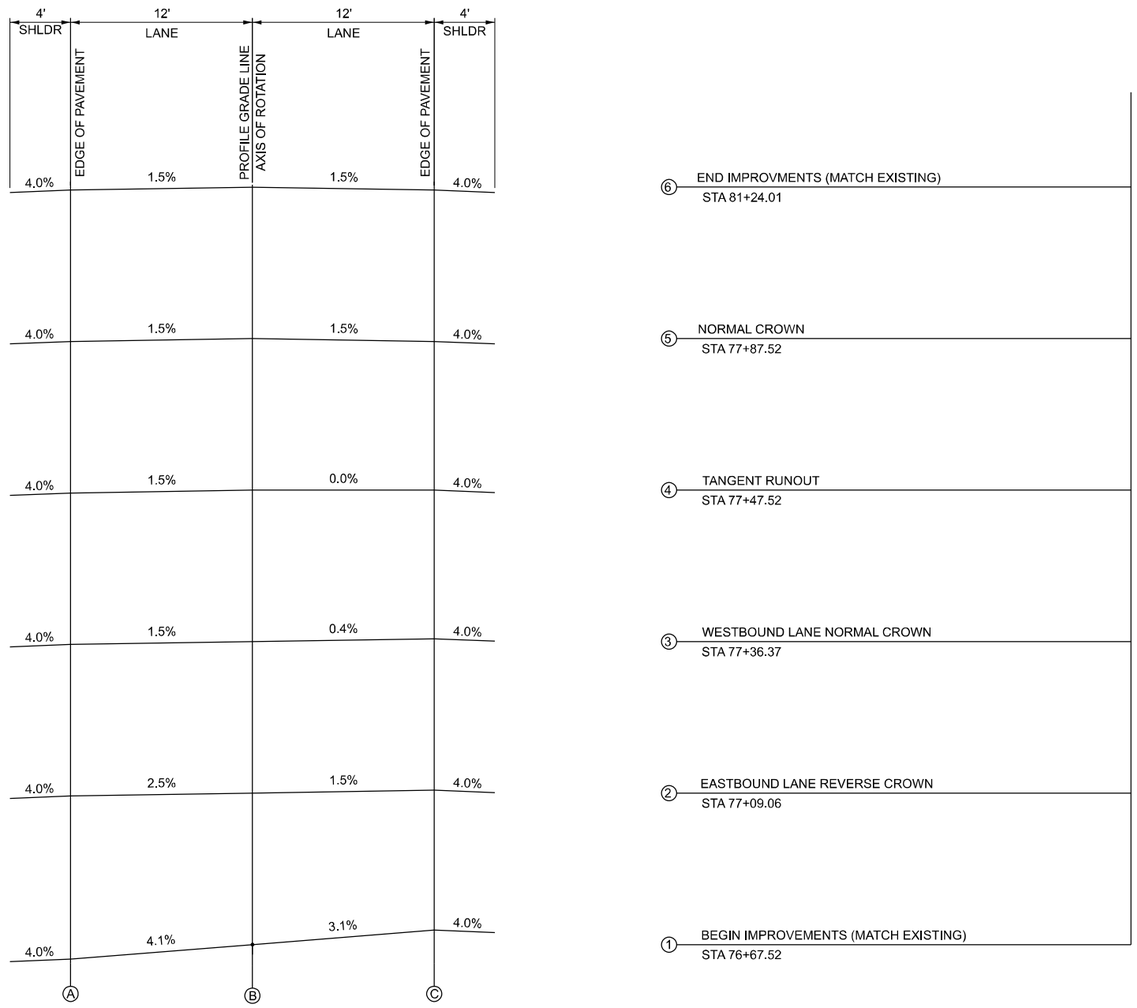

STATION	SECTION	ELEVATION AT LOCATION		
		A	B	C
76+67.52	1	342.77	343.26	343.63
77+09.06	2	343.36	343.66	343.84
77+36.37	3	343.51	343.69	343.74
77+47.52	4	343.52	343.70	343.70
77+87.52	5	343.56	343.74	343.56
81+24.01	6	343.05	343.23	343.05

MODEL: Superelevation Detail [Sheet]
FILE NAME: ...D978793-sht-detail_super.dgn

CMT
License No. 184-000613

USER NAME = Matt Overbey	DESIGNED - AJ	REVISED -
	DRAWN - RAH	REVISED -
	CHECKED - MJO	REVISED -
PLOT DATE = 6/26/2025	DATE - 6/26/2025	REVISED -

STATE OF ILLINOIS
DEPARTMENT OF TRANSPORTATION

F.A.S. 2937 (ILLINOIS ROUTE 169)
SUPERELEVATION TRANSITION DETAIL

SCALE: | SHEET 1 OF 2 SHEETS | STA. | TO STA.

F.A.S. RTE.	SECTION	COUNTY	TOTAL SHEETS	SHEET NO.
2937	116B-1	PULASKI	76	21

CONTRACT NO. 78793

ILLINOIS | FED. AID PROJECT

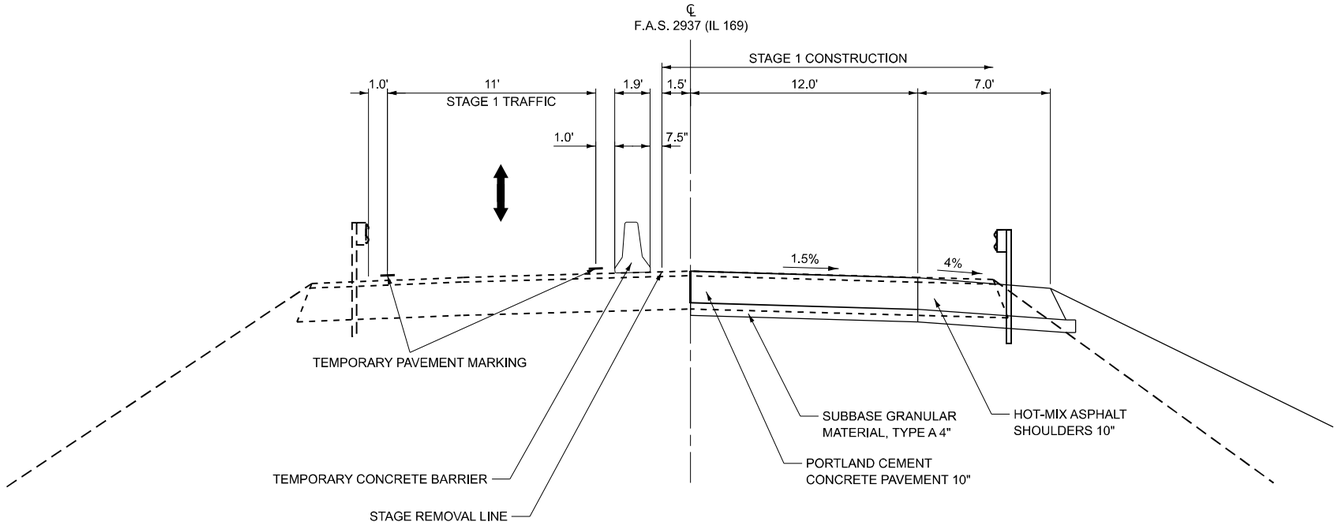

STAGE 1 CONSTRUCTION
(LOOKING EAST)

STAGE 1 CONSTRUCTION

PHASE 1

1. UTILIZE TRAFFIC CONTROL AND PROTECTION, STANDARD 701201 AND 701321.
2. PLACE TEMPORARY TRAFFIC CONTROL AS SHOWN ON THE DETAILS.
3. INSTALL TEMPORARY TRAFFIC SIGNALS PRIOR TO CLOSING THE EASTBOUND LANE OF THE ROADWAY. SEE "TRAFFIC CONTROL NOTES" FOR MORE DETAILS.

PHASE 2

4. UTILIZE TRAFFIC CONTROL AND PROTECTION, STANDARD 701321 TO DIRECT TRAFFIC TO THE WESTBOUND SIDE OF IL 169. CONSTRUCT TEMPORARY SHEET PILING AT THE EAST AND WEST SIDE OF THE EXISTING STRUCTURE. REMOVE THE EASTBOUND SIDE OF THE STRUCTURE.
5. CONSTRUCT THE EASTBOUND SIDE OF THE BRIDGE STRUCTURE, EMBANKMENT AT EAST AND WEST SIDES OF THE PROPOSED STRUCTURE, AND APPROACH PAVEMENT.

TRAFFIC CONTROL NOTES

1. THE CONTRACTOR WILL HAVE THE OPTION TO USE MICROWAVE DETECTION FOR USE WITH THE TEMPORARY TRAFFIC SIGNALS IN ACCORDANCE WITH HIGHWAY STANDARD 701321.
2. ALL TEMPORARY PAVEMENT MARKINGS, DRUMS, ETC. SHALL BE PLACED PRIOR TO PLACING TEMPORARY CONCRETE BARRIERS.

WIDE LOAD SIGN

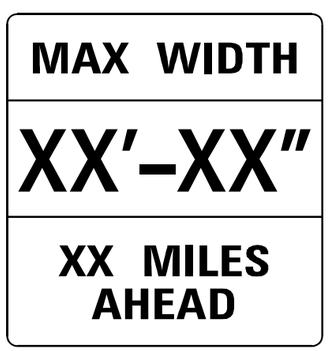

W12–I103 (48 X 48)

SERIES D ALPHABET, NO BORDER, BLACK ON WHITE

NOTES FOR WIDE LOAD SIGN

THE CONTRACTOR SHALL FURNISH THE POST AND ERECT THE SIGN AT THE NECESSARY LOCATION AS DIRECTED BY THE ENGINEER. THE SIGN SHALL BE POST MOUNTED.

THE ABOVE NOTED WORK, INCLUDING SIGNS, POSTS, HARDWARE, AND LABOR SHALL BE INCLUDED IN THE CONTRACT UNIT PRICE, EACH, FOR TRAFFIC CONTROL AND PROTECTION, STANDARD 701321, AND NO OTHER COMPENSATION WILL BE ALLOWED.

FOR WORK ON ALL STRUCTURES, THE WIDTH SHOWN ON THE W12-I103 SIGN SHALL BE XX'-X" OR DIRECTED BY THE ENGINEER. THE "X" MILES AHEAD WILL BE DETERMINED BY THE ENGINEER.

NOTES FOR TRAFFIC CONTROL & PROTECTION STANDARD 701321

ALL ITEMS BELOW SHALL BE INCLUDED IN THE CONTRACT UNIT PRICE, EACH FOR TRAFFIC CONTROL AND PROTECTION, STANDARD 701321, NO OTHER COMPENSATION WILL BE ALLOWED.

1. ALL SIGNAGE AS SHOWN ON THE HIGHWAY STANDARD AND ADDITIONAL SIGNAGE SHOWN ON THE STAGE 1 DETAIL. THE NOTED WORK SHALL INCLUDE SIGNS, POSTS, HARDWARE AND LABOR. THE CONTRACTOR SHALL ERECT THE SIGNS AT THE LOCATIONS ON THE DETAIL AND AT LOCATIONS DIRECTED BY THE ENGINEER.
2. PER ARTICLE 703.07, WHEN TEMPORARY PAVEMENT MARKING IS SHOWN ON THE STANDARD AND DETAIL. THE COST OF TEMPORARY PAVEMENT MARKING AND ITS REMOVAL WILL BE INCLUDED IN THE COST OF THE STANDARD.
3. ALL TEMPORARY DRUMS OR BARRICADES SHOWN ON THE HIGHWAY STANDARD AND AS SHOWN ON THE DETAIL.

MODEL: IL169 - STG Plan1 [Sheet]
FILE NAME: ...\D978793-sht-staging-1.dgn

EX CURVE
PI STA = 72+55.36
Δ = 24°52'40" (LT)
D = 02°30'00"
R = 2,291.83'
T = 505.52'
L = 995.11'
E = 55.09'
e = ____
PC STA = 67+49.84
PT STA = 77+44.95

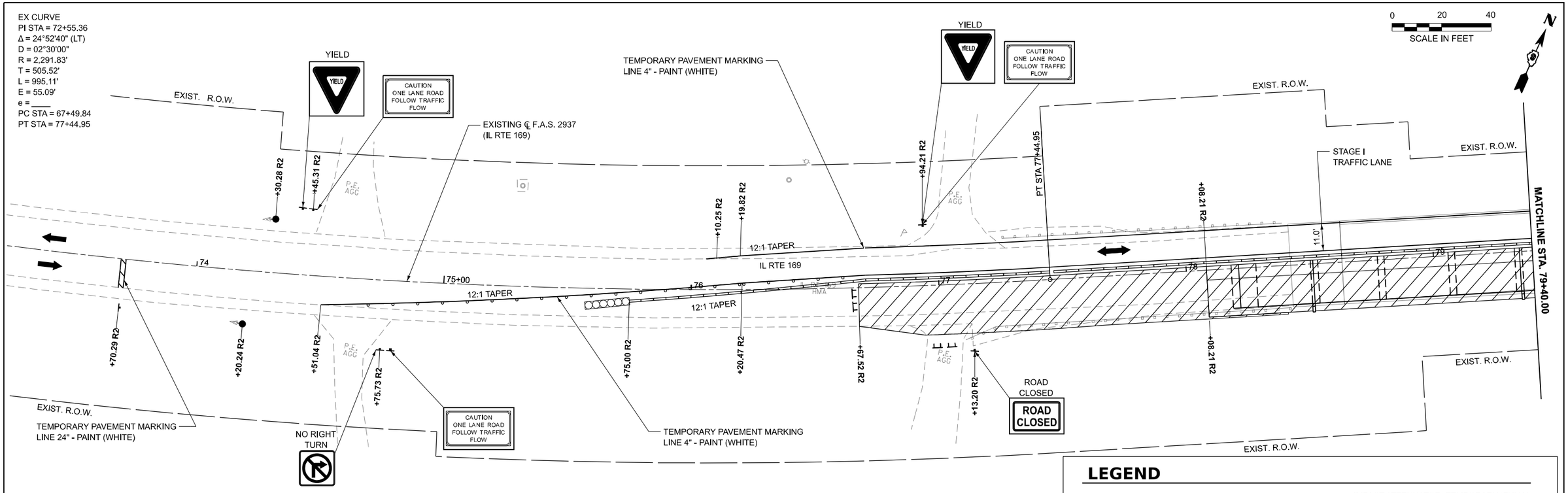

0 20 40
SCALE IN FEET

LEGEND

	WORK ZONE		IMPACT ATTENUATOR, TEMPORARY (FULLY REDIRECTIVE, NARROW), TEST LEVEL 3
	EDGE DRUMS		TEMPORARY CONCRETE BARRIER
	TEMPORARY SIGN		TEMPORARY TRAFFIC SIGNAL
	BARREL		TYPE III BARRICADE

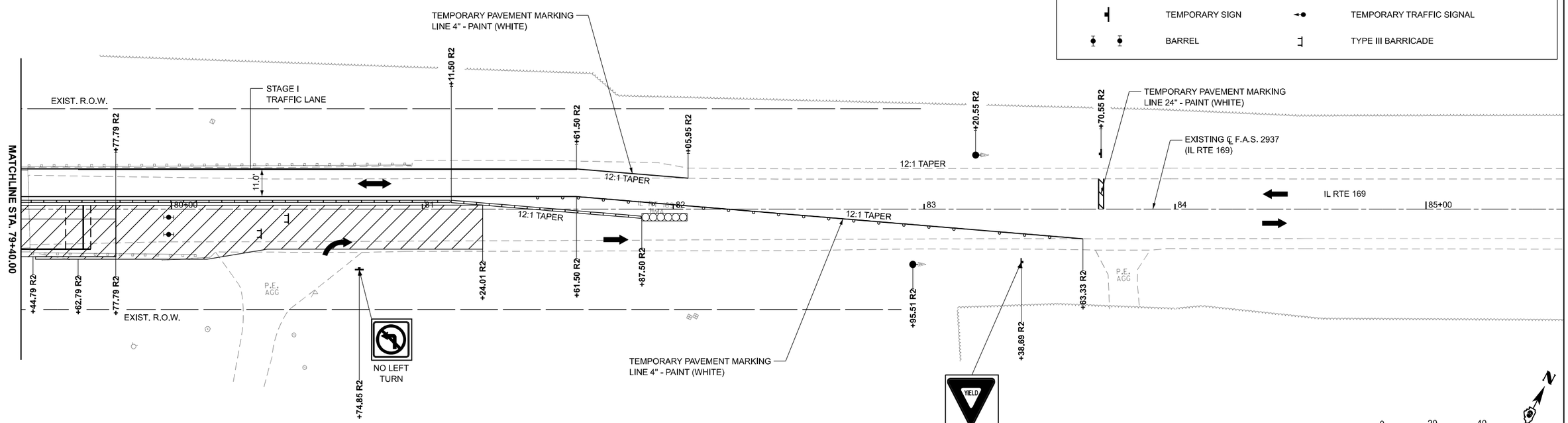

0 20 40
SCALE IN FEET

MODEL: SH-L170 - STG Plan02 [Sheet]
FILE NAME: ...D978793-sh-staging-1.dgn

CMT
License No. 184-000613 © Copyright CMT, Inc.

USER NAME = Matt Overbey	DESIGNED - AJ	REVISED -	
	DRAWN - RAH	REVISED -	
	CHECKED - MJO	REVISED -	
PLOT DATE = 6/26/2025	DATE - 6/26/2025	REVISED -	

STATE OF ILLINOIS
DEPARTMENT OF TRANSPORTATION

F.A.S. 2937 (ILLINOIS ROUTE 169)
MAINTENANCE OF TRAFFIC - STAGE I

SCALE: 1"=20' | SHEET 2 OF 2 SHEETS | STA. 73+40.00 R2 TO STA. 85+40.00 R2

F.A.S. RTE.	SECTION	COUNTY	TOTAL SHEETS	SHEET NO.
2937	116B-1	PULASKI	76	23
		CONTRACT NO. 78793		
		ILLINOIS	FED. AID PROJECT	

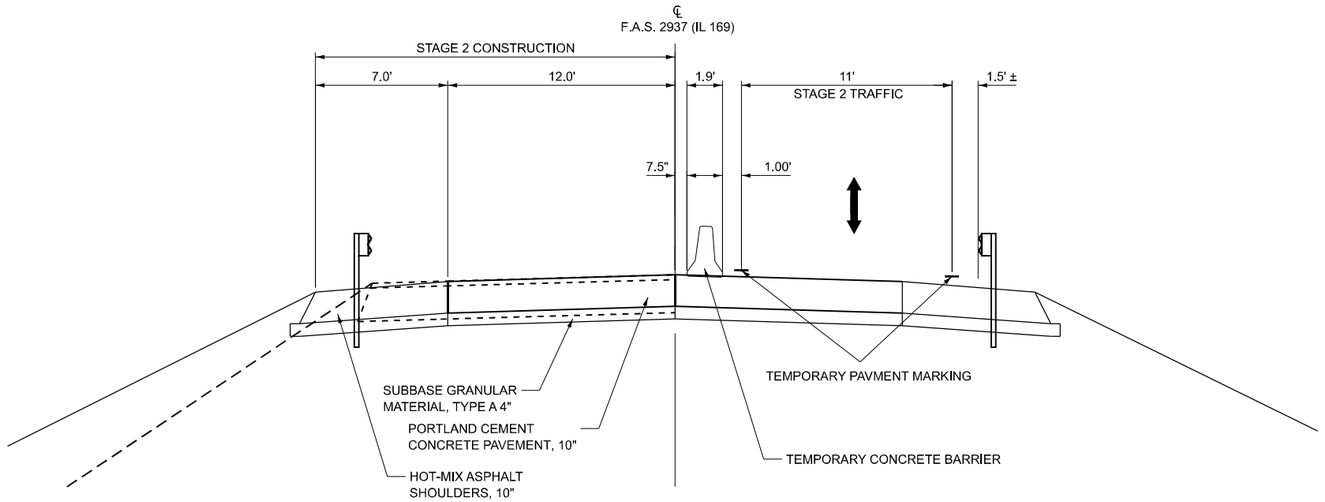

STAGE 2 CONSTRUCTION
(LOOKING EAST)

STAGE 2 CONSTRUCTION

PHASE 1

1. UTILIZE TRAFFIC CONTROL AND PROTECTION, STANDARD 701201 AND 701321.
2. PLACE TEMPORARY TRAFFIC CONTROL AS SHOWN ON THE DETAILS.
3. INSTALL TEMPORARY TRAFFIC SIGNALS PRIOR TO CLOSING THE EASTBOUND LANE OF THE ROADWAY. SEE "TRAFFIC CONTROL NOTES" FOR MORE DETAILS.

PHASE 2

4. UTILIZE TRAFFIC CONTROL AND PROTECTION, STANDARD 701321 TO DIRECT TRAFFIC TO THE WESTBOUND SIDE OF IL 169. CONSTRUCT TEMPORARY SHEET PILING AT THE EAST AND WEST SIDE OF THE EXISTING STRUCTURE. REMOVE THE EASTBOUND SIDE OF THE STRUCTURE.
5. CONSTRUCT THE EASTBOUND SIDE OF THE BRIDGE STRUCTURE, EMBANKMENT AT EAST AND WEST SIDES OF THE PROPOSED STRUCTURE, AND APPROACH PAVEMENT.

TRAFFIC CONTROL NOTES

1. THE CONTRACTOR WILL HAVE THE OPTION TO USE MICROWAVE DETECTION FOR USE WITH THE TEMPORARY TRAFFIC SIGNALS IN ACCORDANCE WITH HIGHWAY STANDARD 701321.
2. ALL TEMPORARY PAVEMENT MARKINGS, DRUMS, ETC. SHALL BE PLACED PRIOR TO PLACING TEMPORARY CONCRETE BARRIERS.

WIDE LOAD SIGN

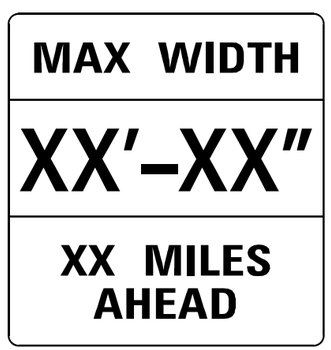

W12–I103 (48 X 48)

SERIES D ALPHABET, NO BORDER, BLACK ON WHITE

NOTES FOR WIDE LOAD SIGN

THE CONTRACTOR SHALL FURNISH THE POST AND ERECT THE SIGN AT THE NECESSARY LOCATION AS DIRECTED BY THE ENGINEER. THE SIGN SHALL BE POST MOUNTED.

THE ABOVE NOTED WORK, INCLUDING SIGNS, POSTS, HARDWARE, AND LABOR SHALL BE INCLUDED IN THE CONTRACT UNIT PRICE, EACH, FOR TRAFFIC CONTROL AND PROTECTION, STANDARD 701321, AND NO OTHER COMPENSATION WILL BE ALLOWED.

FOR WORK ON ALL STRUCTURES, THE WIDTH SHOWN ON THE W12-I103 SIGN SHALL BE XX'-X" OR DIRECTED BY THE ENGINEER. THE "X" MILES AHEAD WILL BE DETERMINED BY THE ENGINEER.

NOTES FOR TRAFFIC CONTROL & PROTECTION STANDARD 701321

ALL ITEMS BELOW SHALL BE INCLUDED IN THE CONTRACT UNIT PRICE, EACH FOR TRAFFIC CONTROL AND PROTECTION, STANDARD 701321, NO OTHER COMPENSATION WILL BE ALLOWED.

1. ALL SIGNAGE AS SHOWN ON THE HIGHWAY STANDARD AND ADDITIONAL SIGNAGE SHOWN ON THE STAGE 2 DETAIL. THE NOTED WORK SHALL INCLUDE SIGNS, POSTS, HARDWARE AND LABOR. THE CONTRACTOR SHALL ERECT THE SIGNS AT THE LOCATIONS ON THE DETAIL AND AT LOCATIONS DIRECTED BY THE ENGINEER.
2. PER ARTICLE 703.07, WHEN TEMPORARY PAVEMENT MARKING IS SHOWN ON THE STANDARD AND DETAIL. THE COST OF TEMPORARY PAVEMENT MARKING AND ITS REMOVAL WILL BE INCLUDED IN THE COST OF THE STANDARD.
3. ALL TEMPORARY DRUMS OR BARRICADES SHOWN ON THE HIGHWAY STANDARD AND AS SHOWN ON THE DETAIL.

MODEL: IL169 - STG Plan1 [Sheet]
FILE NAME: ...\D978793-sht-staging-2.dgn

EX CURVE
PI STA = 72+55.36
Δ = 24°52'40" (LT)
D = 02°30'00"
R = 2,291.83'
T = 505.52'
L = 995.11'
E = 55.09'
e = ____
PC STA = 67+49.84
PT STA = 77+44.95

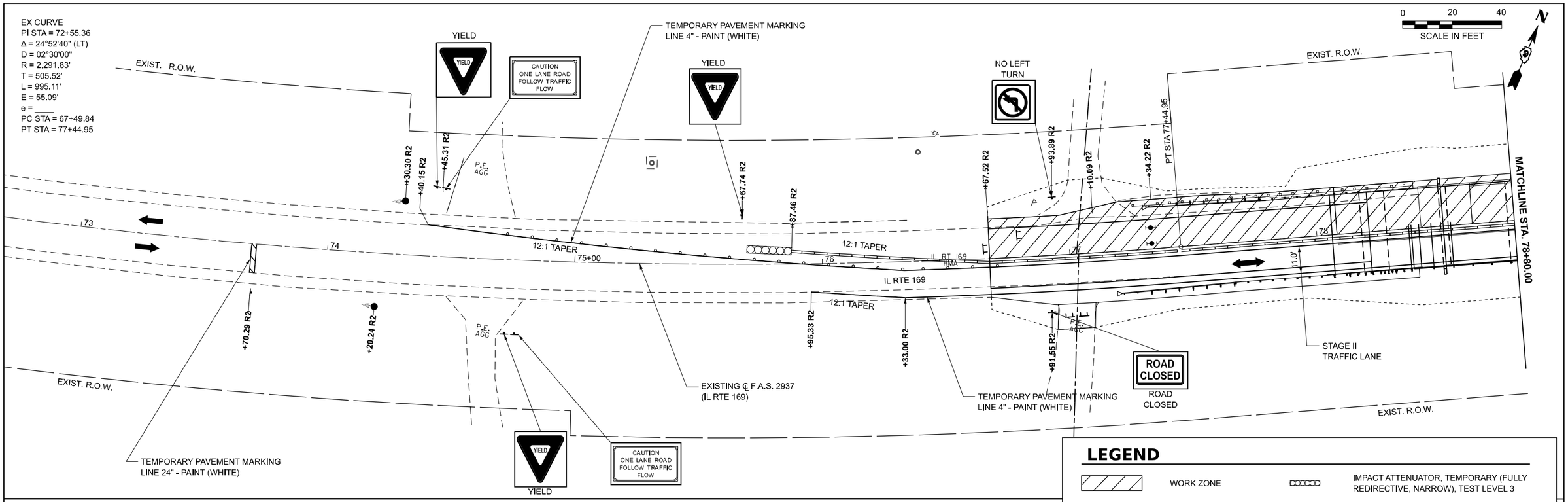

LEGEND

	WORK ZONE		IMPACT ATTENUATOR, TEMPORARY (FULLY REDIRECTIVE, NARROW), TEST LEVEL 3
	EDGE DRUMS		TEMPORARY CONCRETE BARRIER
	TEMPORARY SIGN		TEMPORARY TRAFFIC SIGNAL
	BARREL		TYPE III BARRICADE

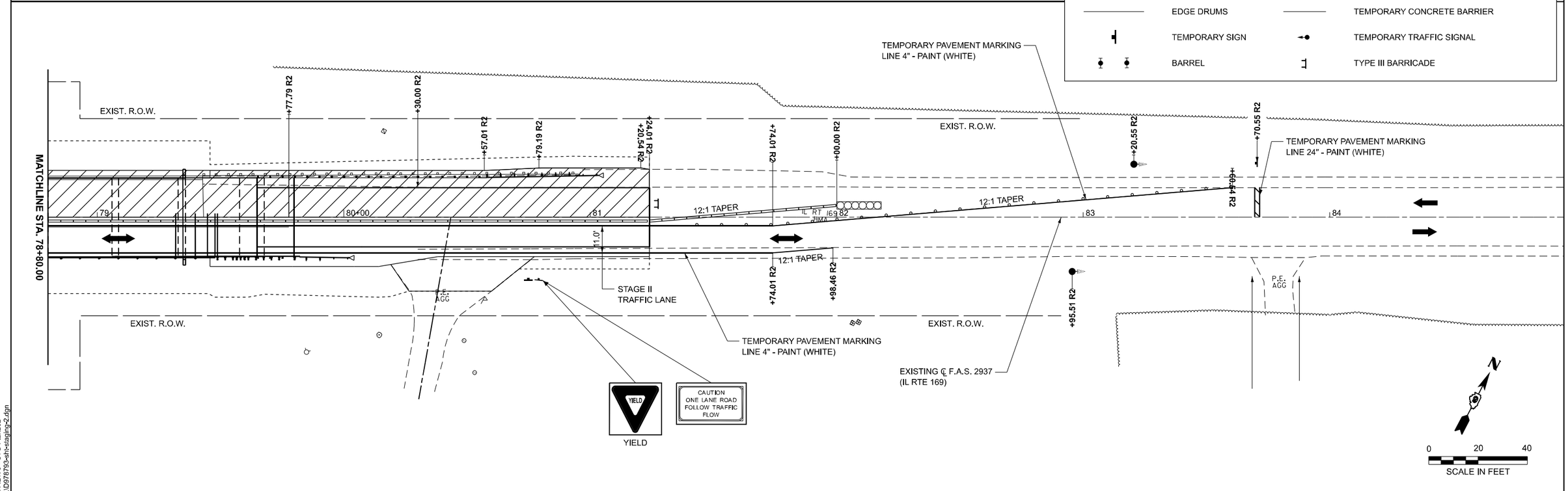

MODEL: SH-IL170 - STG Plan202
FILE NAME: ...ID978793-sht-staging-2.dgn

CMT
License No. 184-000613 © Copyright CMT, Inc.

USER NAME = Matt Overbey	DESIGNED - AJ	REVISED -	
	DRAWN - RAH	REVISED -	
	CHECKED - MJO	REVISED -	
PLOT DATE = 6/26/2025	DATE - 6/26/2025	REVISED -	

STATE OF ILLINOIS
DEPARTMENT OF TRANSPORTATION

F.A.S. 2937 (ILLINOIS ROUTE 169)
MAINTENANCE OF TRAFFIC - STAGE II

SCALE: 1"=20' | SHEET 2 OF 2 SHEETS | STA. 72+80.00 R2 TO STA. 84+80.00 R2

F.A.S. RTE.	SECTION	COUNTY	TOTAL SHEETS	SHEET NO.
2937	116B-1	PULASKI	76	25
		CONTRACT NO. 78793		
	ILLINOIS	FED. AID PROJECT		

EX CURVE
PI STA = 72+55.36
Δ = 24°52'40" (LT)
D = 02°30'00"
R = 2,291.83'
T = 505.52'
L = 995.11'
E = 55.09'
e = ____
PC STA = 67+49.84
PT STA = 77+44.95

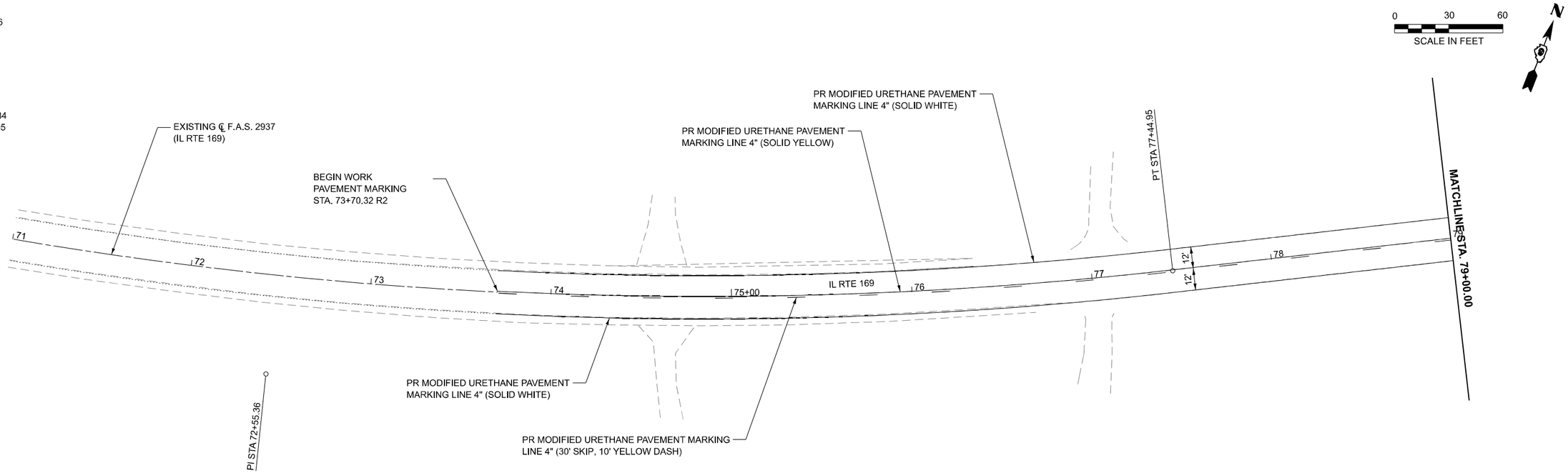

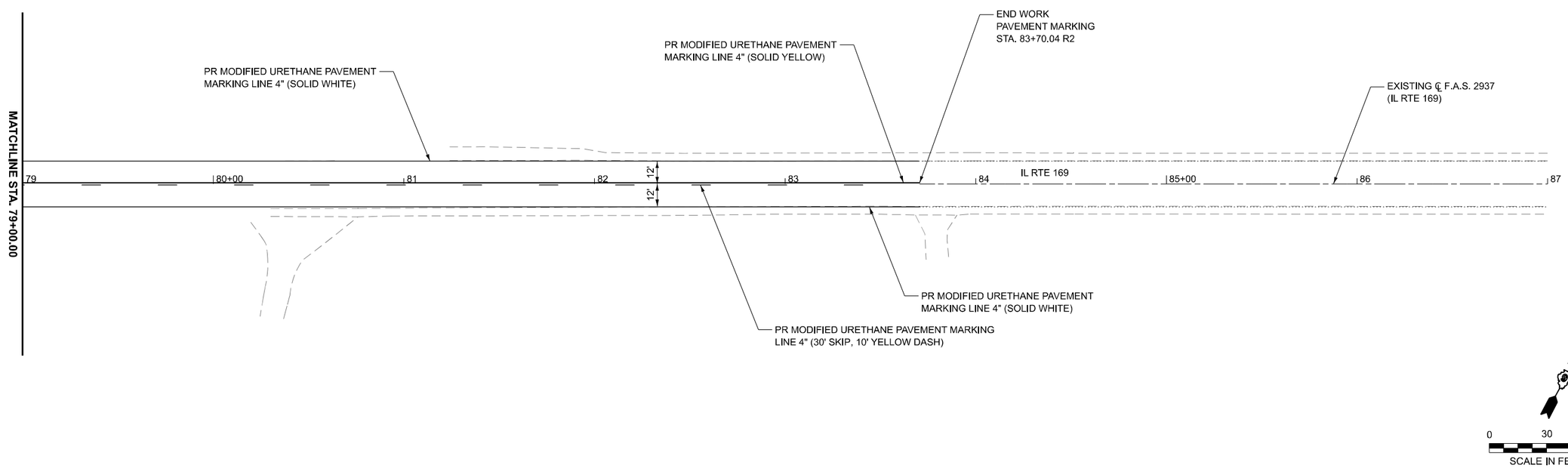

MODEL: SH-IL170 - IL169-PMK01
FILE NAME: ...\Sheet\D978793-sht-pmk.dgn

CMT
License No. 184-000613 © Copyright CMT, Inc.

USER NAME = Matt Overbey	DESIGNED - AJ	REVISED -	
	DRAWN - RAH	REVISED -	
	CHECKED - MJO	REVISED -	
PLOT DATE = 6/26/2025	DATE - 6/26/2025	REVISED -	

STATE OF ILLINOIS
DEPARTMENT OF TRANSPORTATION

F.A.S. 2937 (ILLINOIS ROUTE 169)
PAVEMENT MARKING PLANS

SCALE: 1"=30' | SHEET 1 OF 1 SHEETS | STA. 71+00.00 R2 TO STA. 87+00.00 R2

F.A.S. RTE.	SECTION	COUNTY	TOTAL SHEETS	SHEET NO.
2937	116B-1	PULASKI	76	26
		CONTRACT NO. 78793		
	ILLINOIS	FED. AID PROJECT		

EX CURVE
PI STA = 72+55.36
Δ = 24°52'40" (LT)
D = 02°30'00"
R = 2,291.83'
T = 505.52'
L = 995.11'
E = 55.09'
e = ____
PC STA = 67+49.84
PT STA = 77+44.95

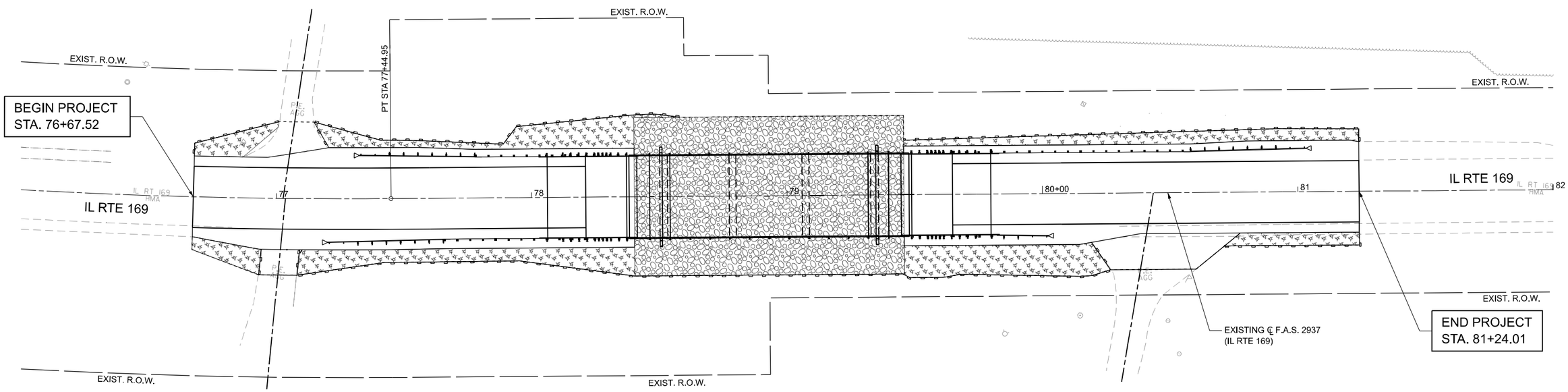

LEGEND

	EROSION CONTROL PERIMETER BARRIER		SEEDING, CLASS 2A WITH MULCH, METHOD 2
	TEMPORARY DITCH CHECK		STONE RIPRAP, CLASS A4

MODEL: SH-IL170 - ErosPln11
FILE NAME: ...\Sheet\D978793-sht-eros.dgn

CMT
License No. 184-000613
© Copyright CMT, Inc.

USER NAME = Matt Overbey	DESIGNED - AJ	REVISED -	
	DRAWN - RAH	REVISED -	
	CHECKED - MJO	REVISED -	
PLOT DATE = 6/26/2025	DATE - 6/26/2025	REVISED -	

STATE OF ILLINOIS
DEPARTMENT OF TRANSPORTATION

F.A.S. 2937 (ILLINOIS ROUTE 169)
EROSION CONTROL PLANS

SCALE: 1"=20' | SHEET 1 OF 1 SHEETS | STA. 76+00.00 R2 TO STA. 82+00.00 R2

F.A.S. RTE.	SECTION	COUNTY	TOTAL SHEETS	SHEET NO.
2937	116B-1	PULASKI	76	27
		CONTRACT NO. 78793		
		ILLINOIS	FED. AID PROJECT	

EX CURVE
PI STA = 72+55.36
Δ = 24°52'40" (LT)
D = 02°30'00"
R = 2,291.83'
T = 505.52'
L = 995.11'
E = 55.09'
e = ____
PC STA = 67+49.84
PT STA = 77+44.95

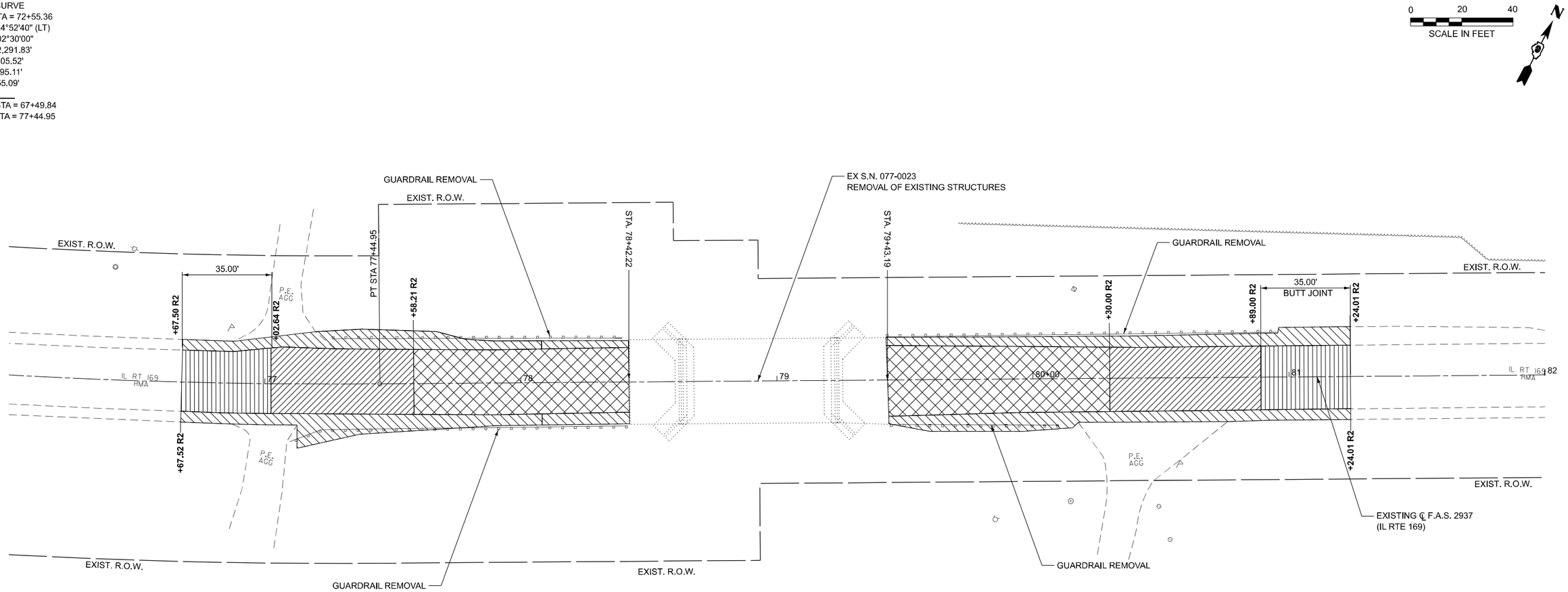

LEGEND

- PAVEMENT REMOVAL
- HMA SURFACE REMOVAL - 1 ½"
- HMA SURFACE REMOVAL - BUTT JOINT
- PAVED SHOULDER REMOVAL

MODEL: SH-IL170 - removal 20sc11
FILE NAME: ...\Sheet\D978793-sht-removal.dgn

CMT
License No. 184-000613
© Copyright CMT, Inc.

USER NAME = Matt Overbey	DESIGNED - AJ	REVISED -	
	DRAWN - RAH	REVISED -	
	CHECKED - MJO	REVISED -	
PLOT DATE = 6/26/2025	DATE - 6/26/2025	REVISED -	

STATE OF ILLINOIS
DEPARTMENT OF TRANSPORTATION

F.A.S. 2937 (ILLINOIS ROUTE 169)
REMOVAL PLANS

SCALE: 1"=20' | SHEET 1 OF 1 SHEETS | STA. 76+00.00 R2 TO STA. 82+00.00 R2

F.A.S. RTE.	SECTION	COUNTY	TOTAL SHEETS	SHEET NO.
2937	116B-1	PULASKI	76	28
		CONTRACT NO. 78793		
	ILLINOIS	FED. AID PROJECT		

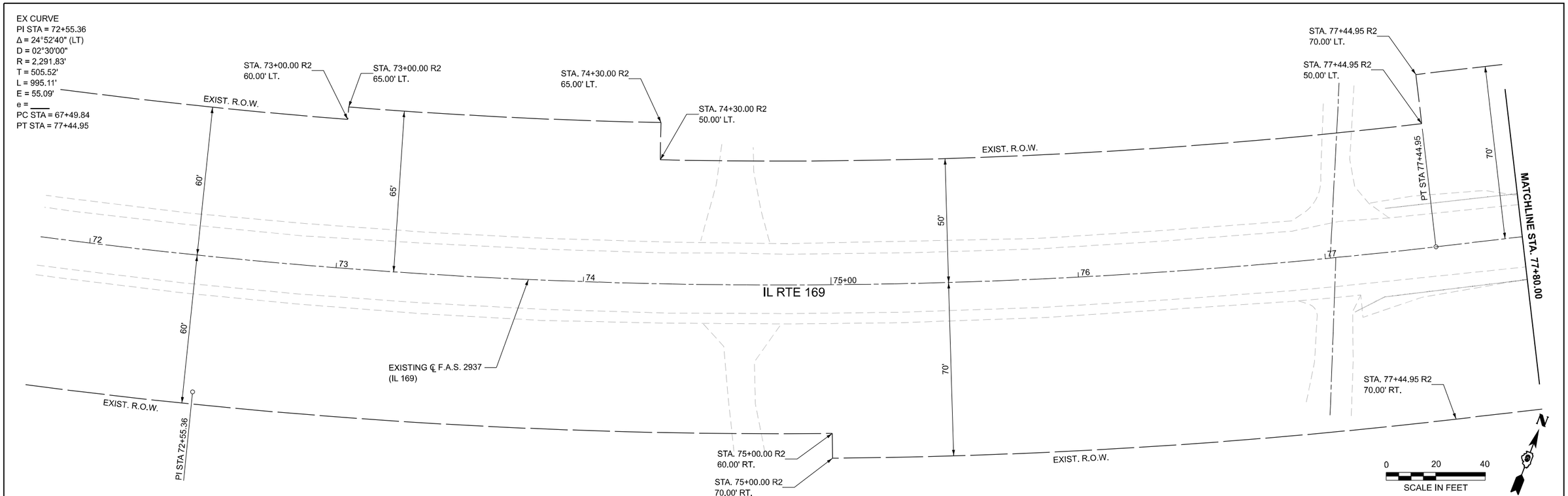

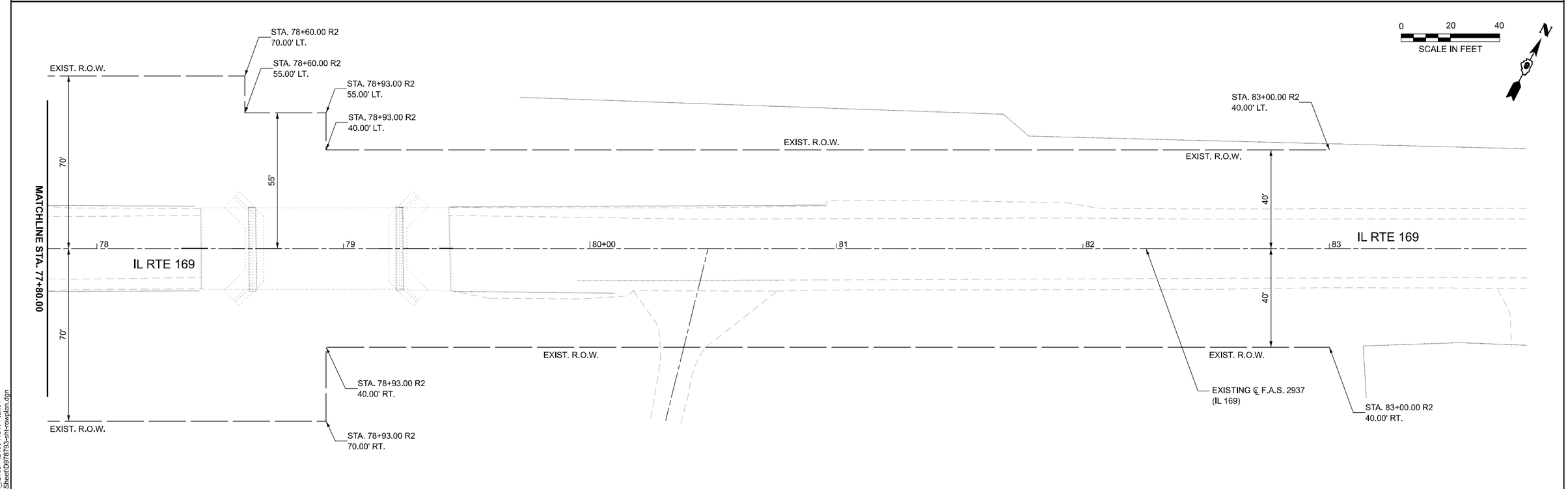

MODEL: SH_IL169 - IL169 ROW Plan01
FILE NAME: ...\Sheet\D978793-sht-rowplan.dgn

CMT
License No. 184-000613
© Copyright CMT, Inc.

USER NAME = Matt Overbey	DESIGNED - AJ	REVISED -	
	DRAWN - RAH	REVISED -	
	CHECKED - MJO	REVISED -	
PLOT DATE = 6/26/2025	DATE - 6/26/2025	REVISED -	

STATE OF ILLINOIS
DEPARTMENT OF TRANSPORTATION

F.A.S. 2937 (ILLINOIS ROUTE 169)
EXISTING RIGHT-OF-WAY PLANS

SCALE: 1"=20' | SHEET 1 OF 1 SHEETS | STA. 71+80.00 R2 TO STA. 83+80.00 R2

F.A.S. RTE.	SECTION	COUNTY	TOTAL SHEETS	SHEET NO.
2937	116B-1	PULASKI	76	29
		CONTRACT NO. 78793		
	ILLINOIS	FED. AID PROJECT		

Benchmark: IDOT placed pin and cap set northwest of structure 077-0023 along IL Rt. 169, Sta. 78+25.52 R2, 19.66' Lt., Elevation = 341.942'

Existing Structure: SN 077-0023 was originally built in 1933 on SBI Route 147 under Section 116. The structure is a single span bridge with closed abutments on untreated timber piles with an overall length of 59'-6" from back to back of abutments. The superstructure was originally a steel truss and in 1984 under Section 116BR-1 the superstructure was replaced with PPC deck beams and a 1¾" bituminous concrete overlay. The width of the structure is 33'-0" out-to-out deck. The structure is to be removed and replaced utilizing staged construction.

No Salvage.

DESIGN SPECIFICATIONS

2020 AASHTO LRFD Bridge Design Specifications 9th Edition

DESIGN STRESSES

FIELD UNITS

f'c = 4,000 psi (Superstructure Concrete)
f'c = 3,500 psi (Substructure Concrete)
fy = 60,000 psi (Reinforcement)

LOADING HL-93

Allow 50 #/sq. ft. for future wearing surface

SEISMIC DATA

2023 AASHTO Seismic Hazard
Seismic Design Category (SDC) = C
Design Spectral Acceleration at 1.0 sec. (SD1) = 0.603g
Soil Site Class = DE
Performance Level = Operational
Latitude = 37.29° N Longitude = 89.00° W

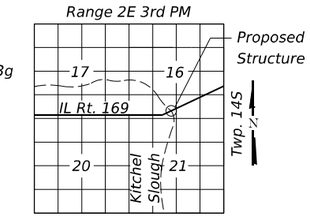

LOCATION SKETCH

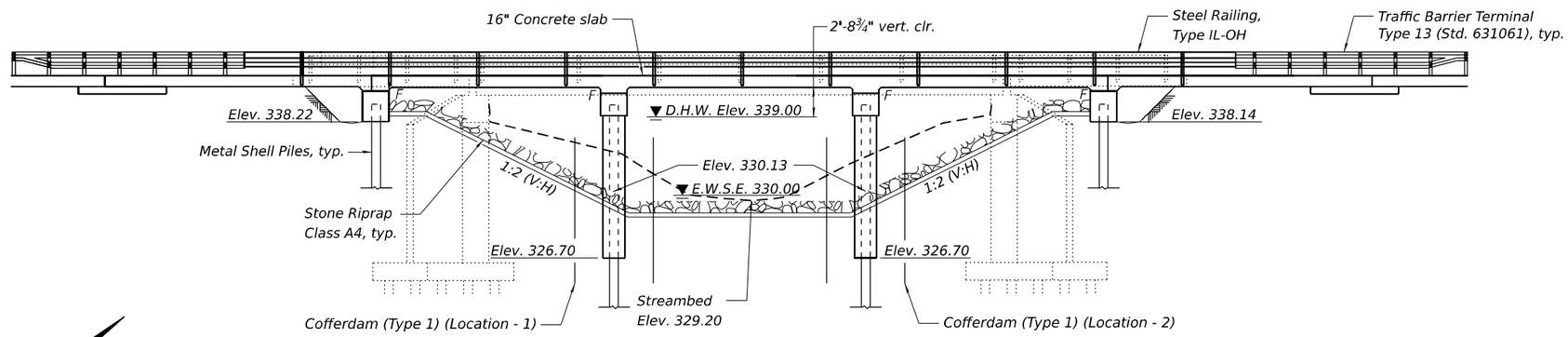

ELEVATION

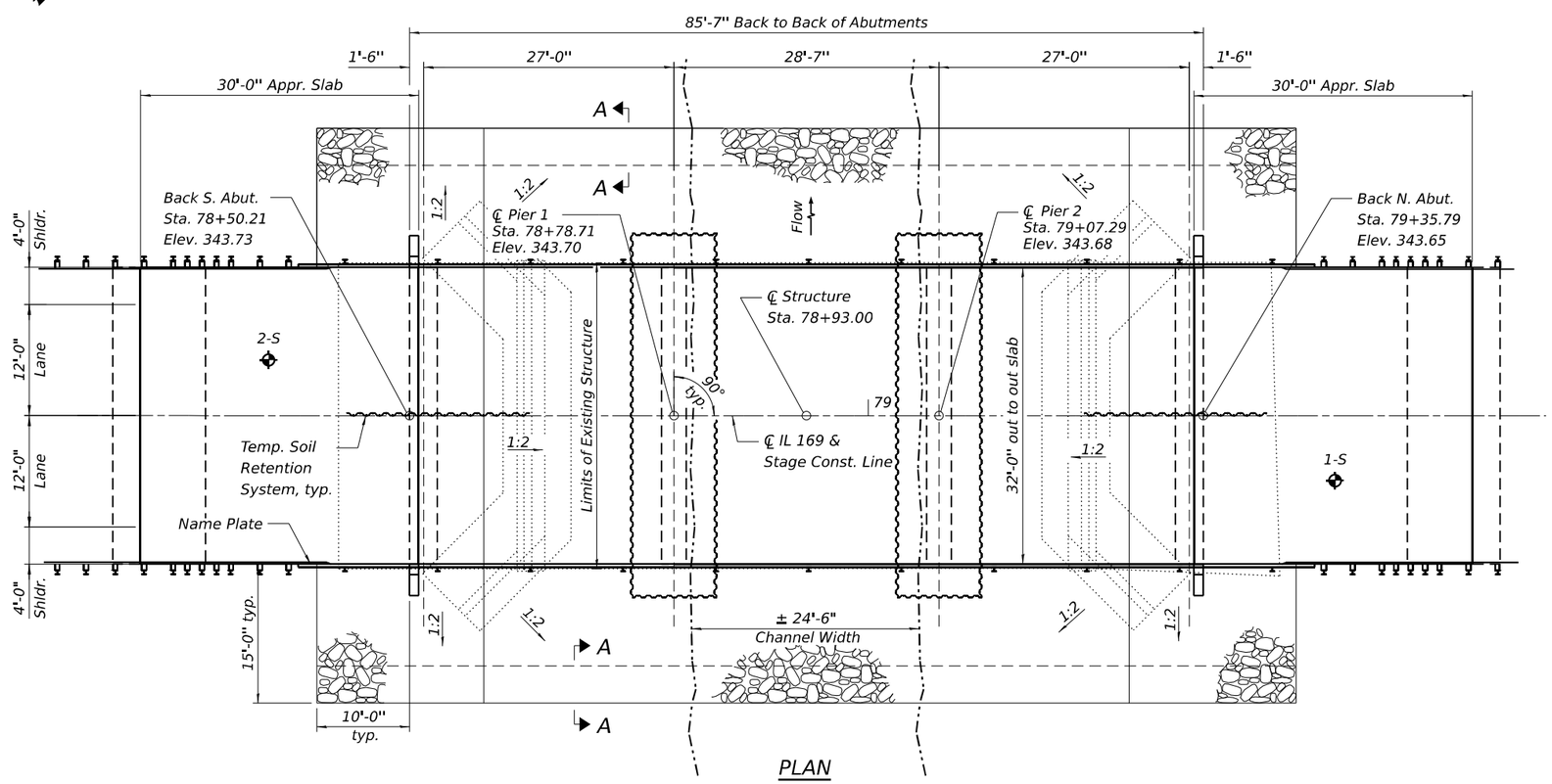

PLAN

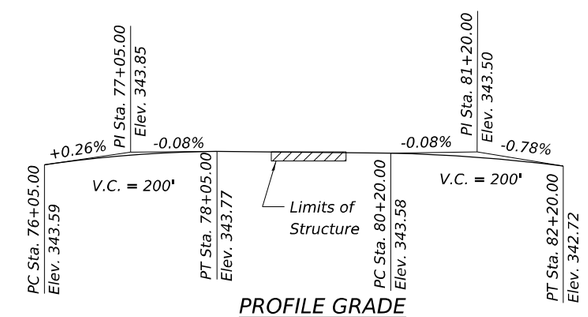

PROFILE GRADE

Along ℄ IL 169

LEGEND

- Soil Boring
- Stone Riprap Class A4
- Edge of Channel

LICENSED STRUCTURAL ENGINEER
JOSEPH T. HEGER
081-008156
STATE OF ILLINOIS

4-16-25
Exp. Date 11/30/2026

APPROVED
For Structural Adequacy Only
Engineer of Bridges & Structures

GENERAL PLAN AND ELEVATION
IL 169 OVER KITCHEL SLOUGH
F.A.S. RTE. 2937 - SEC. 116B-1
PULASKI COUNTY
STATION 78+93.00
STRUCTURE NO. 077-0042

FILE NAME: L:\IDOT\22006610-00\WO_11\78793\CADD Data\Bridge\CADD Sheets\0770042-78793-001-GPE.dgn

CMT
License No. 184-000613
© Copyright CMT, Inc.

USER NAME = vtan	DESIGNED - VT	REVISED -	
	DRAWN - VT	REVISED -	
	CHECKED - DAC	REVISED -	
PLOT DATE = 4/16/2025	DATE - 04/18/2025	REVISED -	

STATE OF ILLINOIS
DEPARTMENT OF TRANSPORTATION

GENERAL PLAN AND ELEVATION
STRUCTURE NO. 077-0042

SCALE: SHEET 1 OF 23 SHEETS STA. TO STA.

F.A.S. RTE.	SECTION	COUNTY	TOTAL SHEETS	SHEET NO.
2937	116B-1	PULASKI	76	30

CONTRACT NO. 78793

ILLINOIS FED. AID PROJECT

GENERAL NOTES

1. Reinforcement bars designated (E) shall be epoxy coated.
2. The Contractor shall make allowance for the deflection of forms, shrinkage and settlement of falsework, in addition to allowance for dead load deflection. Forms for deck slab shall be removed prior to placement of bridge approach slab.
3. Excavation behind existing abutment walls shall be performed to balance front and back soil pressure before removing the existing superstructure. For staged structures, the Contractor shall sawcut the upper portion of the existing abutment at the stage removal line before Stage I removal to ensure the remaining portion will not be prematurely damaged.
4. Layout of the slope protection system may be varied to suit ground conditions in the field as directed by the Engineer.
5. The embankment configuration shown shall be the minimum that must be placed and compacted prior to construction of the abutments.
6. It shall be the Contractor's responsibility to verify the location of utilities prior to starting construction. Contact J.U.L.I.E, 800-892-0123

INDEX OF SHEETS

TOTAL BILL OF MATERIAL

ITEM	UNIT	SUPER	SUB	TOTAL
Stone Riprap, Class A4	Sq. Yd.		737	737
Filter Fabric	Sq. Yd.		737	737
Removal of Existing Structures	Each		1	1
Structure Excavation	Cu. Yd.		322	322
Cofferdam Excavation	Cu. Yd.		321	321
Cofferdam (Type 1) (Location - 1)	Each		1	1
Cofferdam (Type 1) (Location - 2)	Each		1	1
Concrete Structures	Cu. Yd.		125.1	125.1
Concrete Superstructure	Cu. Yd.	140.5		140.5
Bridge Deck Grooving	Sq. Yd.	479		479
Protective Coat	Sq. Yd.	512		512
Concrete Superstructure (Approach Slab)	Cu. Yd.	89.3		89.3
Reinforcement Bars, Epoxy Coated	Pound	107,000	11,130	118,130
Bar Splicers	Each	560	166	726
Steel Railing, Type IL-OH	Foot	219		219
Furnishing Metal Shell Piles 14"x0.250"	Foot		1,270	1,270
Driving Piles	Foot		1,270	1,270
Test Pile Metal Shells	Each		2	2
Name Plates	Each	1		1
Temporary Soil Retention System	Sq. Ft.		241	241
Granular Backfill for Structures	Cu. Yd.		76	76
Pipe Underdrains for Structures 4"	Foot		78	78
Asbestos Bearing Pad Removal	Each		20	20

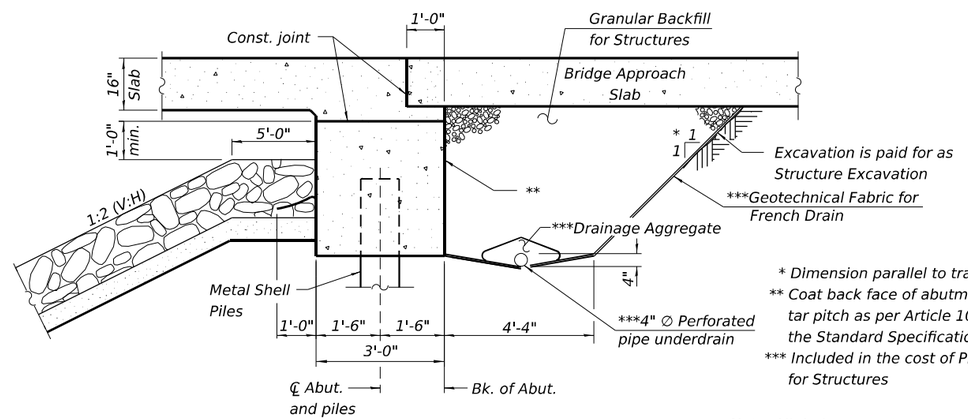

* Dimension parallel to traffic
** Coat back face of abutment with coal tar pitch as per Article 1061.03 of the Standard Specifications
*** Included in the cost of Pipe Underdrains for Structures

SECTION THRU INTEGRAL ABUTMENT

Note: All drainage system components shall extend to 2'-0" from the end of each wingwall except an outlet pipe shall extend until intersecting with the side slopes. The pipes shall drain into concrete headwalls. (See Article 601.05 of the Standard Specifications and Highway Standard 601101).

STA. 78+93.00
BUILT 20 BY
STATE OF ILLINOIS
F.A.S. RTE. 2937 - SEC. 116B-1
LOADING HL-93
STRUCTURE NO. 077-0042

NAME PLATE

See Std. 515001

WATERWAY INFORMATION

Drainage Area = 6.5 Sq. Mi.

Flood	Freq. Yr.	Q C.F.S.	Opening Ft² Exist.	Opening Ft² Prop.	Nat. H.W.E.	Head - Ft. Exist.	Head - Ft. Prop.	Headwater El. Exist.	Headwater El. Prop.
Ten-Year	10	347	244	308	337.7	0.0	0.0	337.7	337.7
Design	50	511	299	376	339.0	0.0	0.0	339.0	339.0
Base	100	582	328	402	339.5	0.0	0.0	339.5	339.5
Overtopping	200	658	345	418	339.8	0.0	0.0	339.8	339.8
Max. Calc.	500	759	368	439	340.2	0.0	0.0	340.2	340.2

Existing 10 Year Average Velocity (Q/A) = 1.7 ft/s
Proposed 10 Year Average Velocity (Q/A) = 1.7 ft/s

DESIGN SCOUR ELEVATION TABLE

Event / Limit State	Design Scour Elevations (ft.) S. Abut.	Pier 1	Pier 2	N. Abut.	Item 113
Q100	338.22	326.80	326.80	338.14	8
Q200	338.22	326.60	326.60	338.14	
Design	338.22	326.70	326.70	338.14	
Check	338.22	326.60	326.60	338.14	

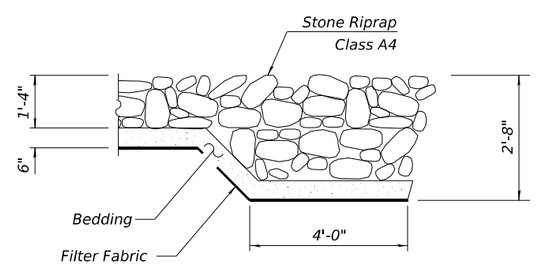

SECTION A-A

MODEL: General Data [Sheet]
FILE NAME: L:\IDOT\2200661D-00\WO_11\78793\CADD Data\Bridge\CADD Sheets\0770042-78793-002-General Data.dgn

CMT
License No. 184-000613
© Copyright CMT, Inc.

USER NAME = vtan	DESIGNED - VT	REVISED -	
	DRAWN - VT	REVISED -	
	CHECKED - DAC	REVISED -	
PLOT DATE = 4/15/2025	DATE - 04/18/2025	REVISED -	

STATE OF ILLINOIS
DEPARTMENT OF TRANSPORTATION

GENERAL DATA
STRUCTURE NO. 077-0042

SCALE: | SHEET 2 OF 23 SHEETS | STA. | TO STA.

F.A.S. RTE.	SECTION	COUNTY	TOTAL SHEETS	SHEET NO.
2937	116B-1	PULASKI	76	31

CONTRACT NO. 78793
ILLINOIS | FED. AID PROJECT

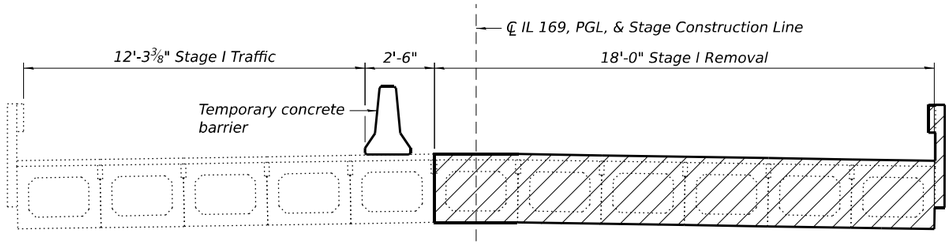

STAGE I REMOVAL

(Looking North)

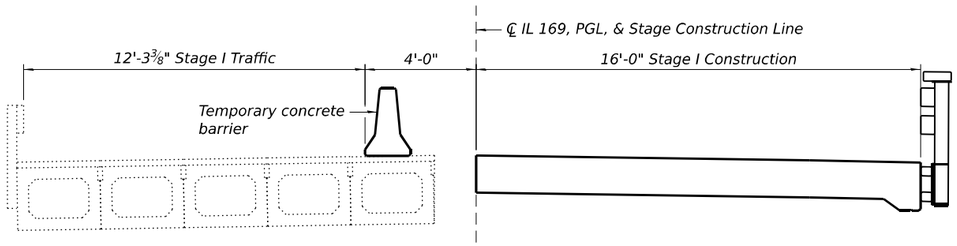

STAGE I CONSTRUCTION

(Looking North)

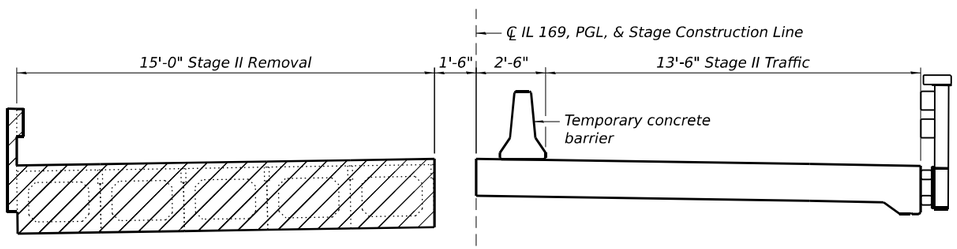

STAGE II REMOVAL

(Looking North)

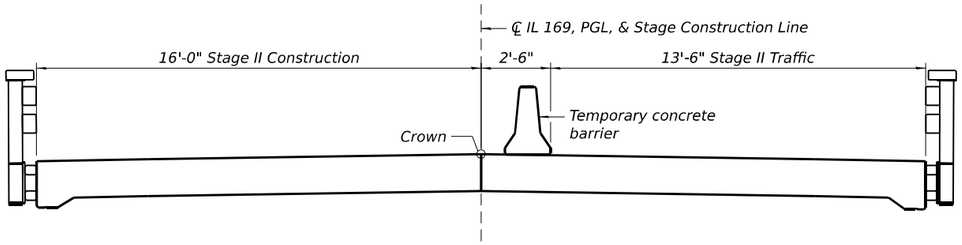

STAGE II CONSTRUCTION

(Looking North)

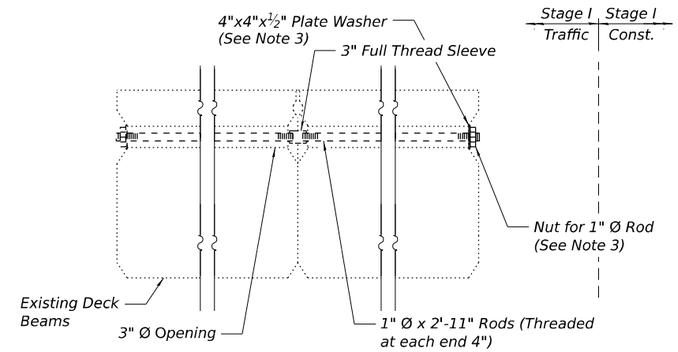

EXISTING DECK BEAM - AT STAGE CONSTRUCTION LINE

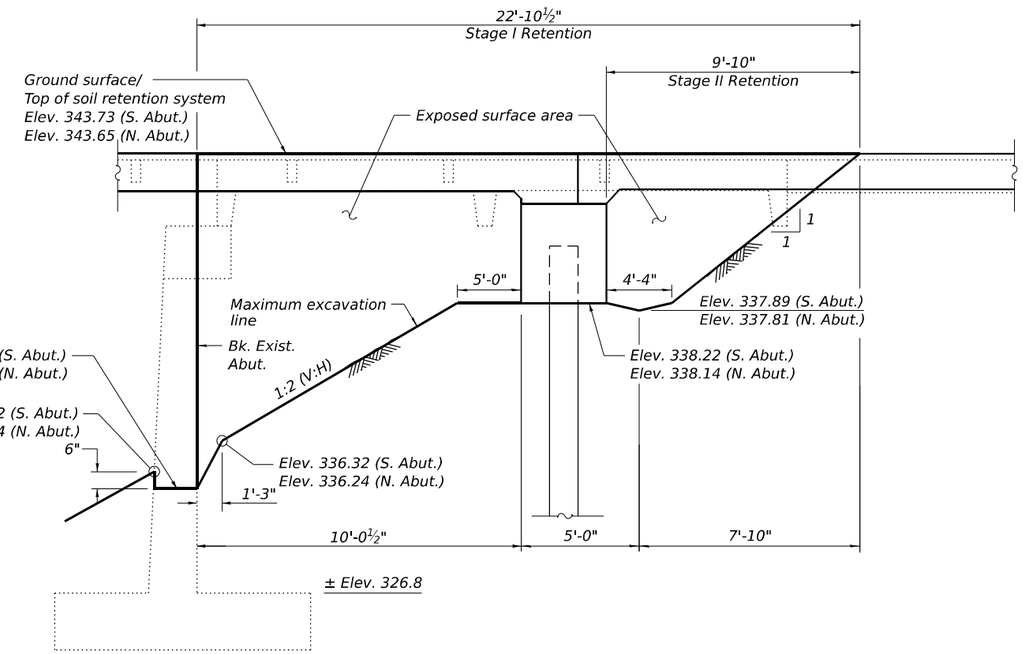

TEMPORARY SOIL RETENTION SYSTEM

(Dimensions parallel to roadway)

Notes:

1. *A cantilevered sheet piling design does not appear feasible and additional members or other retention systems may be necessary. The Contractor shall submit a temporary soil retention system design including plan details and calculations for review and acceptance by the Engineer.*
2. *For the quantity of Temporary Concrete Barrier, see roadway staging plan sheets.*
3. *Once the existing beams on the Stage I Removal side have been removed, nuts and washers shall be fastened to the existing 1" Ø rods of the existing beams remaining on the Stage I Traffic side. The bridge shall be temporarily closed to traffic from the start of Stage I beam removal and until the washers and nuts are all installed on the remaining beams.*
4. *Hatched area indicates Removal of Existing Structures.*
5. *For details of Temporary Concrete Barrier, see sheet 4 of 23.*

FILE NAME: ...\IDOT\22006610-00\WO_11\78793\CADD Data\Bridge\CADD Sheets\0770042-78793-003-Stage Construction Details.dgn

CMT
License No. 184-000613

USER NAME = vtan	DESIGNED - VT	REVISED -	
	DRAWN - VT	REVISED -	
	CHECKED - DAC	REVISED -	
PLOT DATE = 5/23/2025	DATE - 04/18/2025	REVISED -	

STATE OF ILLINOIS
DEPARTMENT OF TRANSPORTATION

STAGE CONSTRUCTION DETAILS
STRUCTURE NO. 077-0042

SCALE: | SHEET 3 OF 23 SHEETS | STA. | TO STA.

F.A.S. RTE.	SECTION	COUNTY	TOTAL SHEETS	SHEET NO.
2937	116B-1	PULASKI	76	32

CONTRACT NO. 78793

ILLINOIS | FED. AID PROJECT

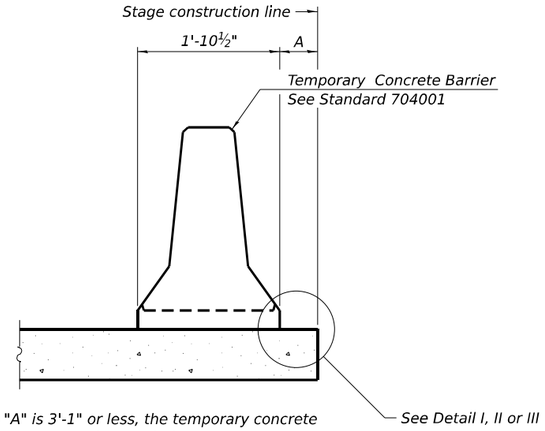

When "A" is 3'-1" or less, the temporary concrete barrier shall be restrained to the new slab according to Detail I, II or III. No restraint is required when "A" is greater than 3'-1".

NEW SLAB OR NEW DECK BEAM

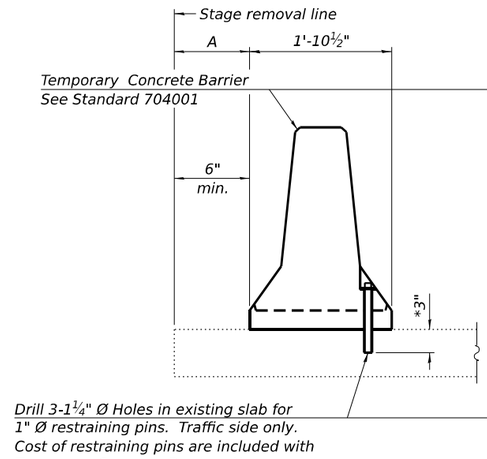

EXISTING SLAB

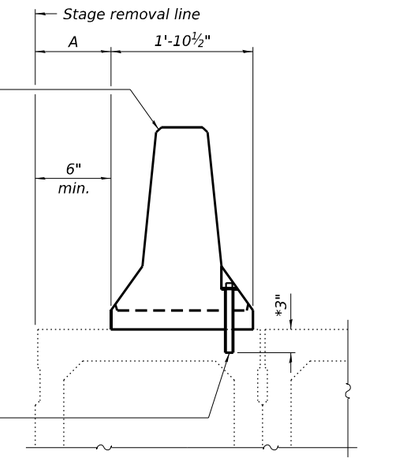

* When hot-mix asphalt wearing surface is present, embedment shall be 3" plus the wearing surface depth.

EXISTING DECK BEAM

SECTIONS THRU SLAB OR DECK BEAM

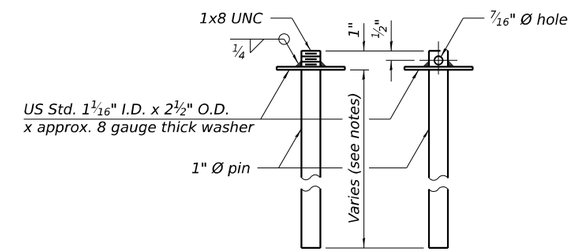

RESTRAINING PIN

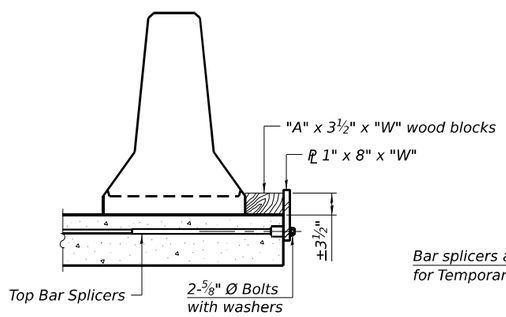

DETAIL I

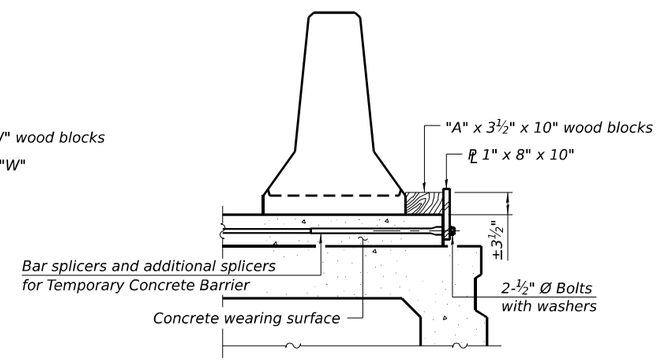

DETAIL II

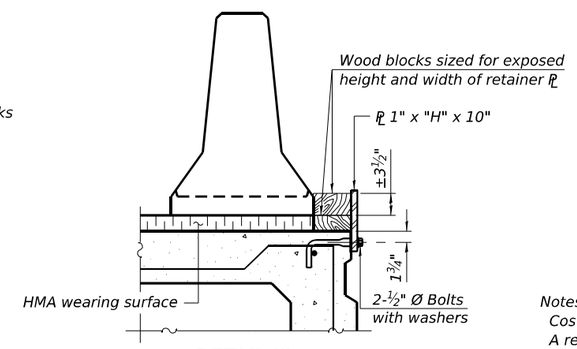

DETAIL III

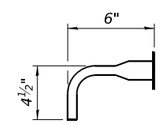

BAR SPLICER FOR #4 BAR - DETAIL III

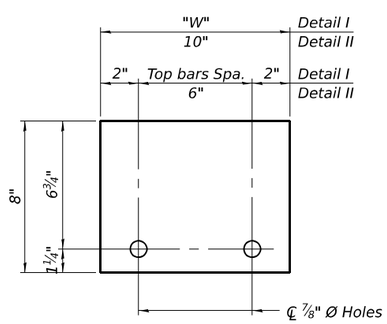

STEEL RETAINER PL 1" x 8" x "W"

(Detail I and II)

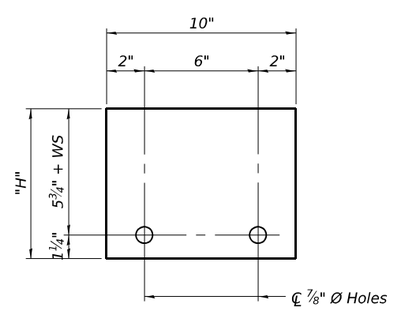

STEEL RETAINER PL 1" x "H" x 10"

(Detail III)

Notes:

Cost of retainer assembly is included with Temporary Concrete Barrier.

A retainer assembly shall be located at the approximate ℄ of each temporary concrete barrier.

The retainer plate shall not be removed until the concrete on the adjacent stage is ready to be poured. For Detail III applications the retainer plate shall not be removed until just prior to placing the adjacent beam.

When the 'A' dimension is less than 1½", the wood block shall be omitted and the barrier shall be placed in direct contact with the steel retainer plate. For deck beam applications the minimum required 'A' distance is 6" to accommodate the shear key clamping device.

Detail I - Installation for a new bridge deck or bridge slab.

Detail II - Installation for a new deck beam with an initial concrete wearing surface. Additional bar splicers shall be provided at 6'-0" centers and paired with the bar splicers of the concrete wearing surface reinforcement to accommodate the installation of the retainer assemblies. The cost of the additional bar splicers is included with the concrete wearing surface.

Detail III - Installation for a new deck beam with no initial wearing surface or with an initial hot-mix asphalt (HMA) wearing surface present. The deck beam directly beneath the temporary concrete barrier shall be fabricated with bar splicer inserts in the side of the beam, as detailed, to accommodate the installation of the retainer assemblies. A pair of bar splicers, 6" apart, shall be placed at 6'-0" centers along the length of the beam. The cost of the bar splicers is included with the deck beam.

RAILING CRITERIA

NCHRP 350 Test Level	3
Railing Weight (plf)	440

R-27

5-15-2023

FILE NAME: ...\IDOT\2200610-00\WO_11\78793\CADD Data\Bridge\CADD Sheets\0770042-78793-004-Temporary Concrete Barrier for Stage Construction.dgn

CMT
License No. 184-000613
© Copyright CMT, Inc.

USER NAME = vtan	DESIGNED - VT	REVISED -	
	DRAWN - VT	REVISED -	
	CHECKED - DAC	REVISED -	
PLOT DATE = 2/12/2025	DATE - 04/18/2025	REVISED -	

STATE OF ILLINOIS
DEPARTMENT OF TRANSPORTATION

TEMPORARY CONCRETE BARRIER FOR STAGE CONSTRUCTION
STRUCTURE NO. 077-0042

SCALE: SHEET 4 OF 23 SHEETS STA. TO STA.

F.A.S. RTE.	SECTION	COUNTY	TOTAL SHEETS	SHEET NO.
2937	116B-1	PULASKI	76	33
		CONTRACT NO. 78793		
	ILLINOIS	FED. AID PROJECT		

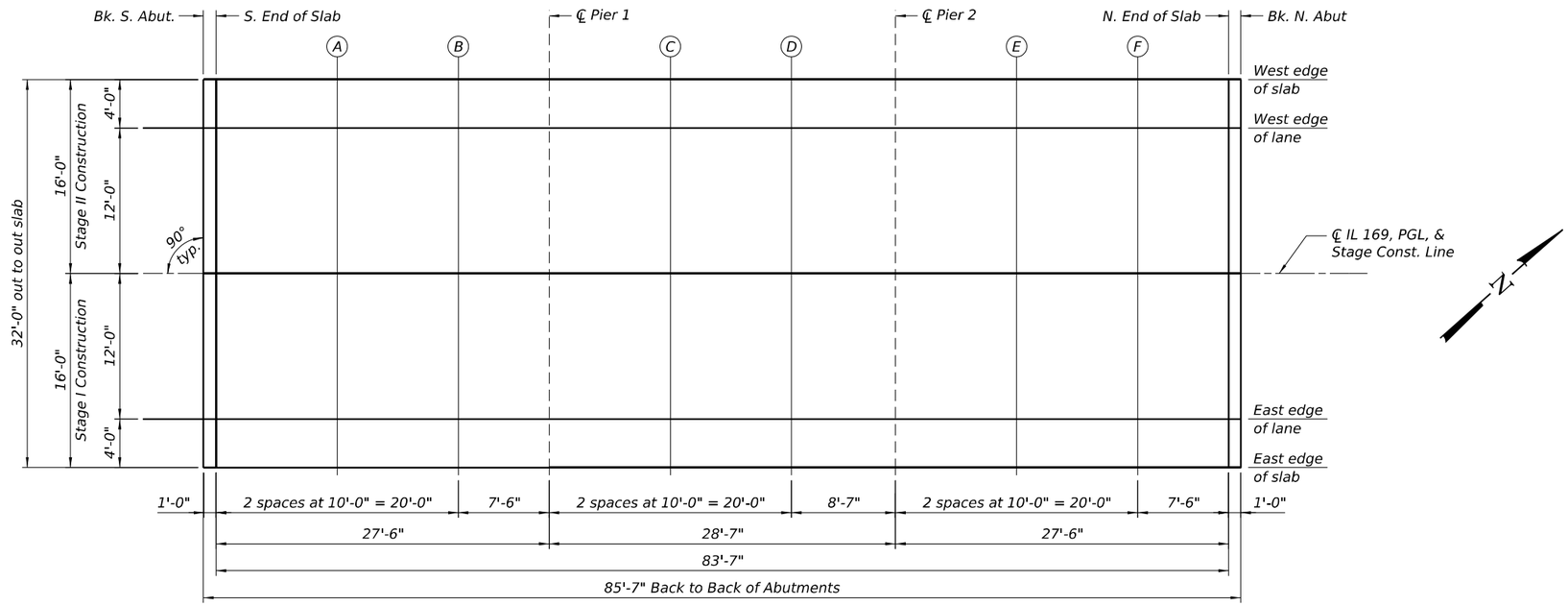

PLAN

WEST EDGE OF SLAB

Location	Station	Offset	Theoretical Grade Elevations
Bk. S. Abut.	78+50.21	-16.00	343.47
S. End of Slab	78+51.21	-16.00	343.47
A	78+61.21	-16.00	343.46
B	78+71.21	-16.00	343.45
CL Pier 1	78+78.71	-16.00	343.44
C	78+88.71	-16.00	343.44
D	78+98.71	-16.00	343.43
CL Pier 2	79+07.29	-16.00	343.42
E	79+17.29	-16.00	343.41
F	79+27.29	-16.00	343.40
N. End of Slab	79+34.79	-16.00	343.40
Bk. N. Abut.	79+35.79	-16.00	343.39

WEST EDGE OF LANE

Location	Station	Offset	Theoretical Grade Elevations
Bk. S. Abut.	78+50.21	-12.00	343.55
S. End of Slab	78+51.21	-12.00	343.55
A	78+61.21	-12.00	343.54
B	78+71.21	-12.00	343.53
CL Pier 1	78+78.71	-12.00	343.52
C	78+88.71	-12.00	343.52
D	78+98.71	-12.00	343.51
CL Pier 2	79+07.29	-12.00	343.50
E	79+17.29	-12.00	343.49
F	79+27.29	-12.00	343.48
N. End of Slab	79+34.79	-12.00	343.48
Bk. N. Abut.	79+35.79	-12.00	343.47

℄ IL 169, PGL, & STAGE CONST. LINE

Location	Station	Offset	Theoretical Grade Elevations
Bk. S. Abut.	78+50.21	0.00	343.73
S. End of Slab	78+51.21	0.00	343.73
A	78+61.21	0.00	343.72
B	78+71.21	0.00	343.71
CL Pier 1	78+78.71	0.00	343.70
C	78+88.71	0.00	343.70
D	78+98.71	0.00	343.69
CL Pier 2	79+07.29	0.00	343.68
E	79+17.29	0.00	343.67
F	79+27.29	0.00	343.66
N. End of Slab	79+34.79	0.00	343.66
Bk. N. Abut.	79+35.79	0.00	343.65

EAST EDGE OF LANE

Location	Station	Offset	Theoretical Grade Elevations
Bk. S. Abut.	78+50.21	12.00	343.55
S. End of Slab	78+51.21	12.00	343.55
A	78+61.21	12.00	343.54
B	78+71.21	12.00	343.53
CL Pier 1	78+78.71	12.00	343.52
C	78+88.71	12.00	343.52
D	78+98.71	12.00	343.51
CL Pier 2	79+07.29	12.00	343.50
E	79+17.29	12.00	343.49
F	79+27.29	12.00	343.48
N. End of Slab	79+34.79	12.00	343.48
Bk. N. Abut.	79+35.79	12.00	343.47

EAST EDGE OF SLAB

Location	Station	Offset	Theoretical Grade Elevations
Bk. S. Abut.	78+50.21	16.00	343.47
S. End of Slab	78+51.21	16.00	343.47
A	78+61.21	16.00	343.46
B	78+71.21	16.00	343.45
CL Pier 1	78+78.71	16.00	343.44
C	78+88.71	16.00	343.44
D	78+98.71	16.00	343.43
CL Pier 2	79+07.29	16.00	343.42
E	79+17.29	16.00	343.41
F	79+27.29	16.00	343.40
N. End of Slab	79+34.79	16.00	343.40
Bk. N. Abut.	79+35.79	16.00	343.39

Note:
The dead load deflections are less than ⅛", therefore, grade elevations adjusted for dead load deflections are not shown.

MODEL: Top of Slab Elevations [Sheet]
FILE NAME: L:\IDOT\22006610-00\WO_11\78793\CADD Data\Bridge\CADD Sheets\0770042-78793-005-Top of Slab Elevations.dgn

CMT
License No. 184-000613

USER NAME = vtan	DESIGNED - VT	REVISED -
	DRAWN - VT	REVISED -
	CHECKED - DAC	REVISED -
PLOT DATE = 4/17/2025	DATE - 04/18/2025	REVISED -

STATE OF ILLINOIS
DEPARTMENT OF TRANSPORTATION

TOP OF SLAB ELEVATIONS
STRUCTURE NO. 077-0042

SCALE: | SHEET 5 OF 23 SHEETS | STA. | TO STA.

F.A.S. RTE.	SECTION	COUNTY	TOTAL SHEETS	SHEET NO.
2937	116B-1	PULASKI	76	34

CONTRACT NO. 78793

ILLINOIS | FED. AID PROJECT

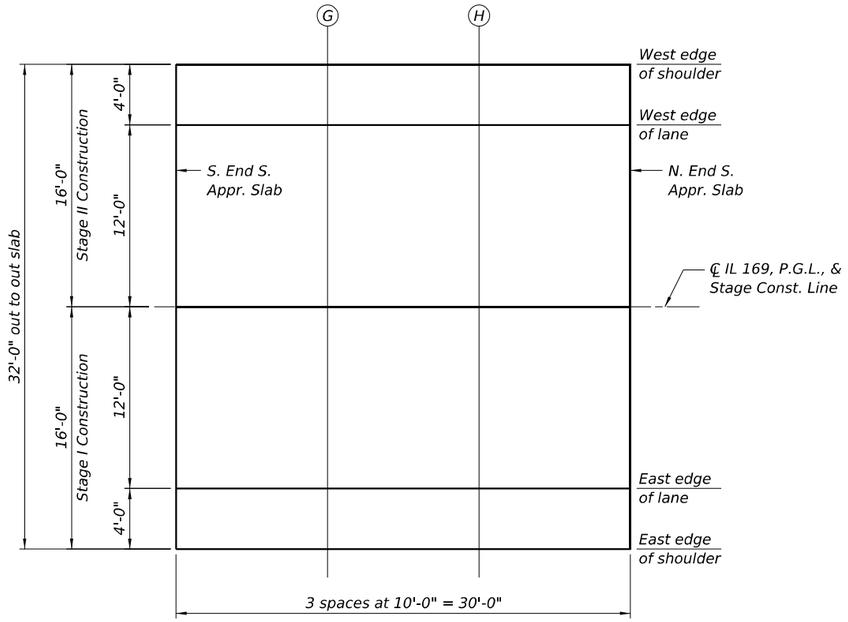

SOUTH APPROACH SLAB PLAN

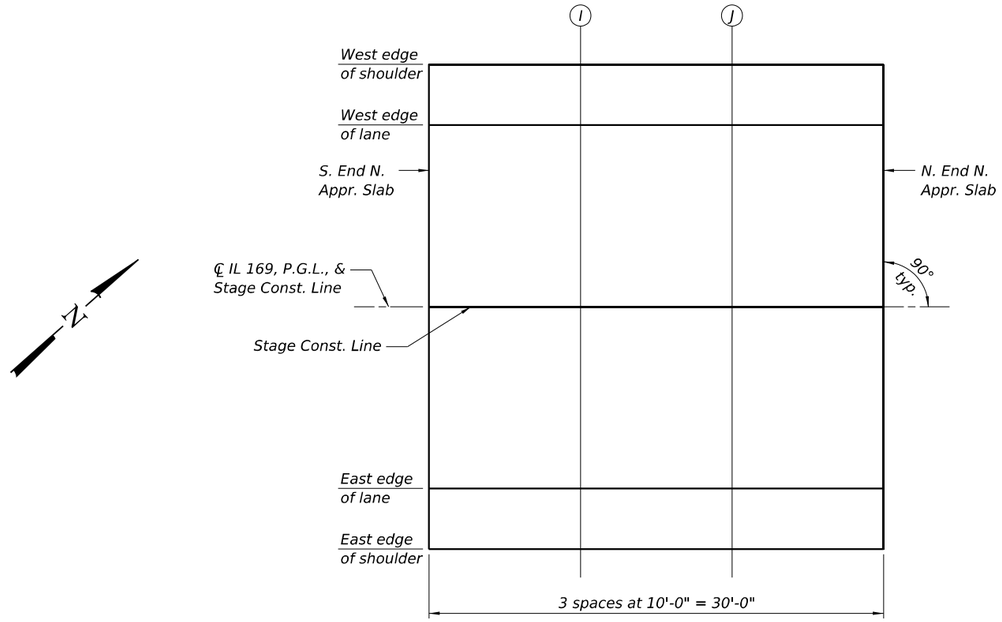

NORTH APPROACH SLAB PLAN

WEST EDGE OF SHOULDER

Location	Station	Offset	Theoretical Grade Elevations
S. End S. Appr. Slab	78+21.21	-16.00	343.50
G	78+31.21	-16.00	343.49
H	78+41.21	-16.00	343.48
N. End S. Appr. Slab	78+51.21	-16.00	343.47

WEST EDGE OF LANE

Location	Station	Offset	Theoretical Grade Elevations
S. End S. Appr. Slab	78+21.21	-12.00	343.58
G	78+31.21	-12.00	343.57
H	78+41.21	-12.00	343.56
N. End S. Appr. Slab	78+51.21	-12.00	343.55

WEST EDGE OF SHOULDER

Location	Station	Offset	Theoretical Grade Elevations
S. End N. Appr. Slab	79+34.79	-16.00	343.40
I	79+44.79	-16.00	343.39
J	79+54.79	-16.00	343.38
N. End N. Appr. Slab	79+64.79	-16.00	343.37

WEST EDGE OF LANE

Location	Station	Offset	Theoretical Grade Elevations
S. End N. Appr. Slab	79+34.79	-12.00	343.48
I	79+44.79	-12.00	343.47
J	79+54.79	-12.00	343.46
N. End N. Appr. Slab	79+64.79	-12.00	343.45

℄ IL 169, PGL, & STAGE CONST. LINE

Location	Station	Offset	Theoretical Grade Elevations
S. End S. Appr. Slab	78+21.21	0.00	343.76
G	78+31.21	0.00	343.75
H	78+41.21	0.00	343.74
N. End S. Appr. Slab	78+51.21	0.00	343.73

EAST EDGE OF LANE

Location	Station	Offset	Theoretical Grade Elevations
S. End S. Appr. Slab	78+21.21	12.00	343.58
G	78+31.21	12.00	343.57
H	78+41.21	12.00	343.56
N. End S. Appr. Slab	78+51.21	12.00	343.55

℄ IL 169, PGL, & STAGE CONST. LINE

Location	Station	Offset	Theoretical Grade Elevations
S. End N. Appr. Slab	79+34.79	0.00	343.66
I	79+44.79	0.00	343.65
J	79+54.79	0.00	343.64
N. End N. Appr. Slab	79+64.79	0.00	343.63

EAST EDGE OF LANE

Location	Station	Offset	Theoretical Grade Elevations
S. End N. Appr. Slab	79+34.79	12.00	343.48
I	79+44.79	12.00	343.47
J	79+54.79	12.00	343.46
N. End N. Appr. Slab	79+64.79	12.00	343.45

EAST EDGE OF SHOULDER

Location	Station	Offset	Theoretical Grade Elevations
S. End S. Appr. Slab	78+21.21	16.00	343.50
G	78+31.21	16.00	343.49
H	78+41.21	16.00	343.48
N. End S. Appr. Slab	78+51.21	16.00	343.47

EAST EDGE OF SHOULDER

Location	Station	Offset	Theoretical Grade Elevations
S. End N. Appr. Slab	79+34.79	16.00	343.40
I	79+44.79	16.00	343.39
J	79+54.79	16.00	343.38
N. End N. Appr. Slab	79+64.79	16.00	343.37

MODEL: Top of Approach Slab Elevations [Sheet]
FILE NAME: L:\IDOT\220086\10-00\WO_11\78793\CADD Data\Bridge\CADD Sheets\0770042-78793-006-Top of Approach Slab Elevations.dgn

CMT
License No. 184-000613 © Copyright CMT, Inc.

USER NAME = vtan	DESIGNED - VT	REVISED -	
	DRAWN - VT	REVISED -	
	CHECKED - DAC	REVISED -	
PLOT DATE = 4/14/2025	DATE - 04/18/2025	REVISED -	

STATE OF ILLINOIS
DEPARTMENT OF TRANSPORTATION

TOP OF APPROACH SLAB ELEVATIONS
STRUCTURE NO. 077-0042

SCALE: | SHEET 6 OF 23 SHEETS | STA. | TO STA.

F.A.S. RTE.	SECTION	COUNTY	TOTAL SHEETS	SHEET NO.
2937	116B-1	PULASKI	76	35
		CONTRACT NO. 78793		
		ILLINOIS	FED. AID PROJECT	

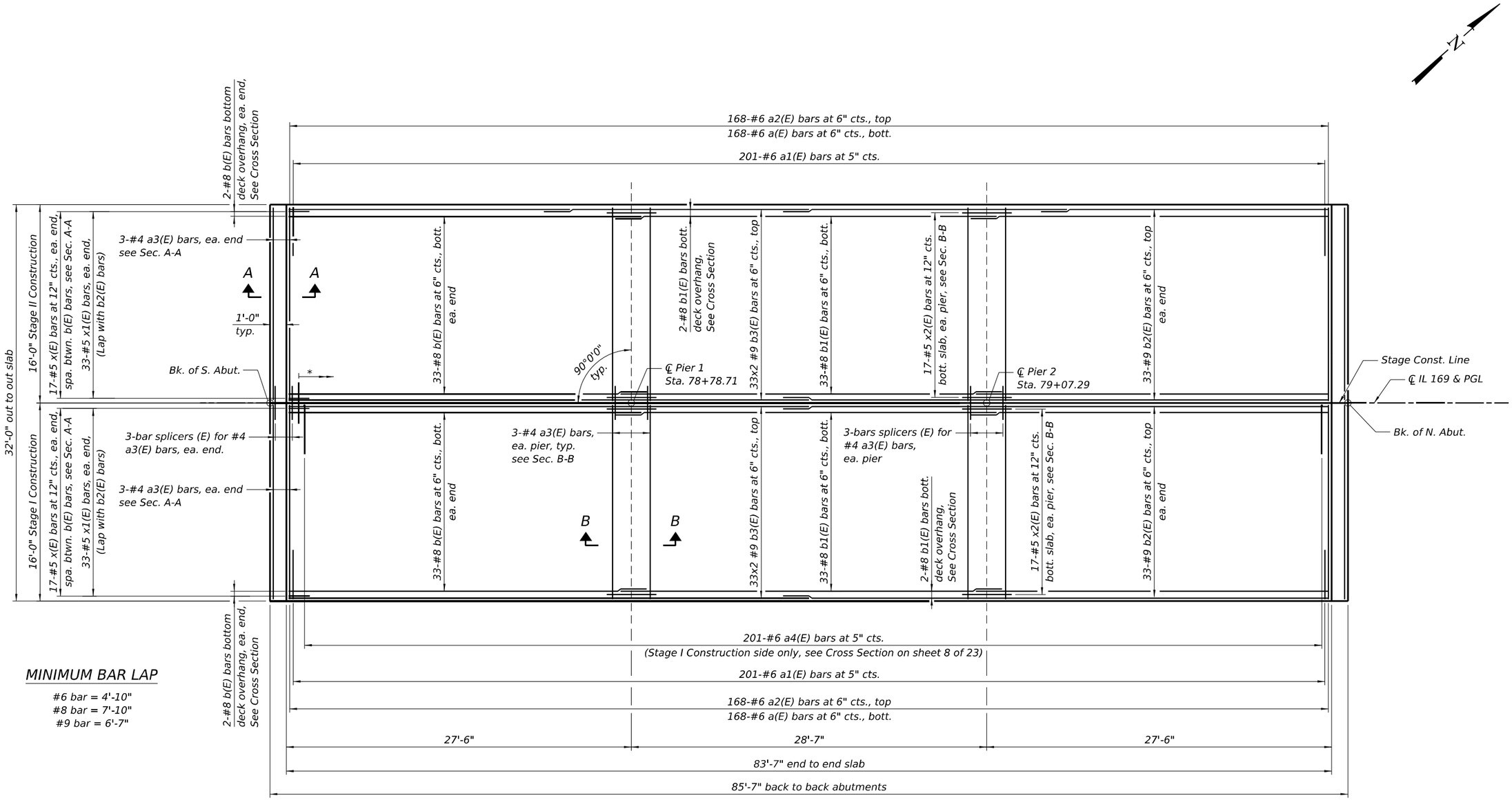

MINIMUM BAR LAP

#6 bar = 4'-10"
#8 bar = 7'-10"
#9 bar = 6'-7"

PLAN

* 168-bar splicers (E) for #6 a2(E) bars, top
168-bar splicers (E) for #6 a(E) bars, bottom

Notes:
1. See sheet 8 of 23 for Cross Section, superstructure details and Bill of Material.
2. Bars indicated thus 33 x 2-#9 etc. indicates 33 lines of bars with 2 lengths per line.
3. For Sections A-A and B-B, see sheet 8 of 23.

FILE NAME: L:\IDOT\2200661D-00\WO_11\78793\CADD Data\Bridge\CADD Sheets\0770042-78793-007-Superstructure.dgn

CMT
License No. 184-000613 © Copyright CMT, Inc.

USER NAME = vtan	DESIGNED - VT	REVISED -	
	DRAWN - VT	REVISED -	
	CHECKED - DAC	REVISED -	
PLOT DATE = 4/15/2025	DATE - 04/18/2025	REVISED -	

STATE OF ILLINOIS
DEPARTMENT OF TRANSPORTATION

SUPERSTRUCTURE
STRUCTURE NO. 077-0042

SCALE: SHEET 7 OF 23 SHEETS STA. TO STA.

F.A.S. RTE.	SECTION	COUNTY	TOTAL SHEETS	SHEET NO.
2937	116B-1	PULASKI	76	36
		CONTRACT NO. 78793		
		ILLINOIS FED. AID PROJECT		

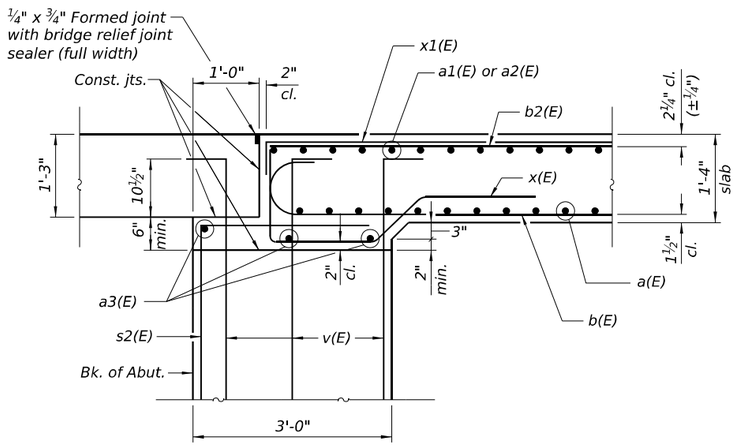

SECTION A-A

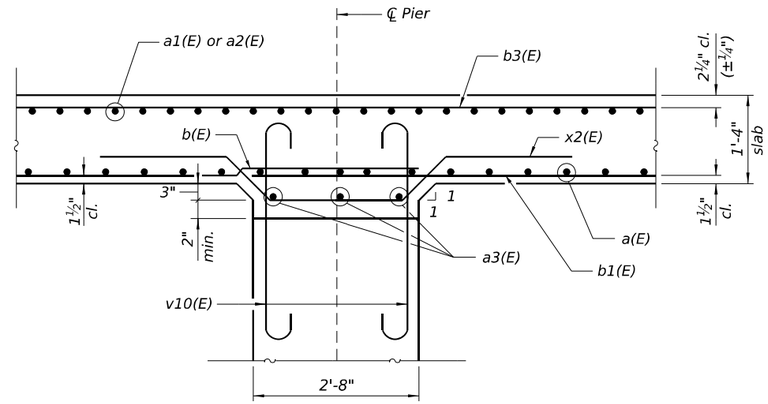

SECTION B-B

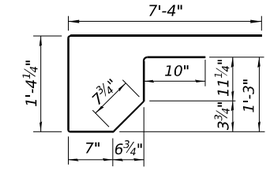

BAR a1(E)

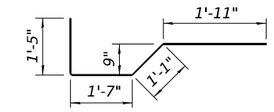

BAR x(E)

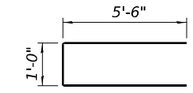

BAR a4(E)

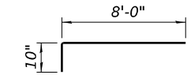

BAR x1(E)

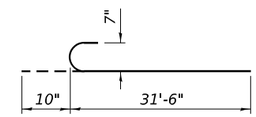

BAR b(E)

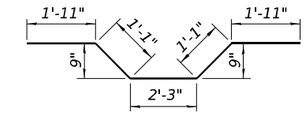

BAR x2(E)

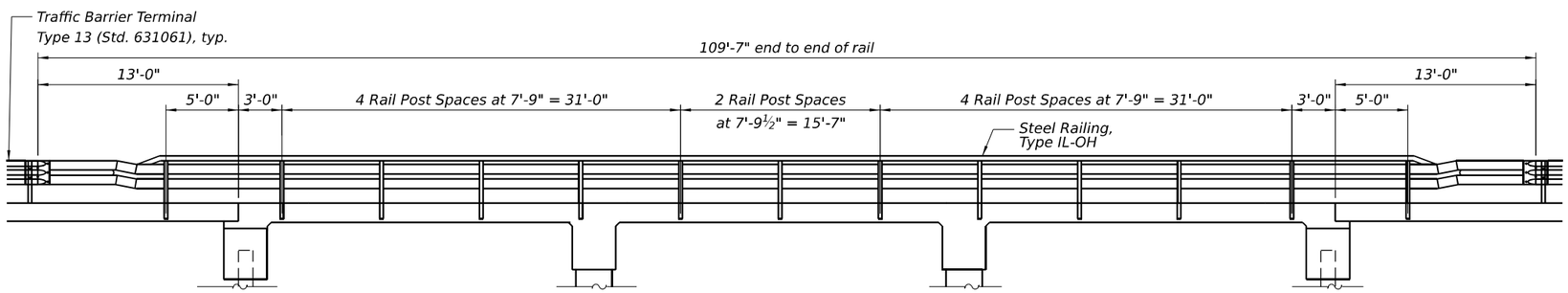

RAILING ELEVATION

(Showing Rail Post Spaces)

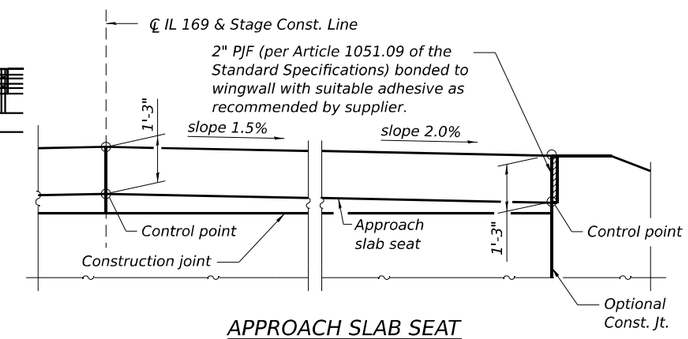

APPROACH SLAB SEAT

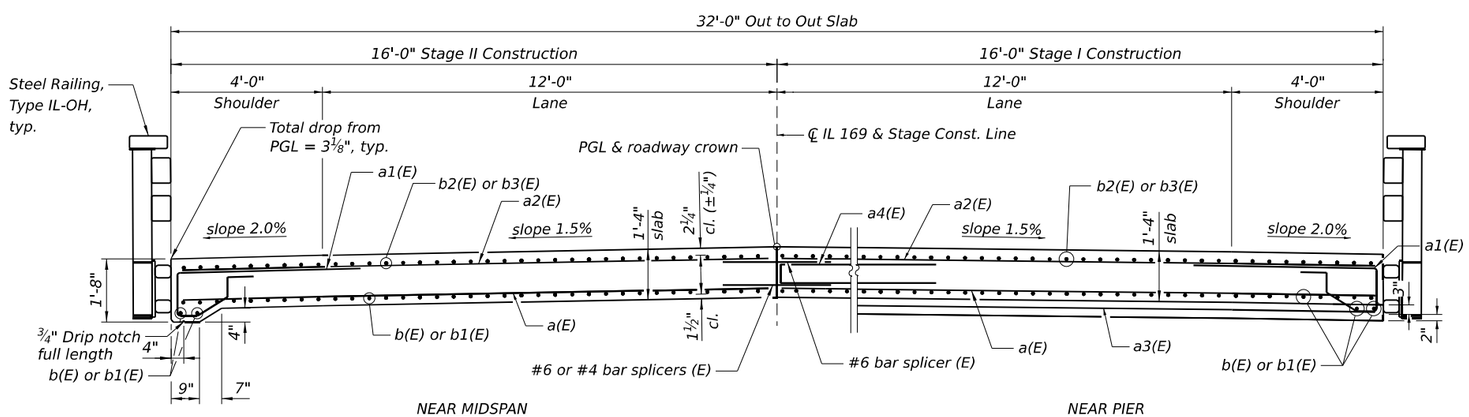

NEAR MIDSPAN

NEAR PIER

CROSS SECTION

(Looking North)

SUPERSTRUCTURE BILL OF MATERIAL

Bar	No.	Size	Length	Shape
a(E)	336	#6	15'-8"	
a1(E)	402	#6	11'-9"	
a2(E)	336	#6	15'-8"	
a3(E)	24	#4	15'-8"	
a4(E)	201	#6	12'-0"	
b(E)	140	#8	32'-4"	
b1(E)	70	#8	36'-0"	
b2(E)	132	#9	21'-7"	
b3(E)	132	#9	29'-11"	
x(E)	68	#5	6'-0"	
x1(E)	132	#5	8'-10"	
x2(E)	68	#5	8'-3"	
Concrete Superstructure			Cu. Yd.	140.5
Reinforcement Bars, Epoxy Coated			Pound	70,940

FILE NAME: L:\IDOT\22006610-00\WO_11\78793\CADD Data\Bridge\CADD Sheets\0770042-78793-008-Superstructure Details.dgn

CMT

License No. 184-000613 © Copyright CMT, Inc.

USER NAME = vtan	DESIGNED - VT	REVISED -	
	DRAWN - VT	REVISED -	
	CHECKED - DAC	REVISED -	
PLOT DATE = 5/27/2025	DATE - 04/18/2025	REVISED -	

STATE OF ILLINOIS
DEPARTMENT OF TRANSPORTATION

SUPERSTRUCTURE DETAILS
STRUCTURE NO. 077-0042

SCALE: SHEET 8 OF 23 SHEETS STA. TO STA.

F.A.S. RTE.	SECTION	COUNTY	TOTAL SHEETS	SHEET NO.
2937	116B-1	PULASKI	76	37

CONTRACT NO. 78793

ILLINOIS FED. AID PROJECT

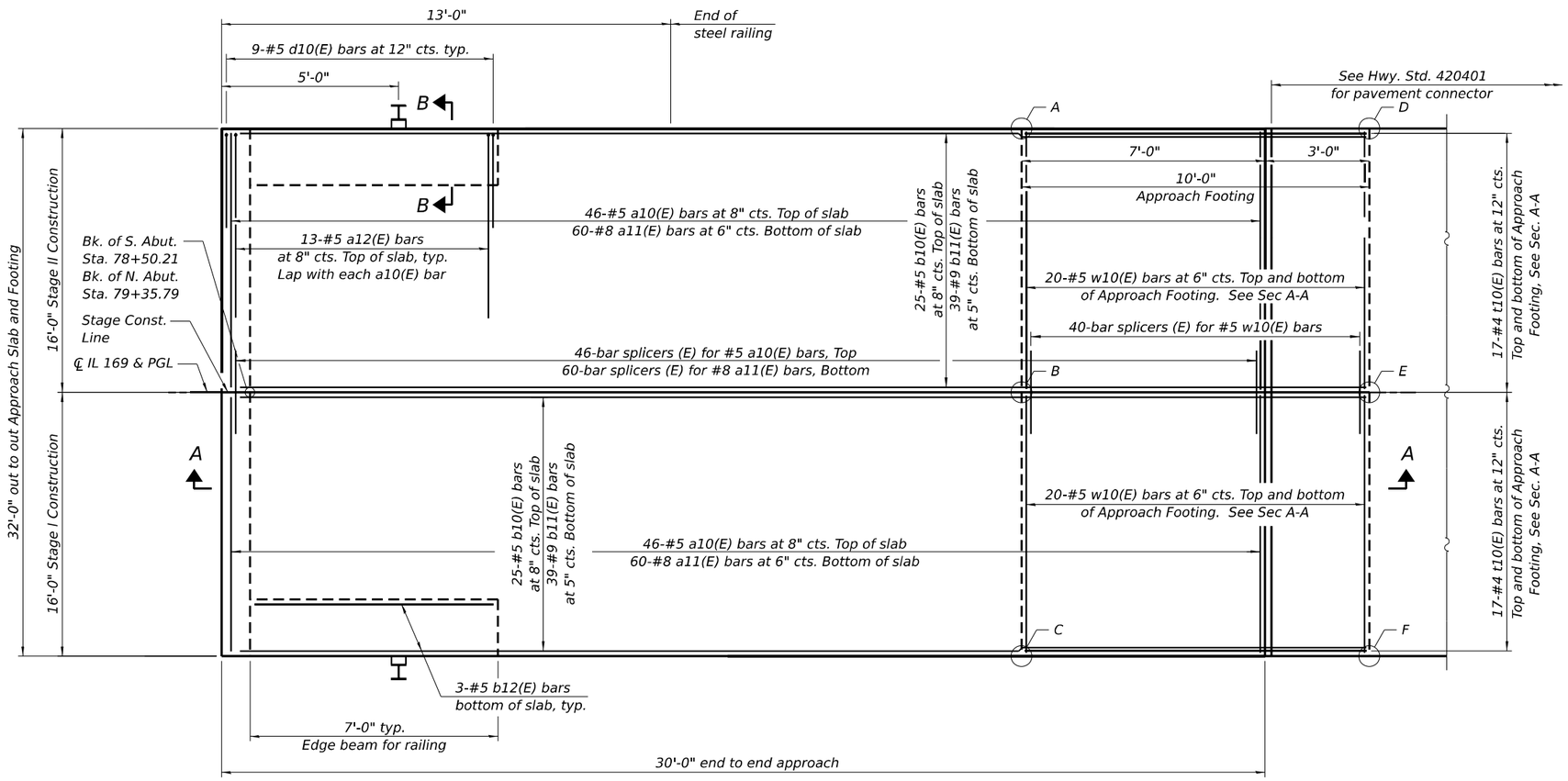

PLAN

(N. approach slab shown; S. approach slab similar by 180° rotation)

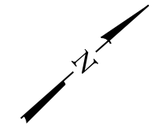

TOP AND BOTTOM ELEVATIONS FOR APPROACH FOOTING

South Approach			North Approach		
Point	Top	Bottom	Point	Top	Bottom
A	342.24	341.41	A	342.12	341.29
B	342.50	341.67	B	342.38	341.55
C	342.24	341.41	C	342.12	341.29
D	342.25	341.42	D	342.12	341.29
E	342.51	341.68	E	342.38	341.55
F	342.25	341.42	F	342.12	341.29

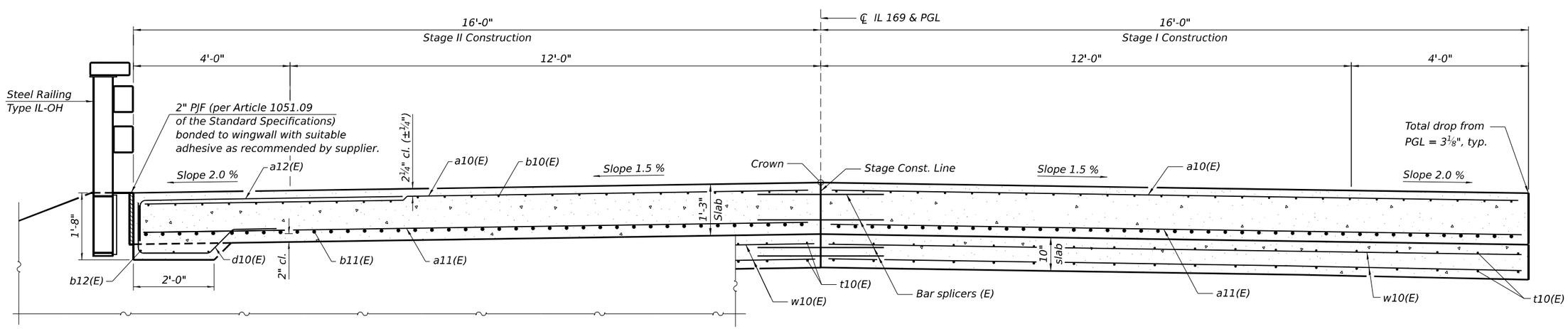

NEAR ABUTMENT

CROSS SECTION

(Looking North)

AT APPROACH FOOTING

FILE NAME: L:\IDOT\2200610-00\WO_11\78793\CADD Data\Bridge\CADD Sheets\0770042-78793-009-Bridge Approach Slab Plan.dgn

CMT
License No. 184-000613
© Copyright CMT, Inc.

USER NAME = vtan	DESIGNED - VT	REVISED -	
	DRAWN - VT	REVISED -	
	CHECKED - DAC	REVISED -	
PLOT DATE = 4/14/2025	DATE - 04/18/2025	REVISED -	

STATE OF ILLINOIS
DEPARTMENT OF TRANSPORTATION

BRIDGE APPROACH SLAB PLAN
STRUCTURE NO. 077-0042

SCALE: SHEET 9 OF 23 SHEETS STA. TO STA.

F.A.S. RTE.	SECTION	COUNTY	TOTAL SHEETS	SHEET NO.
2937	116B-1	PULASKI	76	38
		CONTRACT NO. 78793		
		ILLINOIS	FED. AID PROJECT	

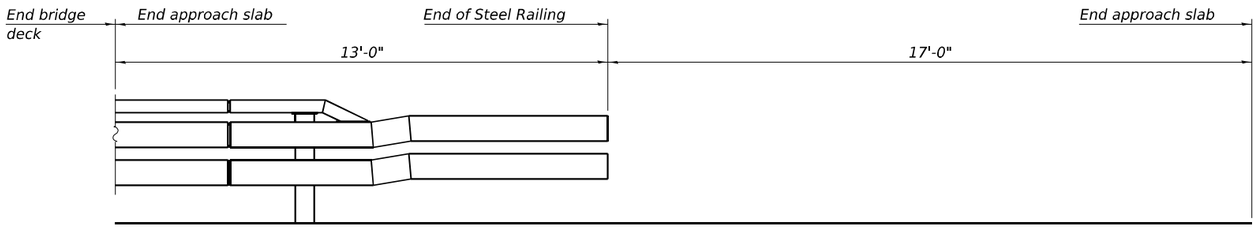

INSIDE ELEVATION OF RAILING

Notes:
1. The joint opening shall be adjusted for temperature per Article 520.04 of the Standard Specifications. However, since this detail is for jointless structures, the length of bridge used to calculate the adjustment shall be equal to half the total bridge length plus the length of the bridge approach slab.
2. Approach slab shall be paid for as Concrete Superstructure (Approach Slab).
3. Approach footing concrete shall be paid for as Concrete Structures.
4. The approach footing maximum applied service bearing pressure (Qmax) = 2.0 ksf.
5. Cost of excavation for approach footing included with Concrete Structures.
6. For Granular Backfill for Structures and drainage treatment details, see sheet 2 of 23.
7. For railing details, see sheet 11 thru 14 of 23.

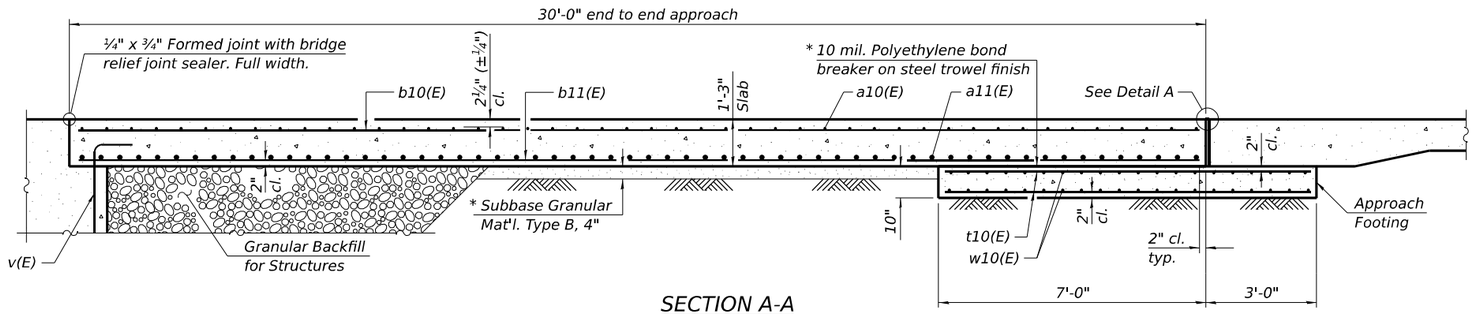

SECTION A-A

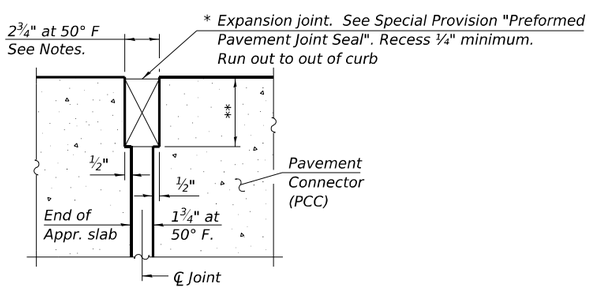

DETAIL A

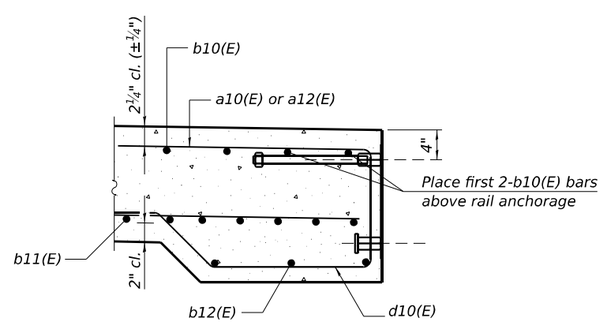

SECTION B-B

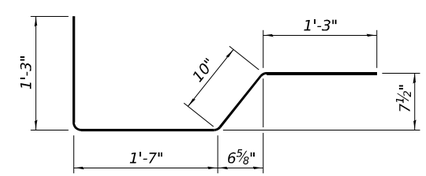

BAR d10(E)

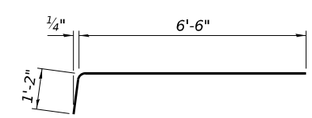

BAR a12(E)

* Cost included with Concrete Superstructure (Approach Slab).

** Per manufacturer recommendations

TWO APPROACHES
BILL OF MATERIAL

Bar	No.	Size	Length	Shape
a10(E)	184	#5	15'-8"	
a11(E)	240	#8	15'-8"	
a12(E)	52	#5	7'-8"	
b10(E)	100	#5	29'-8"	
b11(E)	156	#9	29'-8"	
b12(E)	12	#5	6'-8"	
d10(E)	36	#5	4'-11"	
t10(E)	136	#4	9'-8"	
w10(E)	160	#5	15'-8"	
Concrete Structures			Cu. Yd.	19.8
Concrete Superstructure (Approach Slab)			Cu. Yd.	89.3
Reinforcement Bars, Epoxy Coated			Pound	36,060

FILE NAME: L:\IDOT\2200610-00\WO_11\78793\CADD Data\Bridge\CADD Sheets\0770042-78793-010-Bridge Approach Slab Details.dgn

CMT
License No. 184-000613 © Copyright CMT, Inc.

USER NAME = vtan	DESIGNED - VT	REVISED -	
	DRAWN - VT	REVISED -	
	CHECKED - DAC	REVISED -	
PLOT DATE = 4/14/2025	DATE - 04/18/2025	REVISED -	

STATE OF ILLINOIS
DEPARTMENT OF TRANSPORTATION

BRIDGE APPROACH SLAB DETAILS
STRUCTURE NO. 077-0042

SCALE: SHEET 10 OF 23 SHEETS STA. TO STA.

F.A.S. RTE.	SECTION	COUNTY	TOTAL SHEETS	SHEET NO.
2937	116B-1	PULASKI	76	39
		CONTRACT NO. 78793		
		ILLINOIS	FED. AID PROJECT	

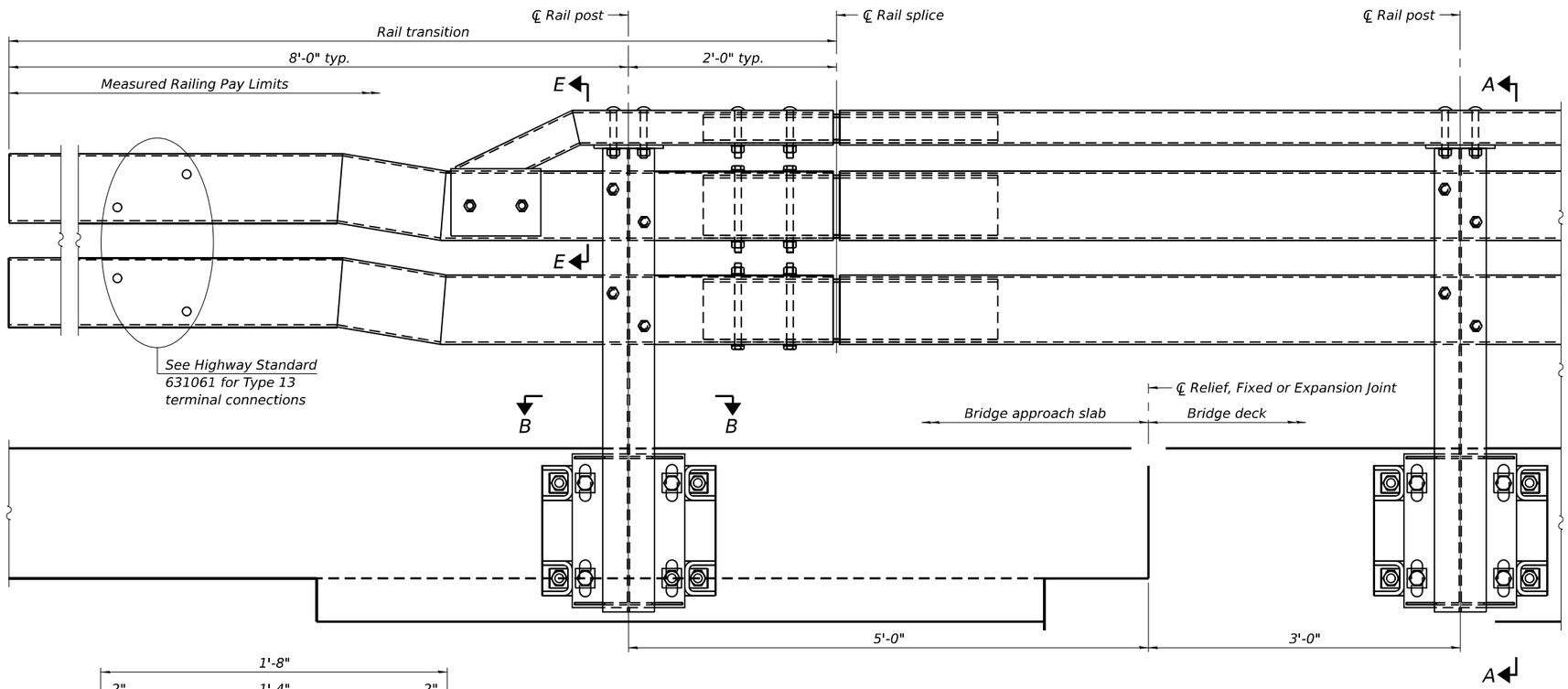

OUTSIDE ELEVATION OF RAIL

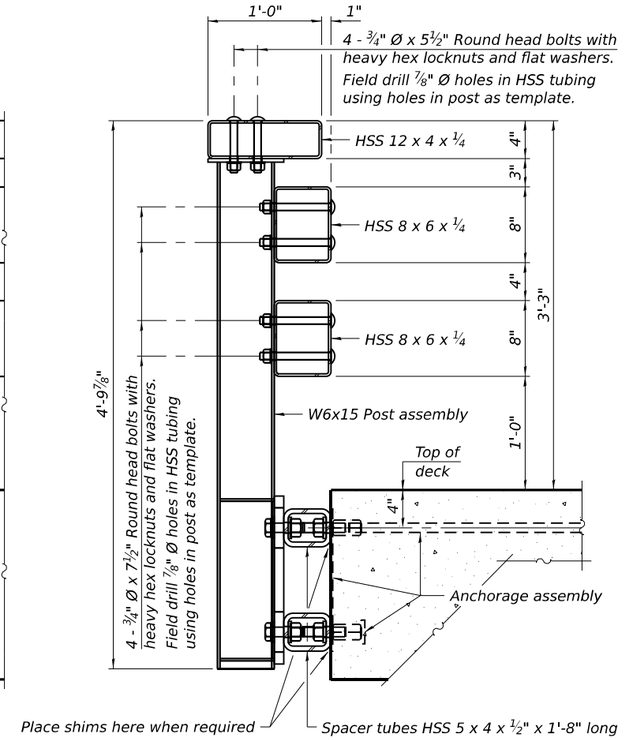

SECTION A-A

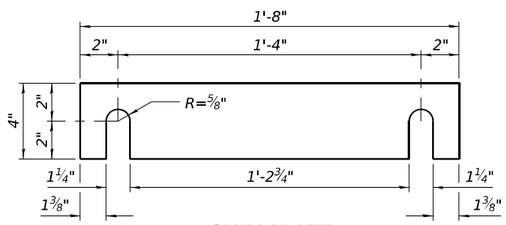

SHIM PLATE

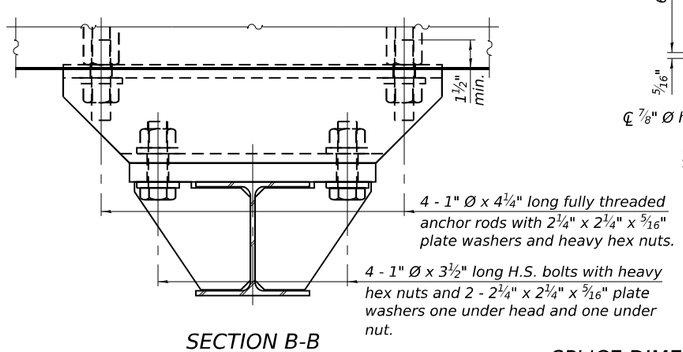

SECTION B-B

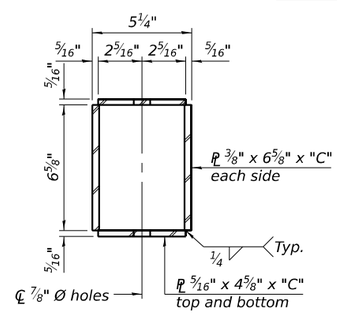

SECTION C-C

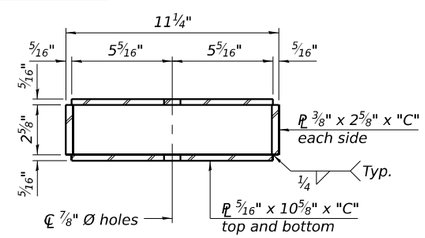

SECTION D-D

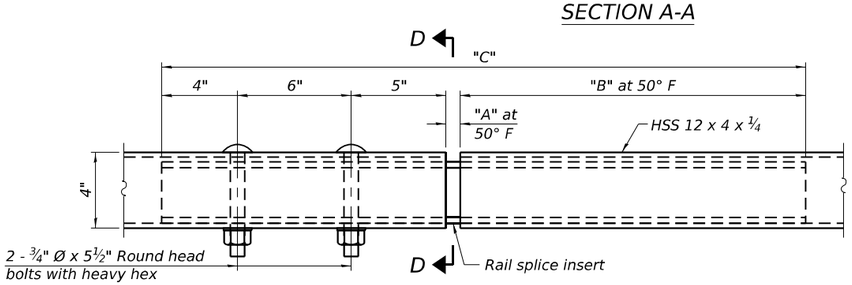

TOP RAIL SPLICE ELEVATION

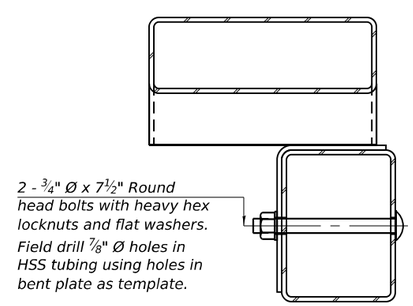

SECTION E-E

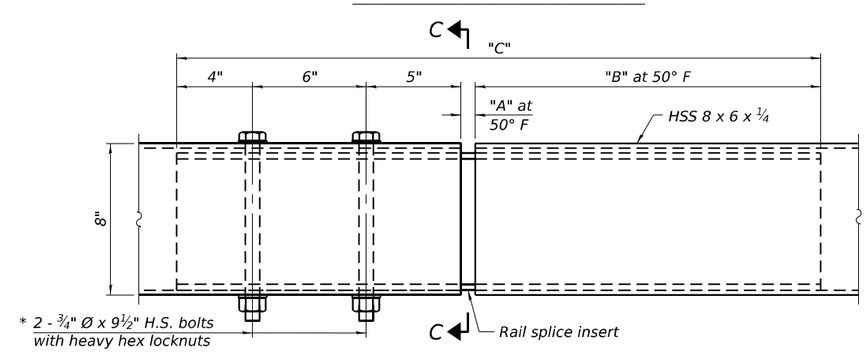

MIDDLE & BOTTOM RAIL SPLICE ELEVATION

* Bolt orientation shown for middle rail. Flip for bottom rail.

RAILING CRITERIA

MASH 2016 Test Level	4
Rail system weight (plf)	120
Max post spacing	8'-0"

SPLICE DIMENSIONS

Location	T	A	B	C
All locs. not over exp. jts.	0	½"	1'-6"	2'-9½"
Over Strip Seal Jt.	≤4"	2½"	1'-8"	3'-1½"
Over Finger or Modular Jt.	≤9½"	5½"	1'-10¾"	3'-7¼"
Over Finger or Modular Jt.	≤15"	8¼"	2'-1½"	4'-0¾"

T = ; total movement along centerline of roadway at expansion joint.

R-40BD 5-15-2023

(Sheet 1 of 4)

FILE NAME: L:\IDOT\22006610-00\WO_11\78793\CADD Data\Bridge\CADD Sheets\0770042-78793-011-Steel Railing, Type IL-OH - I.dgn

CMT
License No. 184-000613 © Copyright CMT, Inc.

USER NAME = vtan	DESIGNED - VT	REVISED -
	DRAWN - VT	REVISED -
	CHECKED - DAC	REVISED -
PLOT DATE = 2/12/2025	DATE - 04/18/2025	REVISED -

STATE OF ILLINOIS
DEPARTMENT OF TRANSPORTATION

STEEL RAILING, TYPE IL-OH
STRUCTURE NO. 077-0042

SCALE: SHEET 11 OF 23 SHEETS STA. TO STA.

F.A.S. RTE.	SECTION	COUNTY	TOTAL SHEETS	SHEET NO.
2937	116B-1	PULASKI	76	40

CONTRACT NO. 78793

ILLINOIS FED. AID PROJECT

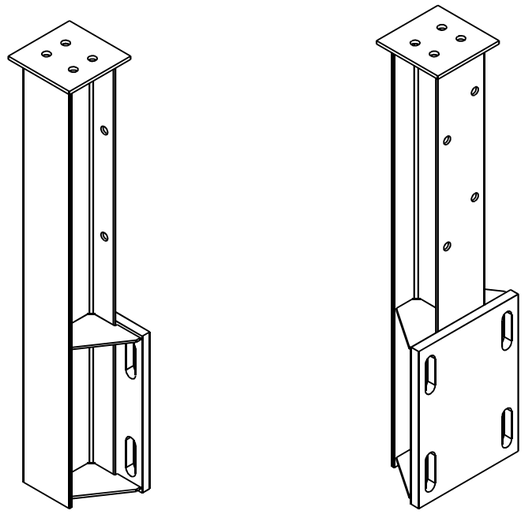

ISOMETRIC VIEWS POST ASSEMBLY

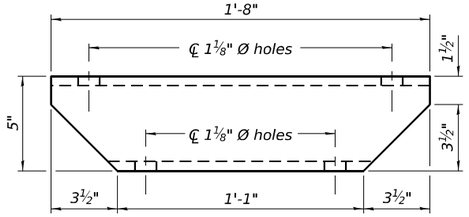

SPACER TUBE PLAN

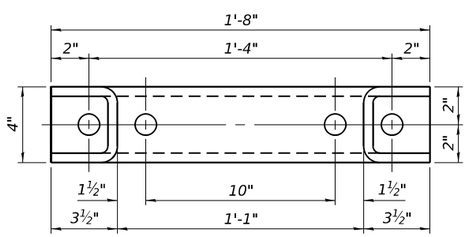

SPACER TUBE ELEVATION

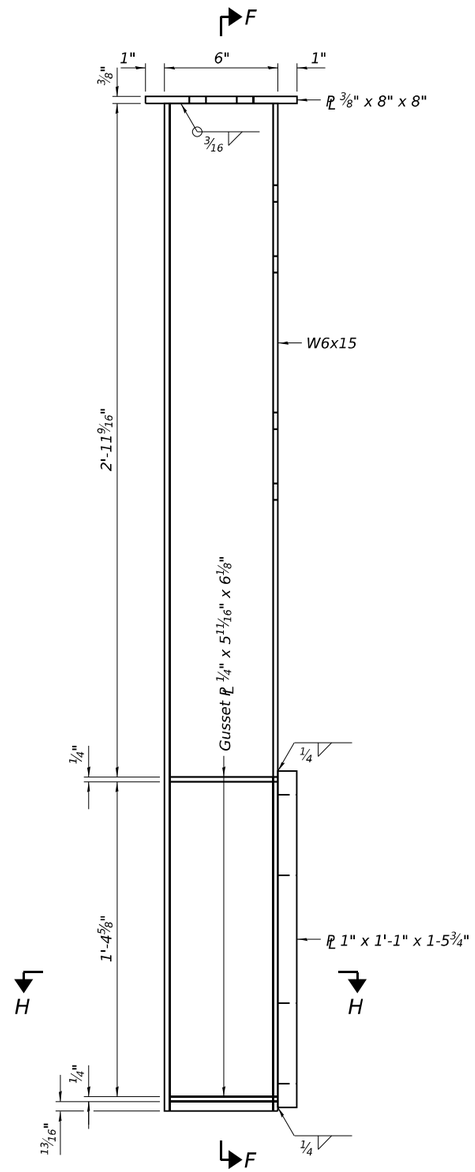

SIDE ELEVATION POST ASSEMBLY

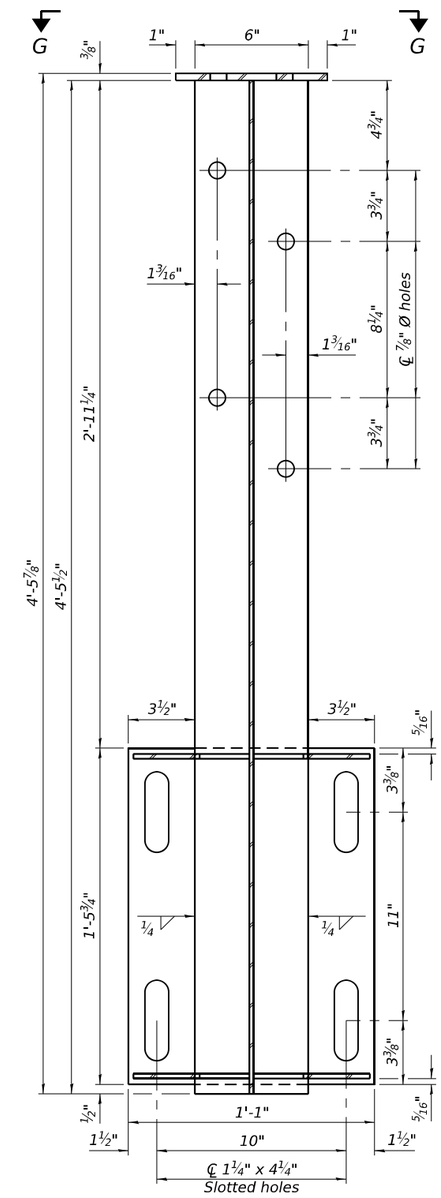

SECTION F-F

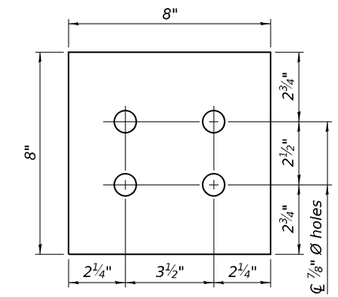

VIEW G-G
(Showing top plate)

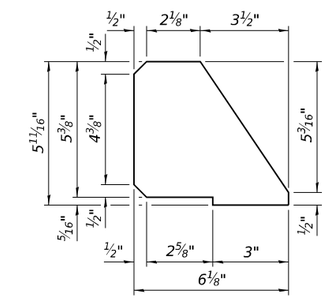

GUSSET PLATE

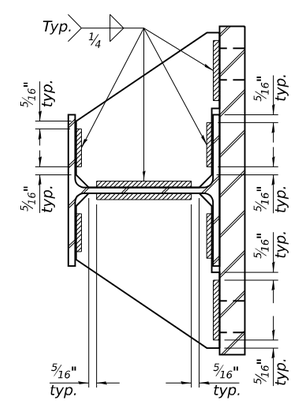

SECTION H-H
(Showing gusset plate welds)

R-40BD 5-15-2023

(Sheet 2 of 4)

FILE NAME: L:\IDOT\2200661O-00\WO_11\78793\CADD Data\Bridge\CADD Sheets\0770042-78793-012-Steel Railing, Type IL-OH - II.dgn

CMT
License No. 184-000613 © Copyright CMT, Inc.

USER NAME = vtan	DESIGNED - VT	REVISED -	
	DRAWN - VT	REVISED -	
	CHECKED - DAC	REVISED -	
PLOT DATE = 2/12/2025	DATE - 04/18/2025	REVISED -	

STATE OF ILLINOIS
DEPARTMENT OF TRANSPORTATION

STEEL RAILING, TYPE IL-OH
STRUCTURE NO. 077-0042

SCALE: SHEET 12 OF 23 SHEETS STA. TO STA.

F.A.S. RTE.	SECTION	COUNTY	TOTAL SHEETS	SHEET NO.
2937	116B-1	PULASKI	76	41
		CONTRACT NO. 78793		
	ILLINOIS	FED. AID PROJECT		

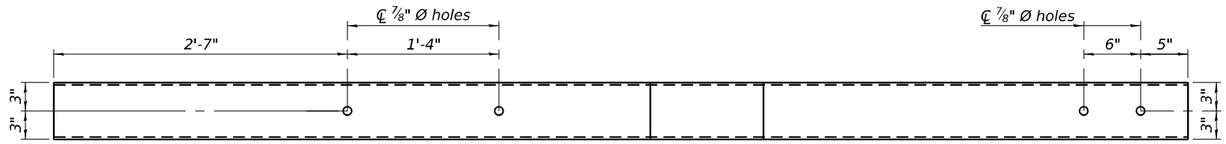

PLAN OF MIDDLE AND BOTTOM RAIL TRANSITION

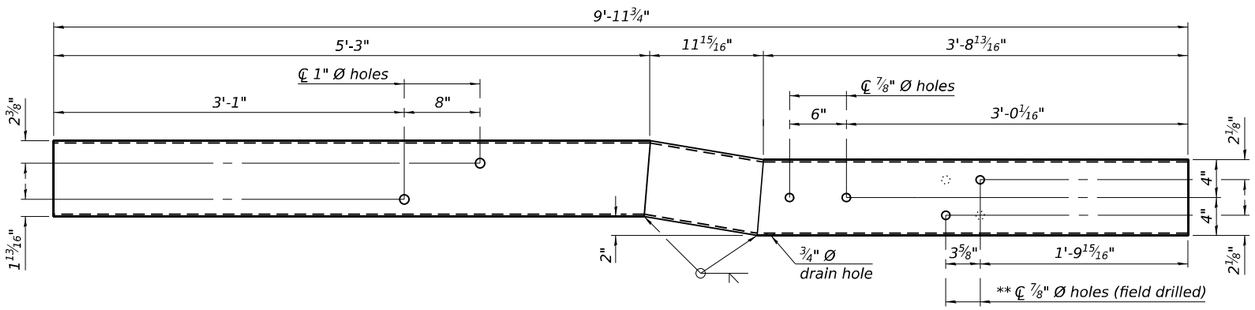

INSIDE ELEVATION OF LEFT MIDDLE RAIL TRANSITION

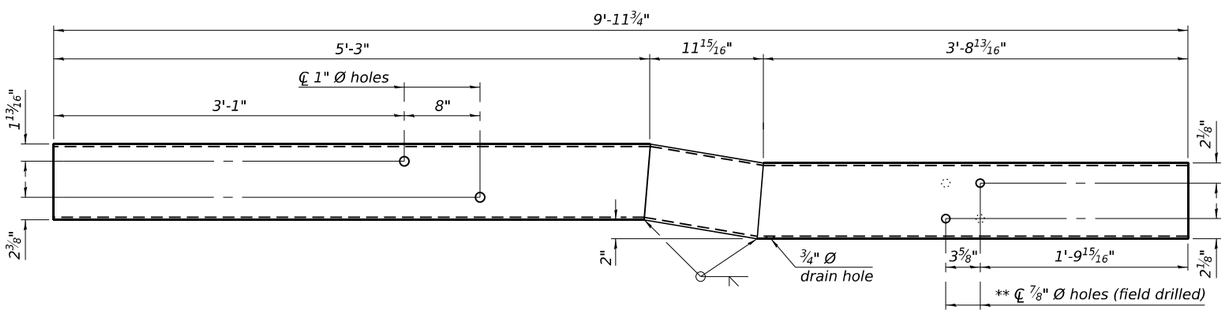

INSIDE ELEVATION OF LEFT BOTTOM RAIL TRANSITION

** Hole orientation is flipped as shown with the dashed holes for the right side piece.

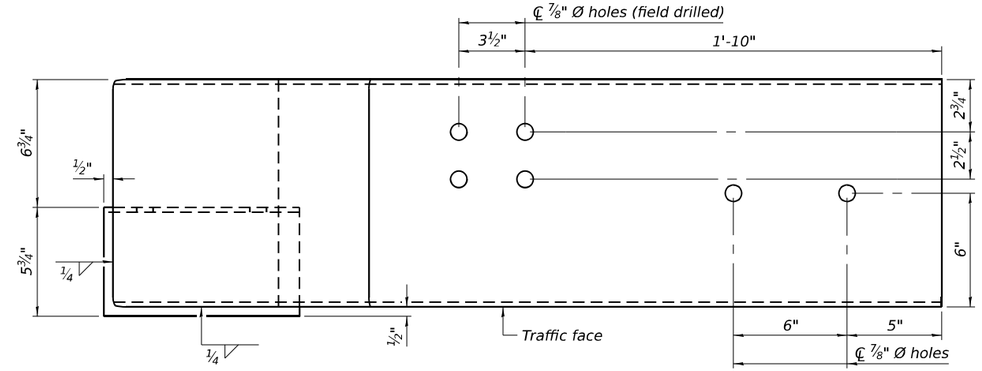

PLAN OF LEFT TOP RAIL TERMINATION ASSEMBLY

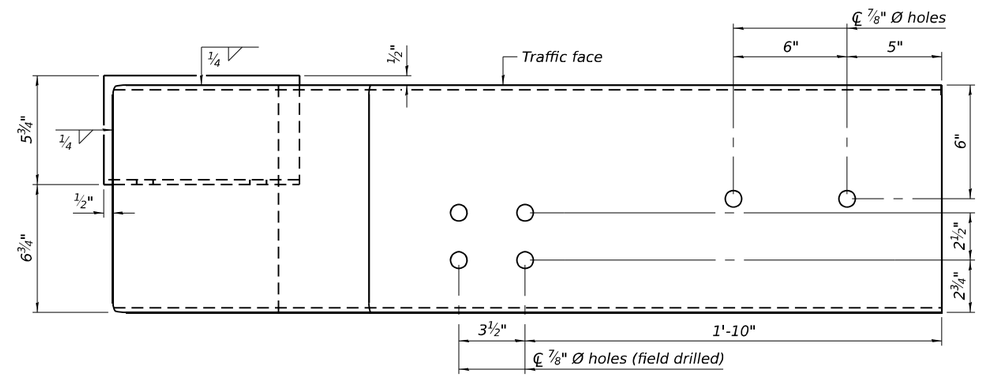

PLAN OF RIGHT TOP RAIL TERMINATION ASSEMBLY

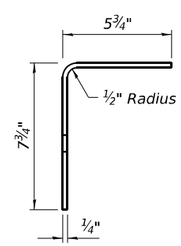

VIEW I-I

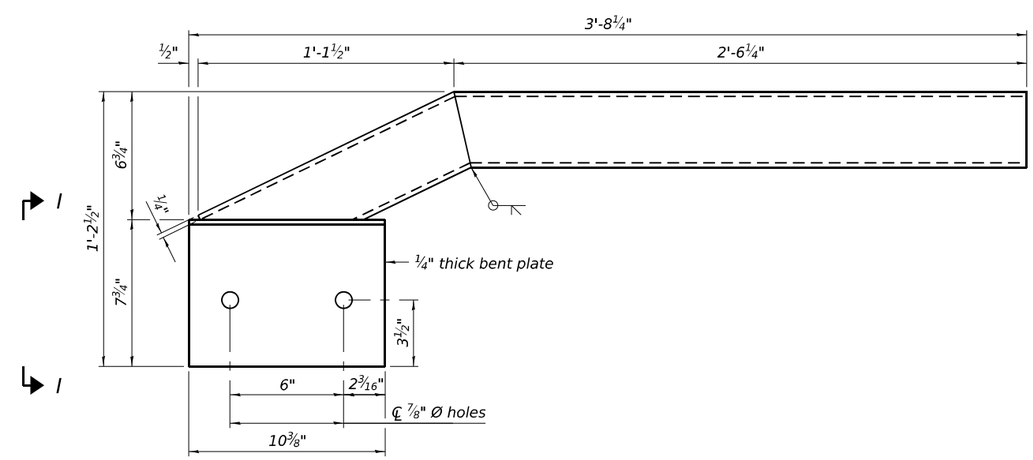

INSIDE ELEVATION OF LEFT TOP RAIL TERMINATION ASSEMBLY

(Right Similar)

R-40BD 5-15-2023

(Sheet 3 of 4)

FILE NAME: L:\IDOT\2200610-00\WO_11\78793\CADD Data\Bridge\CADD Sheets\0770042-78793-013-Steel Railing, Type IL-OH - III.dgn

CMT License No. 184-000613 © Copyright CMT, Inc.

USER NAME = vtan	DESIGNED - VT	REVISED -	
	DRAWN - VT	REVISED -	
	CHECKED - DAC	REVISED -	
PLOT DATE = 2/12/2025	DATE - 04/18/2025	REVISED -	

STATE OF ILLINOIS
DEPARTMENT OF TRANSPORTATION

STEEL RAILING, TYPE IL-OH
STRUCTURE NO. 077-0042

SCALE: SHEET 13 OF 23 SHEETS STA. TO STA.

F.A.S. RTE.	SECTION	COUNTY	TOTAL SHEETS	SHEET NO.
2937	116B-1	PULASKI	76	42
		CONTRACT NO. 78793		
		ILLINOIS FED. AID PROJECT		

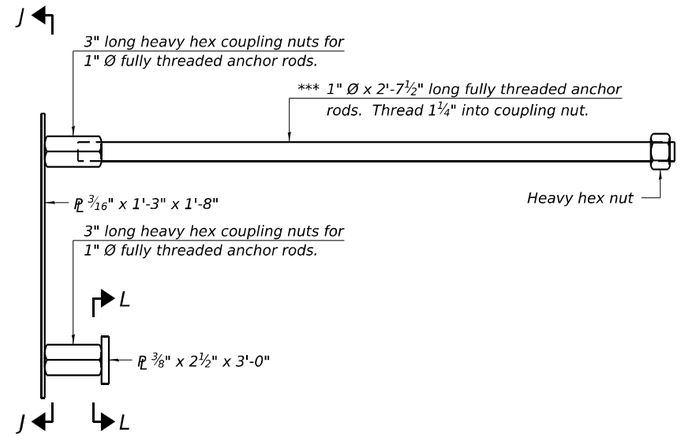

ANCHORAGE ASSEMBLY

*** For skewed bridge decks use 1" Ø x 1'-3" long fully threaded anchor rods at acute corners of bridge deck.

Notes:

All plates shall be AASHTO M270 grade 50.

All HSS tubing shall be ASTM A500 grade C.

All heavy hex nuts including heavy hex coupling nuts shall be according to ASTM A563 grade DH.

All fully threaded anchor rods shall be ASTM F1554 grade 105.

All round head bolts shall be ASTM A449.

All steel rail elements including shims shall be galvanized according to Article 509.05 of the Standard Specifications.

Rail splice inserts may be built out of 2 – ⅜" bent plates in lieu of the 4 plate rail splice inserts shown, provided the outside dimensions are matched.

A sufficient number shims of various thicknesses, built to the dimensions shown in the shim plate detail, shall be provided to adjust posts for plumbness and horizontal alignment. Cost included with Steel Railing, Type IL-OH.

The spacer tubes shall be fastened to the bridge deck and bridge approach slab snug tight and given an additional ⅓ turn. The 1" diameter high strength bolts used to connect the spacer tubes to the post assemblies shall be tightened according to Article 505.04(f)(2) of the Standard Specifications.

All HSS tubing serving as railing shall be CVN tested according to Article 1006.34(b) of the Standard Specifications.

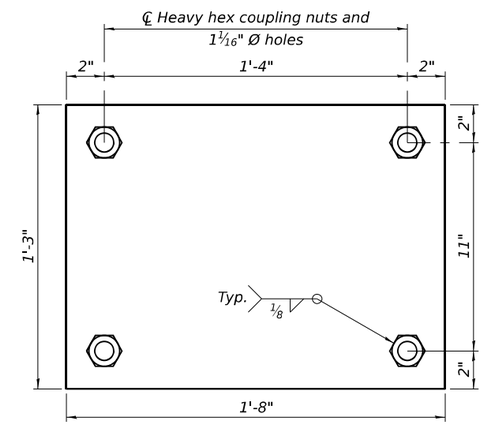

SECTION J-J

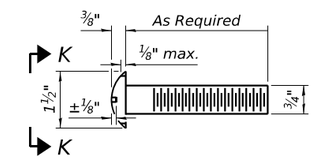

ROUND HEAD BOLT DETAIL

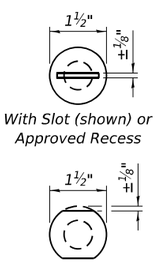

VIEW K-K

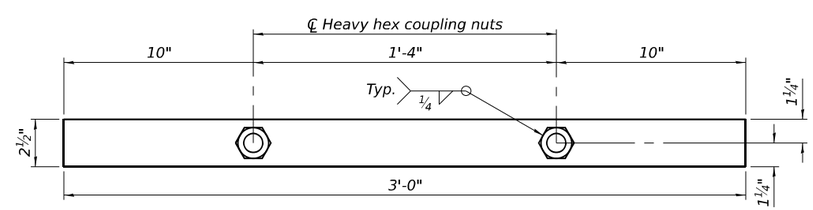

SECTION L-L

BILL OF MATERIAL

Item	Unit	Quantity
Steel Railing, Type IL-OH	Foot	219

R-40BD 5-15-2023

(Sheet 4 of 4)

FILE NAME: L:\IDOT\22006610-00\WO_11\78793\CADD Data\Bridge\CADD Sheets\0770042-78793-014-Steel Railing, Type IL-OH - IV.dgn

CMT License No. 184-000613

USER NAME = vtan	DESIGNED - VT	REVISED -	
	DRAWN - VT	REVISED -	
	CHECKED - DAC	REVISED -	
PLOT DATE = 2/12/2025	DATE - 04/18/2025	REVISED -	

STATE OF ILLINOIS
DEPARTMENT OF TRANSPORTATION

STEEL RAILING, TYPE IL-OH
STRUCTURE NO. 077-0042

SCALE: SHEET 14 OF 23 SHEETS STA. TO STA.

F.A.S. RTE.	SECTION	COUNTY	TOTAL SHEETS	SHEET NO.
2937	116B-1	PULASKI	76	43

CONTRACT NO. 78793

ILLINOIS FED. AID PROJECT

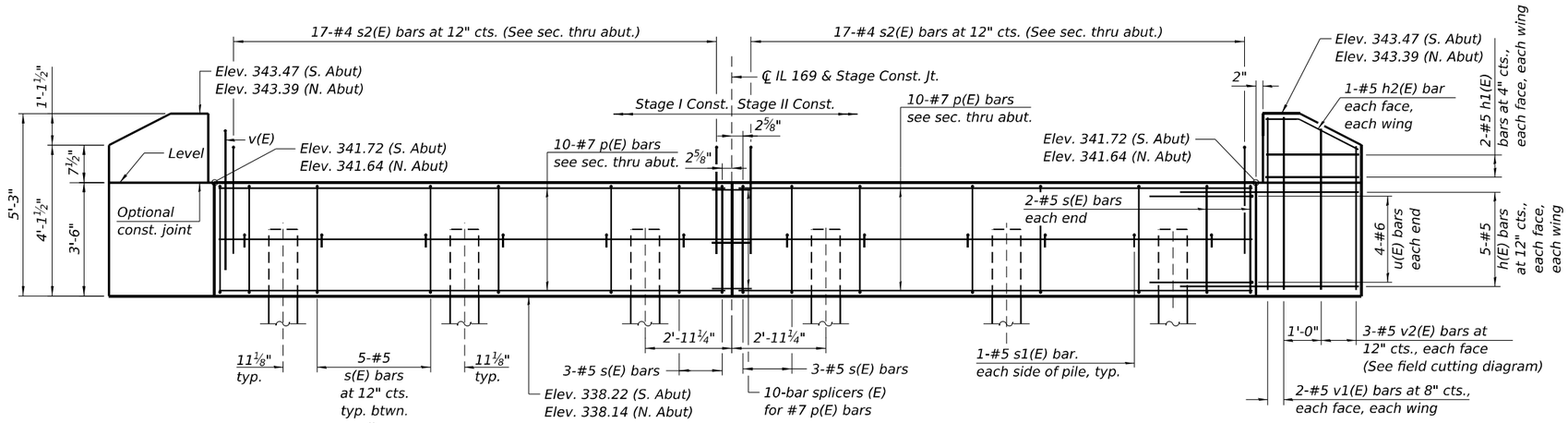

ELEVATION

(South abutment shown, north abutment similar)

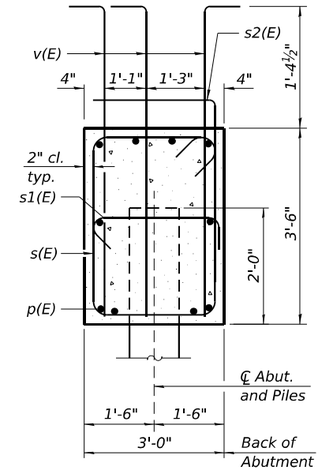

SEC. THRU ABUT.

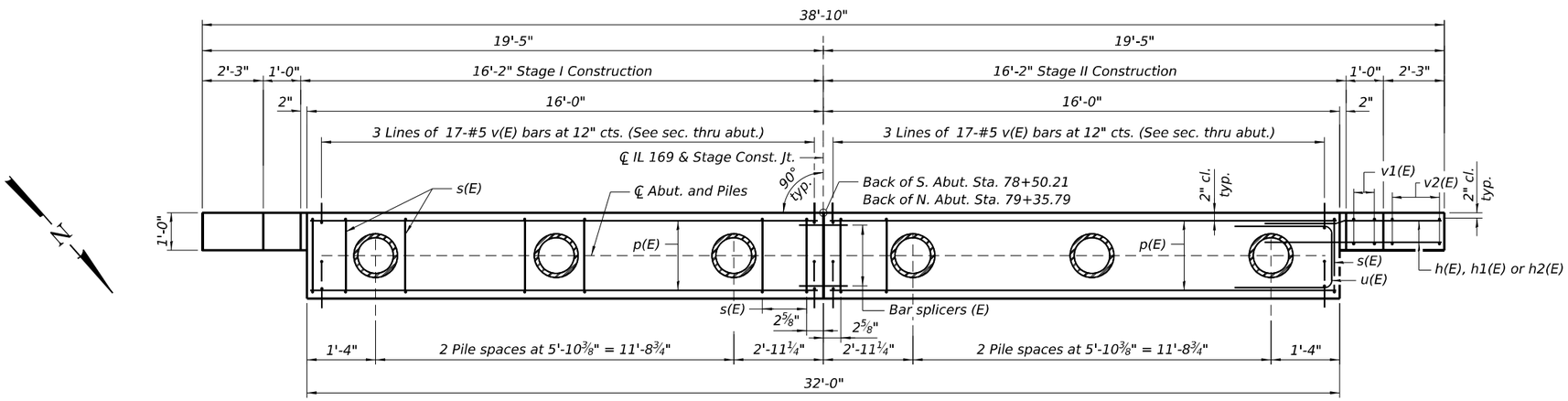

PLAN

(South abutment shown, north abutment similar)

BILL OF MATERIAL
TWO ABUTMENTS

Bar	No.	Size	Length	Shape
h(E)	40	#5	7'-0"	
h1(E)	16	#5	2'-11"	
h2(E)	8	#5	3'-3"	
p(E)	40	#7	15'-8"	
s(E)	60	#5	12'-7"	
s1(E)	24	#5	3'-8"	
s2(E)	68	#4	6'-3"	
u(E)	16	#6	11'-2"	
v(E)	204	#5	5'-8"	
v1(E)	16	#5	4'-11"	
v2(E)	12	#5	8'-4"	
Structure Excavation			Cu. Yd.	322
Concrete Structures			Cu. Yd.	27.3
Reinforcement Bars, Epoxy Coated			Pound	4,480
Furnishing Metal Shell Piles 14"x0.250"			Foot	582
Driving Piles			Foot	582
Test Pile Metal Shells			Each	1

Notes:
1. For details of piles see sheet 17 of 23.
2. For bar splicer details see sheet 18 of 23.

NORTH ABUT. PILE DATA

Type: Metal Shell Piles 14" diam. x 0.25"
Nominal Required Bearing: 350 kips
Factored Resistance Available: 193 kips
Est. Length: 57 ft.
No. Production Piles: 6
No. Test Piles: 0

SOUTH ABUT. PILE DATA

Type: Metal Shell Piles 14" diam. x 0.25"
Nominal Required Bearing: 309 kips
Factored Resistance Available: 170 kips
Est. Length: 48 ft.
No. Production Piles: 5
No. Test Piles: 1

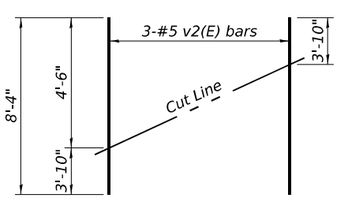

FIELD CUTTING DIAGRAM

Order v2(E) full length. Cut as shown and use remainder of bars in opposite wing.

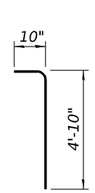

BAR v(E)

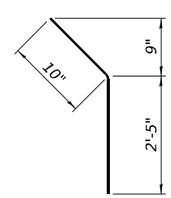

BAR h2(E)

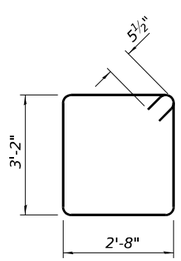

BAR s(E)

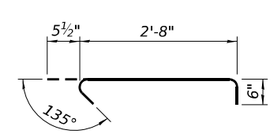

BAR s1(E)

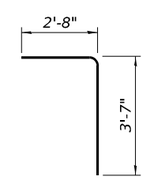

BAR s2(E)

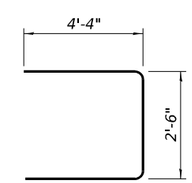

BAR u(E)

MODEL: Abutments [Sheet]
FILE NAME: L:\IDOT\22006610-00\WO_11\78793\CADD Data\Bridge\CADD Sheets\0770042-78793-015-Abutments.dgn

CMT
License No. 184-000613

USER NAME = vtan	DESIGNED - VT/DH	REVISED -	
	DRAWN - VT	REVISED -	
	CHECKED - DAC/JTH	REVISED -	
PLOT DATE = 4/14/2025	DATE - 04/18/2025	REVISED -	

STATE OF ILLINOIS
DEPARTMENT OF TRANSPORTATION

ABUTMENTS
STRUCTURE NO. 077-0042

SCALE: | SHEET 15 OF 23 SHEETS | STA. | TO STA.

F.A.S. RTE.	SECTION	COUNTY	TOTAL SHEETS	SHEET NO.
2937	116B-1	PULASKI	76	44

CONTRACT NO. 78793

ILLINOIS | FED. AID PROJECT

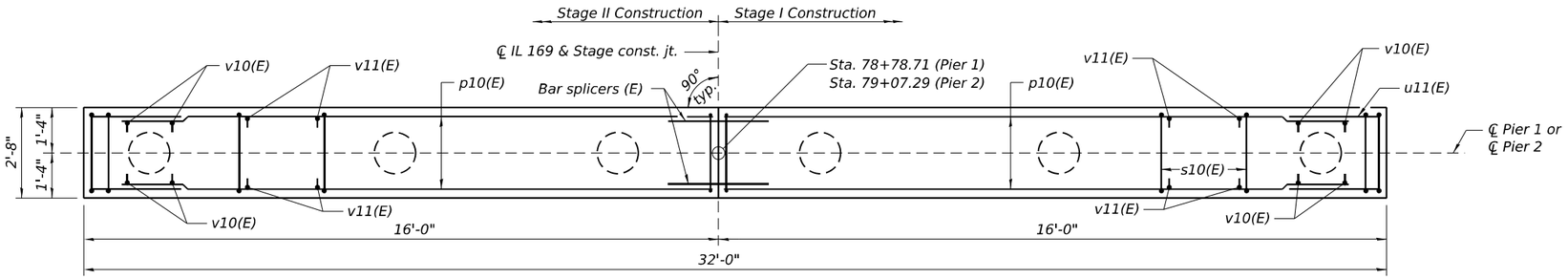

TOP PLAN

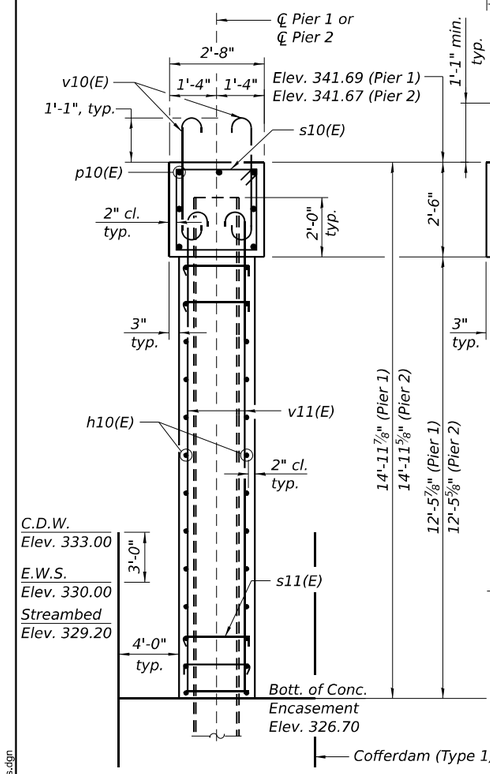

SECTION THRU PIER

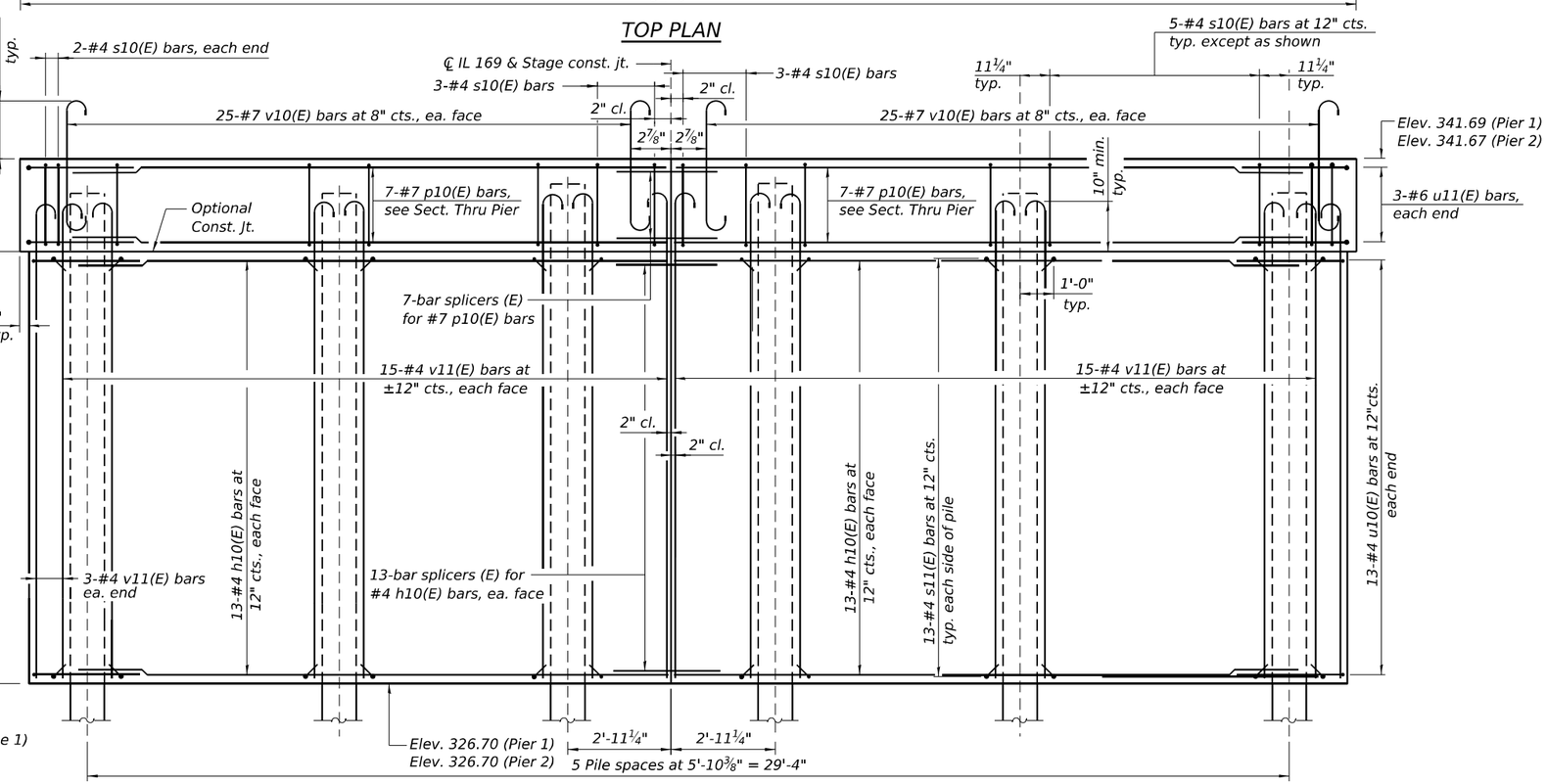

ELEVATION
(Looking North)

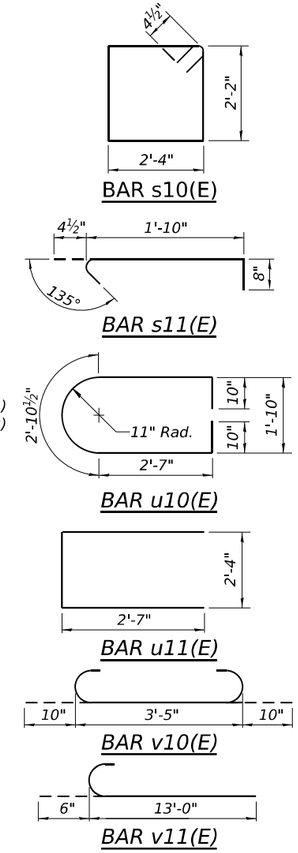

PIER 1 PILE DATA

Type: Metal Shell Piles 14" diam. x 0.25"
Nominal Required Bearing: 324 kips
Factored Resistance Available: 178 kips
Est. Length: 58 ft.
No. Production Piles: 6
No. Test Piles: 0

PIER 2 PILE DATA

Type: Metal Shell Piles 14" diam. x 0.25"
Nominal Required Bearing: 328 kips
Factored Resistance Available: 181 kips
Est. Length: 68 ft.
No. Production Piles: 5
No. Test Piles: 1

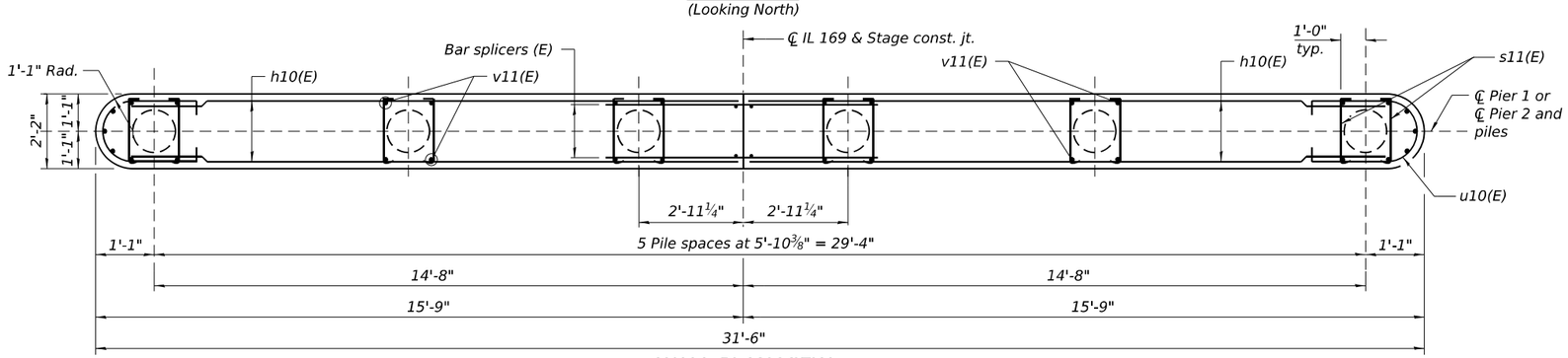

WALL PLAN VIEW

BILL OF MATERIAL
TWO PIERS

Bar	No.	Size	Length	Shape
h10(E)	104	#4	14'-6"	
p10(E)	28	#7	15'-8"	
s10(E)	60	#4	9'-9"	
s11(E)	312	#4	2'-11"	
u10(E)	52	#4	9'-9"	
u11(E)	12	#6	7'-6"	
v10(E)	200	#7	5'-1"	
v11(E)	132	#4	13'-6"	
Cofferdam Excavation			Cu. Yd.	321
Cofferdam (Type 1) (Location - 1)			Each	1
Cofferdam (Type 1) (Location - 2)			Each	1
Concrete Structures			Cu. Yd.	78.0
Reinforcement Bars, Epoxy Coated			Pound	6,650
Furnishing Metal Shell Piles 14"x0.250"			Foot	688
Driving Piles			Foot	688
Test Pile Metal Shells			Each	1

Notes:
1. For details of piles, see sheet 17 of 23.
2. For bar splicer details, see sheet 18 of 23.

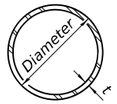

METAL SHELL PILE TABLE

Designation and outside diameter	Wall thickness t	Weight per foot (Lbs./ft.)	Inside volume (yd.³/ft.)
PP12	0.250"	31.40	0.0267
PP14	0.250"	36.75	0.0368
PP14	0.312"	45.65	0.0361
PP16	0.312"	52.32	0.0478
PP16	0.375"	62.64	0.0470

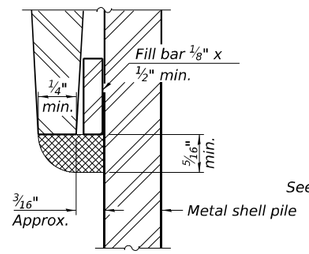

DETAIL A

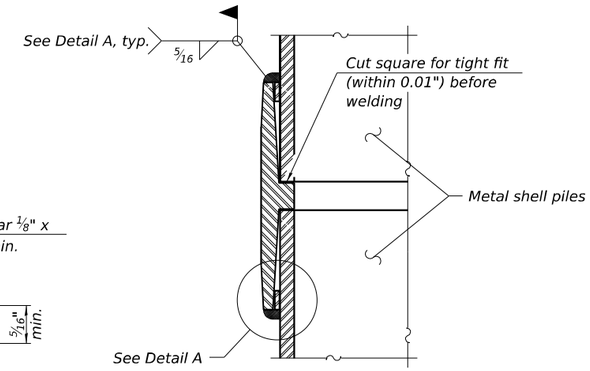

WELDED COMMERCIAL SPLICE

Notes:
The 1/8" x 1/2" min. fill bar may be constructed of 2 bars with a 1/8" max. gap between them.
Pile segments shall be driven to solid contact with splicer before welding.

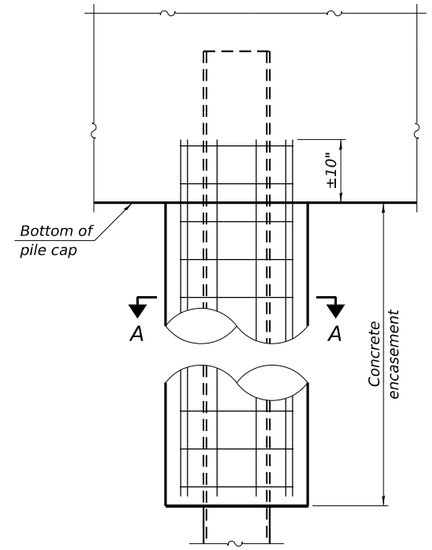

ELEVATION

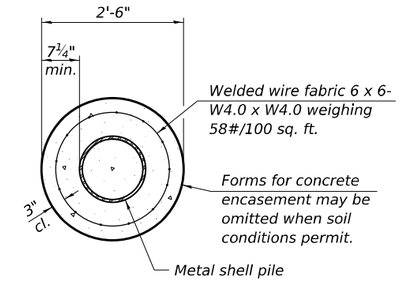

SECTION A-A

INDIVIDUAL PILE CONCRETE ENCASEMENT

(When specified)

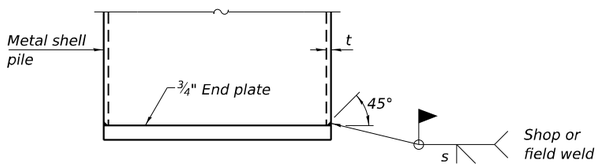

$s = t - \frac{1}{8}$"

END PLATE ATTACHMENT

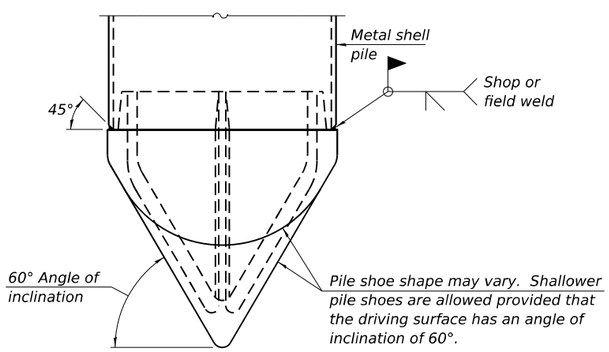

PILE SHOE ATTACHMENT

(When called for on the plans, the Contractor shall furnish metal shell pile shoes consisting of a single piece conical pile point as shown. The pile shoes shall be cast in one piece steel according to either ASTM A 148 Grade 80-50 or AASHTO M 103 Grade 65-35 and shall provide full bearing over the full circumference of the metal shell pile. The pile shoe shall have tapered leads to assure proper alignment and fitting and shall be secured to the pile with a circumferential weld).

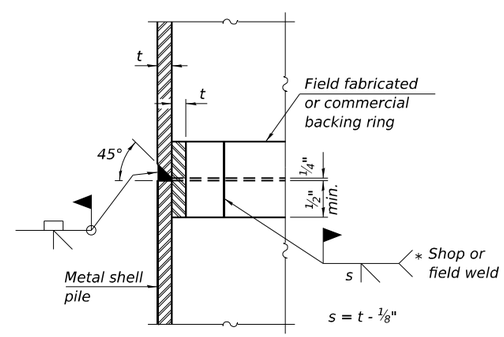

$s = t - \frac{1}{8}$"

COMPLETE PENETRATION WELD SPLICE

* Field fabricated backing ring may be made from pile shell by removing segment to allow reducing circumference and vertically rejoin with partial joint penetration weld.

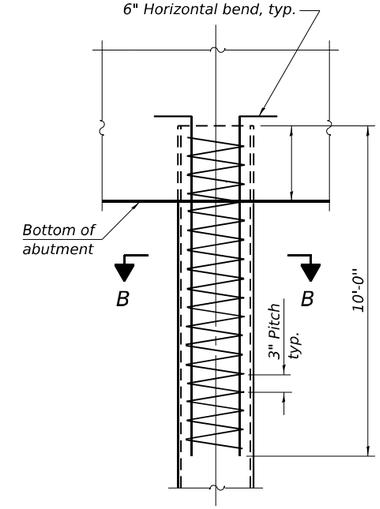

ELEVATION

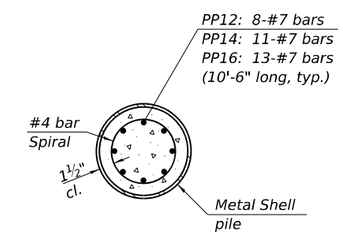

SECTION B-B

REINFORCEMENT AT ABUTMENTS

(Omit when concrete encasement is specified)

Note:
The metal shell piles shall be according to Article 1006.05 of the Standard Specifications.

F-MS 5-15-2023

FILE NAME: ...\IDOT\2200610-00\WO_11\78793\CADD Data\Bridge\CADD Sheets\0770042-78793-017-Metal Shell Details.dgn

CMT License No. 184-000613 © Copyright CMT, Inc.

USER NAME = vtan	DESIGNED - VT	REVISED -	
	DRAWN - VT	REVISED -	
	CHECKED - DAC	REVISED -	
PLOT DATE = 2/12/2025	DATE - 04/18/2025	REVISED -	

STATE OF ILLINOIS
DEPARTMENT OF TRANSPORTATION

METAL SHELL PILE DETAILS
STRUCTURE NO. 077-0042

SCALE: SHEET 17 OF 23 SHEETS STA. TO STA.

F.A.S. RTE.	SECTION	COUNTY	TOTAL SHEETS	SHEET NO.
2937	116B-1	PULASKI	76	46

CONTRACT NO. 78793

ILLINOIS FED. AID PROJECT

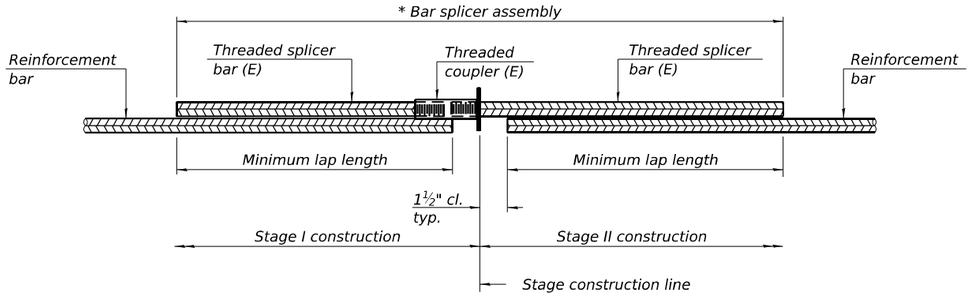

STANDARD BAR SPLICER ASSEMBLY PLAN

Only bar splicer assemblies as presented on the approved QPL list may be used.

Threaded splicer bar length = min. lap length + 1½" + thread length

* Epoxy not required on Bar Splicer Assembly components used in conjunction with black bars.

Location	Bar size	No. assemblies required	Minimum lap length
Slab Bottom	#6	168	4'-10"
Slab Top	#6	168	4'-0"
Slab Over Abutments	#4	6	2'-5"
Slab Over Piers	#4	6	2'-5"
Approach Slab Top	#5	92	3'-4"
Approach Slab Bottom	#8	120	4'-9"
Approach Slab Footing	#5	80	3'-0"
Abutment Caps	#7	20	5'-0"
Pier Caps	#7	14	5'-0"
Pier Wall	#4	52	2'-11"

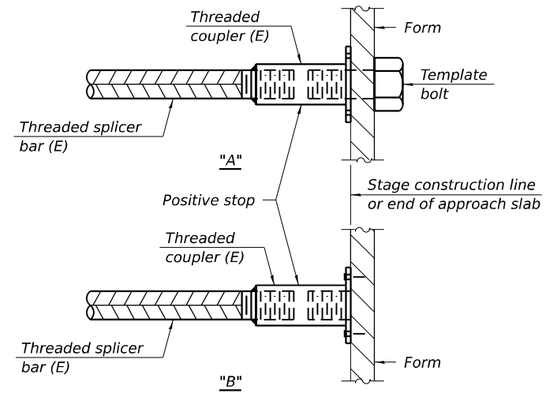

INSTALLATION AND SETTING METHODS

"A" : Set bar splicer assembly by means of a template bolt.
"B" : Set bar splicer assembly by nailing to wood forms or cementing to steel forms.
(E) : Indicates epoxy coating.

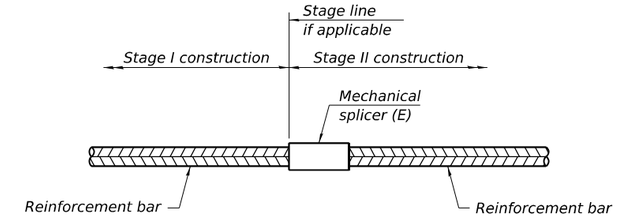

STANDARD MECHANICAL SPLICER

Location	Bar size	No. assemblies required

Notes:
Splicer bars shall be deformed with threaded ends and have a minimum 60 ksi yield strength.
All reinforcement shall be lapped and tied to the splicer bars.
Bar splicer assemblies shall be epoxy coated according to the requirements for reinforcement bars. See Section 508 of the Standard Specifications.
See approved list of bar splicer assemblies and mechanical splicers for alternatives.

BSD-1 5-15-2023

FILE NAME: L:\IDOT\2200661D-001\WO_11\78793\CADD Data\Bridge\CADD Sheets\0770042-78793-018-Bar Splicer Assembly and Mechanical Splicer Details.dgn

CMT License No. 184-000613 © Copyright CMT, Inc.

USER NAME = vtan	DESIGNED - VT	REVISED -	
	DRAWN - VT	REVISED -	
	CHECKED - DAC	REVISED -	
PLOT DATE = 2/12/2025	DATE - 04/18/2025	REVISED -	

STATE OF ILLINOIS
DEPARTMENT OF TRANSPORTATION

BAR SPLICER ASSEMBLY AND MECHANICAL SPLICER DETAILS
STRUCTURE NO. 077-0042

SCALE: SHEET 18 OF 23 SHEETS STA. TO STA.

F.A.S. RTE.	SECTION	COUNTY	TOTAL SHEETS	SHEET NO.
2937	116B-1	PULASKI	76	47

CONTRACT NO. 78793

ILLINOIS FED. AID PROJECT

Illinois Department of Transportation
Division of Highways
District 9

SOIL BORING LOG

Date 4/23/19

ROUTE IL 169 DESCRIPTION Structure over stream LOGGED BY L. Estel

SECTION LOCATION 0.4 mi West of Karnak (East Abut.), SEC. 16, TWP. 14S, RNG. 2E, PM

COUNTY Pulaski DRILLING METHOD Hollow stem auger (8" O.D., 3.25" I.D.) HAMMER TYPE Auto SPT 140 lb

STRUCT. NO. 077-0023
Station 78+93

BORING NO. 1-S
Station 79+50
Offset 7.0ft RT
Ground Surface Elev. 343.1 ft

Surface Water Elev. 330.4 ft
Stream Bed Elev. 329.0 ft

Groundwater Elev.:
First Encounter 293.1 ft
Upon Completion 323.1 ft
After ____ Hrs. ____ ft

Description	Elev.	DEPTH (ft)	BLOWS	UCS Qu (tsf)	MOIST (%)
Cored Pavement, 7" HMA over 7" CONCRETE	341.90				
M. Stiff Grey, Moist CLAY with ORGANICS					
			1		
			2	1.0	25
		-5	2	B	
	334.60		WOH		
V. Stiff Grey, Moist CLAY			WOH	0.5	28
			WOH	B	
			1		
			2	2.1	23
		-10	3	B	
	332.10				
Stiff Grey, Moist CLAY			1		
			3	1.2	24
			4	B	
	329.60				
V. Stiff Brown and Grey, Moist CLAY (Note 1)			2		
			4	3.5	25
		-15	6	S	
			1		
			5	3.5	26
			5	B	
			1		
			4	3.7	23
		-20	6	B	
V. Stiff Brown and Grey, Moist CLAY (Note 1) *(continued)*			1		
			5	2.3	27
			5	B	
			1		
			2	2.1	25
		-25	4	B	
	317.10				
Stiff Brown and Grey, Moist CLAY (Note 1)			1		
			2	1.2	26
			3	B	
	314.60				
Stiff Browish Grey, Moist CLAY LOAM with pockets of Wet CLAY LOAM (Note 1)			1		
			2	1.3	24
		-30	3	B	
	312.10				
V. Stiff Brownish Grey, V. Moist CLAY (Note 1)			1		
			3	2.7	26
			3	B	
	309.60				
Stiff Grey, V. Moist CLAY (Note 1)			1		
			3	1.8	27
		-35	3	B	
	307.10				
V. Stiff Grey, V. Moist CLAY with pockets of Wet CLAY (Note 1)			WOH		
			WOH	3.1	26
			2	B	
	304.60				
Stiff Grey, V. Moist CLAY (Note 1)			1		
			1	1.2	30
		-40	3	B	

The Unconfined Compressive Strength (UCS) Failure Mode is indicated by (B-Bulge, S-Shear, P-Penetrometer, E-Estimated)
Abbreviations W.O.H - Sampler Advanced By Weight of Hammer, W.O.P - Advanced by Weight of Pipe, B.S. - Before Seating
The SPT (N value) is the sum of the last two blow values in each sampling zone (AASHTO T206) BBS, from 137 (Rev. 8-99)

File Name S:\MATERIALS GEOTECHNICAL UNIT\BORING LOGS USING GINT\STATE STRUCTURES\PULASKI\077-0023.GPJ Data Template D6TEMPLT.GDT Date Printed 8/12/19
Latitude 37.2892039 Longitude -88.9952881 Datum NAD83 Job Number

Illinois Department of Transportation
Division of Highways
District 9

SOIL BORING LOG

Date 4/23/19

ROUTE IL 169 DESCRIPTION Structure over stream LOGGED BY L. Estel

SECTION LOCATION 0.4 mi West of Karnak (East Abut.), SEC. 16, TWP. 14S, RNG. 2E, PM

COUNTY Pulaski DRILLING METHOD Hollow stem auger (8" O.D., 3.25" I.D.) HAMMER TYPE Auto SPT 140 lb

STRUCT. NO. 077-0023
Station 78+93

BORING NO. 1-S
Station 79+50
Offset 7.0ft RT
Ground Surface Elev. 343.1 ft

Surface Water Elev. 330.4 ft
Stream Bed Elev. 329.0 ft

Groundwater Elev.:
First Encounter 293.1 ft
Upon Completion 323.1 ft
After ____ Hrs. ____ ft

Description	Elev.	DEPTH (ft)	BLOWS	UCS Qu (tsf)	MOIST (%)
Stiff Grey, V. Moist CLAY (Note 1) *(continued)*					
			1		
		-45	1	1.6	25
			3	B	
	294.10				
M. Stiff Grey, Moist CLAY (Note 1)			2		
		-50	2	0.7	24
			3	B	
	289.10				
M. Stiff Grey, V. Moist to Wet SANDY LOAM (non-plastic) 52% SAND, 41% SILT, 7% CLAY (Lab 28)			1		
		55	2	0.6	
			2	B	
	284.10				
			1		
		-60	2	2.3	21
V. Stiff Grey, V. Moist CLAY to CLAY LOAM (Note 1) *(continued)*			3	B	
	279.10				
Stiff Grey, V. Moist to Wet CLAY			1		
		-65	4	1.3	29
			5	B	
	274.10				
Stiff Grey, Moist CLAY with Brown and Red Fine SANDSTONE GRAVEL			3		
		-70	4	1.4	18
			7	B	
	269.10				
V. Stiff Reddish Brown, Moist CLAY with Brown and Red Fine SANDSTONE GRAVEL			1		
		-75	4	2.3	23
			4	B	
	264.10				
		-80	3	1.4	17

The Unconfined Compressive Strength (UCS) Failure Mode is indicated by (B-Bulge, S-Shear, P-Penetrometer, E-Estimated)
Abbreviations W.O.H - Sampler Advanced By Weight of Hammer, W.O.P - Advanced by Weight of Pipe, B.S. - Before Seating
The SPT (N value) is the sum of the last two blow values in each sampling zone (AASHTO T206) BBS, from 137 (Rev. 8-99)

File Name S:\MATERIALS GEOTECHNICAL UNIT\BORING LOGS USING GINT\STATE STRUCTURES\PULASKI\077-0023.GPJ Data Template D6TEMPLT.GDT Date Printed 8/12/19
Latitude 37.2892039 Longitude -88.9952881 Datum NAD83 Job Number

Illinois Department of Transportation
Division of Highways
District 9

SOIL BORING LOG

Date 4/23/19

ROUTE IL 169 DESCRIPTION Structure over stream LOGGED BY L. Estel

SECTION LOCATION 0.4 mi West of Karnak (East Abut.), SEC. 16, TWP. 14S, RNG. 2E, PM

COUNTY Pulaski DRILLING METHOD Hollow stem auger (8" O.D., 3.25" I.D.) HAMMER TYPE Auto SPT 140 lb

STRUCT. NO. 077-0023
Station 78+93

BORING NO. 1-S
Station 79+50
Offset 7.0ft RT
Ground Surface Elev. 343.1 ft

Surface Water Elev. 330.4 ft
Stream Bed Elev. 329.0 ft

Groundwater Elev.:
First Encounter 293.1 ft
Upon Completion 323.1 ft
After ____ Hrs. ____ ft

Description	Elev.	DEPTH (ft)	BLOWS	UCS Qu (tsf)	MOIST (%)
Stiff Reddish Brown, Moist CLAY with Brown and Red Fine SANDSTONE GRAVEL *(continued)*			6	B	
		-85			
	254.10				
M. Stiff Reddish Brown, V. Moist CLAY with Fine Angular GRAVEL			1		
		-90	4 7	0.5 B	40
		95			
			1		
		-100	6	1.0	34

Description	Elev.	DEPTH (ft)	BLOWS	UCS Qu (tsf)	MOIST (%)
M. Stiff Reddish Brown, V. Moist CLAY with Fine Angular GRAVEL *(continued)*			5	P	
		-105			
			2		
		-110	7 2	0.6 B	36
		-115			
	224.10				
			7		
		-120	14	0.0	79

The Unconfined Compressive Strength (UCS) Failure Mode is indicated by (B-Bulge, S-Shear, P-Penetrometer, E-Estimated)
Abbreviations W.O.H - Sampler Advanced By Weight of Hammer, W.O.P - Advanced by Weight of Pipe, B.S. - Before Seating
The SPT (N value) is the sum of the last two blow values in each sampling zone (AASHTO T206) BBS, from 137 (Rev. 8-99)

File Name S:\MATERIALS GEOTECHNICAL UNIT\BORING LOGS USING GINT\STATE STRUCTURES\PULASKI\077-0023.GPJ Data Template D6TEMPLT.GDT Date Printed 8/12/19
Latitude 37.2892039 Longitude -88.9952881 Datum NAD83 Job Number

Illinois Department of Transportation
Division of Highways
District 9

SOIL BORING LOG

Date 4/23/19

ROUTE IL 169 DESCRIPTION Structure over stream LOGGED BY L. Estel

SECTION LOCATION 0.4 mi West of Karnak (East Abut.), SEC. 16, TWP. 14S, RNG. 2E, PM

COUNTY Pulaski DRILLING METHOD Hollow stem auger (8" O.D., 3.25" I.D.) HAMMER TYPE Auto SPT 140 lb

STRUCT. NO. 077-0023
Station 78+93

BORING NO. 1-S
Station 79+50
Offset 7.0ft RT
Ground Surface Elev. 343.1 ft

Surface Water Elev. 330.4 ft
Stream Bed Elev. 329.0 ft

Groundwater Elev.:
First Encounter 293.1 ft
Upon Completion 323.1 ft
After ____ Hrs. ____ ft

Description	Elev.	DEPTH (ft)	BLOWS	UCS Qu (tsf)	MOIST (%)
M. Dense Coarse SAND and Fine GRAVEL with V. Soft Reddish Brown, Wet CLAY Slurry 15% Fine SAND, 9% SILT, 15% CLAY, 61% Coarse SAND and Fine GRAVEL (Est. from visual ID & Lab 29 from Boring 2-S) *(continued)*	222.60		6	E	
(End of boring. Bore hole abandoned due to obstruction in lead auger that damaged two split spoon samplers.)		-125			
Note 1: Not Liquefiable, PI >= 12 based on visual ID and historical data					
Bottom of hole @ 120.5 ft					
Elevation referenced to PSM 75, IDOT Mon. @ Sta 75+00, 72 ft RT; EL. 341.54		-130			
To convert "N" values to "N60", multiply by 1.5		-135			
		-140			

The Unconfined Compressive Strength (UCS) Failure Mode is indicated by (B-Bulge, S-Shear, P-Penetrometer, E-Estimated)
Abbreviations W.O.H - Sampler Advanced By Weight of Hammer, W.O.P - Advanced by Weight of Pipe, B.S. - Before Seating
The SPT (N value) is the sum of the last two blow values in each sampling zone (AASHTO T206) BBS, from 137 (Rev. 8-99)

File Name S:\MATERIALS GEOTECHNICAL UNIT\BORING LOGS USING GINT\STATE STRUCTURES\PULASKI\077-0023.GPJ Data Template D6TEMPLT.GDT Date Printed 8/12/19
Latitude 37.2892039 Longitude -88.9952881 Datum NAD83 Job Number

Illinois Department of Transportation
Division of Highways
District 9

SOIL BORING LOG

Date 5/7/19

ROUTE IL 169 DESCRIPTION Structure over stream LOGGED BY L. Estel

SECTION LOCATION 0.4 mi West of Karnak (West Abut.), SEC. 16, TWP. 14S, RNG. 2E, PM

COUNTY Pulaski DRILLING METHOD Hollow stem auger (8" O.D., 3.25" I.D.) HAMMER TYPE Auto SPT 140 lb

STRUCT. NO. 077-0023
Station 78+93

BORING NO. 2-S
Station 78+35
Offset 6.0ft LT
Ground Surface Elev. 343.0 ft

Surface Water Elev. 330.4 ft
Stream Bed Elev. 329.0 ft

Groundwater Elev.:
First Encounter 324.5 ft
Upon Completion 323.0 ft
After ____ Hrs. ____ ft

Description	Elev.	DEPTH (ft)	BLOWS	UCS Qu (tsf)	MOIST (%)
Cored Pavement, 7" HMA over 7" CONCRETE	341.80				
M. Stiff Grey, Moist SILTY CLAY			1		
			1	0.8	31
			2	B	
	339.50				
Soft Grey, V. Moist CLAY with GRAVEL and ORGANICS			WOH		
			1	0.3	34
		-5	2	B	
	337.00				
M. Stiff Grey, V. Moist CLAY			WOH		
			WOH	0.9	35
			1	B	
	334.50				
V. Stiff Grey and Brown, Moist CLAY			WOH		
			3	2.7	30
		-10	4	B	
			1		
			2	2.5	27
			4	B	
	329.50				
Stiff Grey and Brown, Moist CLAY			1		
			2	1.6	28
		15	4	B	
	327.00				
M. Stiff Grey and Brown, Moist CLAY			1		
			2	0.9	28
			4	B	
	324.50				
Stiff Brown, Moist SILTY CLAY (Notc 1)			1		
			1	1.3	26
		-20	3	B	
Stiff Brown, Moist SILTY CLAY (Note 1) *(continued)*	322.00				
Stiff Brown, Moist SILTY CLAY with Fine PEBBLES (Note 1)			1		
			3	1.2	22
			5	B	
	319.50				
Stiff Grey, Moist SILTY CLAY (Note 1)			WOH		
			1	1.2	27
		-25	3	B	
			WOH		
			WOH	1.3	31
			2	B	
	314.50				
Stiff Grey, Moist CLAY (Note 1)			1		
			3	1.8	24
		-30	5	B	
			1		
			3	1.8	27
			6	B	
	309.50				
M. Stiff Grey, Moist CLAY with pockets of Stiff Grey, SILT (Note 1)			1		
			2	0.7	30
		-35	2	B	
	307.00				
M. Stiff Grey, Moist CLAY (Note 1)			1		
			1	0.7	40
			3	B	
	304.50				
M. Stiff Grey, Moist SILTY CLAY (Notc 1)			1		
			2	1.4	27
		-40	3	B	

The Unconfined Compressive Strength (UCS) Failure Mode is indicated by (B-Bulge, S-Shear, P-Penetrometer, E-Estimated)
Abbreviations W.O.H - Sampler Advanced By Weight of Hammer, W.O.P - Advanced by Weight of Pipe, B.S. - Before Seating
The SPT (N value) is the sum of the last two blow values in each sampling zone (AASHTO T206) BBS, from 137 (Rev. 8-99)

File Name S:\MATERIALS GEOTECHNICAL UNIT\BORING LOGS USING GINT\STATE STRUCTURES\PULASKI\077-0023.GPJ Data Template D6TEMPLT.GDT Date Printed 8/12/19
Latitude 37.2891194 Longitude -88.9956063 Datum NAD83 Job Number

Illinois Department of Transportation
Division of Highways
District 9

SOIL BORING LOG

Date 5/7/19

ROUTE IL 169 DESCRIPTION Structure over stream LOGGED BY L. Estel

SECTION LOCATION 0.4 mi West of Karnak (West Abut.), SEC. 16, TWP. 14S, RNG. 2E, PM

COUNTY Pulaski DRILLING METHOD Hollow stem auger (8" O.D., 3.25" I.D.) HAMMER TYPE Auto SPT 140 lb

STRUCT. NO. 077-0023
Station 78+93

BORING NO. 2-S
Station 78+35
Offset 6.0ft LT
Ground Surface Elev. 343.0 ft

Surface Water Elev. 330.4 ft
Stream Bed Elev. 329.0 ft

Groundwater Elev.:
First Encounter 324.5 ft
Upon Completion 323.0 ft
After ____ Hrs. ____ ft

Description	Elev.	DEPTH (ft)	BLOWS	UCS Qu (tsf)	MOIST (%)
M. Stiff Grey, Moist SILTY CLAY (Note 1) *(continued)*					
	299.00				
V. Stiff Grey, Moist CLAY (Note 1)			1		
			3	2.9	23
		-45	7	B	
	294.00				
Soft Grey, Moist to V. Moist SILTY CLAY (Note 1)			1		
			3	0.5	25
		-50	2	B	
	289.00				
M. Stiff Grey, Moist to V. Moist SILTY CLAY (Note 1)			WOH		
			WOH	0.7	22
		55	WOH	B	
	284.00				
Stiff Grey, V. Moist CLAY (Note 1)			1		
			2	1.4	37
		-60			
Moist					
			WOH		
		-65	1	1.5	24
			4	B	
	274.00				
Stiff Grey, Moist CLAY with Fine GRAVEL			1		
			5	1.1	19
		-70	7	S	
	269.00				
M. Stiff Brown, Moist CLAY LOAM with Fine GRAVEL			3		
			12	0.7	16
		-75	12	S	
	264.00				
			3		
		-80	5	1.0	20

The Unconfined Compressive Strength (UCS) Failure Mode is indicated by (B-Bulge, S-Shear, P-Penetrometer, E-Estimated)
Abbreviations W.O.H - Sampler Advanced By Weight of Hammer, W.O.P - Advanced by Weight of Pipe, B.S. - Before Seating
The SPT (N value) is the sum of the last two blow values in each sampling zone (AASHTO T206) BBS, from 137 (Rev. 8-99)

File Name S:\MATERIALS GEOTECHNICAL UNIT\BORING LOGS USING GINT\STATE STRUCTURES\PULASKI\077-3023.GPJ Data Template D6TEMPLT.GDT Date Printed 8/12/19
Latitude 37.2891194 Longitude -88.9956063 Datum NAD83 Job Number

FILE NAME: L:\IDOT\22006610-20\WO_11\78793\CADD Data\Bridge\CADD Sheets\0770042-78793-021-Soil Boring Log - III.dgn

CMT
License No. 184-000613 © Copyright CMT, Inc.

USER NAME = vtan	DESIGNED - VT	REVISED -
	DRAWN - VT	REVISED -
	CHECKED - DAC	REVISED -
PLOT DATE = 2/12/2025	DATE - 04/18/2025	REVISED -

STATE OF ILLINOIS
DEPARTMENT OF TRANSPORTATION

SOIL BORING AND ROCK CORE LOG - III
STRUCTURE NO. 077-0042

SCALE: SHEET 21 OF 23 SHEETS STA. TO STA.

F.A.S. RTE.	SECTION	COUNTY	TOTAL SHEETS	SHEET NO.
2937	116B-1	PULASKI	76	50
		CONTRACT NO. 78793		
		ILLINOIS FED. AID PROJECT		

Illinois Department of Transportation
Division of Highways
District 9

SOIL BORING LOG

Date 5/7/19

ROUTE IL 169 DESCRIPTION Structure over stream LOGGED BY L. Estel

SECTION LOCATION 0.4 mi West of Karnak (West Abut.), SEC. 16, TWP. 14S, RNG. 2E, PM

COUNTY Pulaski DRILLING METHOD Hollow stem auger (8" O.D., 3.25" I.D.) HAMMER TYPE Auto SPT 140 lb

STRUCT. NO. 077-0023
Station 78+93

BORING NO. 2-S
Station 78+35
Offset 6.0ft LT
Ground Surface Elev. 343.0 ft

Surface Water Elev. 330.4 ft
Stream Bed Elev. 329.0 ft

Groundwater Elev.:
First Encounter 324.5 ft
Upon Completion 323.0 ft
After ____ Hrs. ____ ft

Description	Elev.	DEPTH (ft)	BLOWS	UCS Qu (tsf)	MOIST (%)
M. Stiff Reddish Brown, Moist to V. Moist CLAY LOAM Binder with Fine Angular GRAVEL and Broken SANDSTONE *(continued)*			7	P	
		-85			
	254.00				
Stiff Reddish Brown, Moist to V. Moist CLAY LOAM binder with Fine Angular GRAVEL and Broken SANDSTONE			2		
		-90	7 4	1.5 P	
		-05			
	244.00				
			2		
		-100	2	0.7	

Description	Elev.	DEPTH (ft)	BLOWS	UCS Qu (tsf)	MOIST (%)
M. Stiff Reddish Brown, Moist to V. Moist CLAY LOAM Binder with Fine Angular GRAVEL and Broken SANDSTONE *(continued)*			WOH	E	
		-105			
	234.00				
Soft Reddish Brown, Moist to V. Moist CLAY LOAM Binder with Fine Angular GRAVEL			1		
		-110	2 3	0.3 E	37
		-115			
	224.00				
			WOH		
		-120	WOH	0.0	39

The Unconfined Compressive Strength (UCS) Failure Mode is indicated by (B-Bulge, S-Shear, P-Penetrometer, E-Estimated)
Abbreviations W.O.H - Sampler Advanced By Weight of Hammer, W.O.P - Advanced by Weight of Pipe, B.S. - Before Seating
The SPT (N value) is the sum of the last two blow values in each sampling zone (AASHTO T206) BBS, from 137 (Rev. 8-99)

File Name S:\MATERIALS GEOTECHNICAL UNIT\BORING LOGS USING GINT\STATE STRUCTURES\PULASKI\077-0023.GPJ Data Template D6TEMPLT.GDT Date Printed 8/12/19
Latitude 37.2891194 Longitude -88.9956083 Datum NAD83 Job Number

Illinois Department of Transportation
Division of Highways
District 9

SOIL BORING LOG

Date 5/7/19

ROUTE IL 169 DESCRIPTION Structure over stream LOGGED BY L. Estel

SECTION LOCATION 0.4 mi West of Karnak (West Abut.), SEC. 16, TWP. 14S, RNG. 2E, PM

COUNTY Pulaski DRILLING METHOD Hollow stem auger (8" O.D., 3.25" I.D.) HAMMER TYPE Auto SPT 140 lb

STRUCT. NO. 077-0023
Station 78+93

BORING NO. 2-S
Station 78+35
Offset 6.0ft LT
Ground Surface Elev. 343.0 ft

Surface Water Elev. 330.4 ft
Stream Bed Elev. 329.0 ft

Groundwater Elev.:
First Encounter 324.5 ft
Upon Completion 323.0 ft
After ____ Hrs. ____ ft

Description	Elev.	DEPTH (ft)	BLOWS	UCS Qu (tsf)	MOIST (%)
V. Loose Coarse Sand and Fine Angular GRAVEL with V. Soft Brown, Wet CLAY Slurry 15% Fine SAND, 9% SILT, 15% CLAY, 61% Coarse SAND and Fine GRAVEL (Lab 29) *(continued)*			WOH	E	
		-125			
	214.00				
Loose Coarse Sand and Fine Angular GRAVEL with V. Soft Brown, Wet CLAY Slurry 31% Fine SAND, 21% SILT, 26% CLAY, 22% Coarse SAND and Fine GRAVEL (Lab 30)			WOH		
		-130	3 5	0.0 E	42
	212.20				
Light Grey LIMESTONE, Dry, V. Fine Grained, Thickly Bedded, Hard Field Hardness	212.10		100/1"		
(Borehole continued with rock coring.)					
Note 1: Not Liquefiable, PI >= 12 based on visual ID and historical data		-135			
Bottom of hole @ 135.9 ft					
Elevation referenced to PSM 75, IDOT Mon. @ Sta 75+00, 72 ft RT; EL. 341.54					
To convert "N" values to "N60", multiply by 1.5		-140			

The Unconfined Compressive Strength (UCS) Failure Mode is indicated by (B-Bulge, S-Shear, P-Penetrometer, E-Estimated)
Abbreviations W.O.H - Sampler Advanced By Weight of Hammer, W.O.P - Advanced by Weight of Pipe, B.S. - Before Seating
The SPT (N value) is the sum of the last two blow values in each sampling zone (AASHTO T206) BBS, from 137 (Rev. 8-99)

File Name S:\MATERIALS GEOTECHNICAL UNIT\BORING LOGS USING GINT\STATE STRUCTURES\PULASKI\077-0023.GPJ Data Template D6TEMPLT.GDT Date Printed 8/12/19
Latitude 37.2891194 Longitude -88.9956083 Datum NAD83 Job Number

FILE NAME: L:\IDOT\22006610-20\WO_11178793\CADD Data\Bridge\CADD Sheets\0770042-78793-022-Soil Boring Log - IV.dgn

CMT
License No. 184-000813 © Copyright CMT, Inc.

USER NAME = dcochran	DESIGNED - VT	REVISED -	
	DRAWN - VT	REVISED -	
	CHECKED - DAC	REVISED -	
PLOT DATE = 4/16/2025	DATE - 04/18/2025	REVISED -	

STATE OF ILLINOIS
DEPARTMENT OF TRANSPORTATION

SOIL BORING AND ROCK CORE LOG - IV
STRUCTURE NO. 077-0042

SCALE: SHEET 22 OF 23 SHEETS STA. TO STA.

F.A.S. RTE.	SECTION	COUNTY	TOTAL SHEETS	SHEET NO.
2937	116B-1	PULASKI	76	51
		CONTRACT NO. 78793		
		ILLINOIS FED. AID PROJECT		

Illinois Department of Transportation
Division of Highways
District 9

ROCK CORE LOG

Date 5/7/19

ROUTE IL 169 **DESCRIPTION** Structure over stream **LOGGED BY** L. Estel

SECTION **LOCATION** 0.4 mi West of Karnak (West Abut.), **SEC.** 16, **TWP.** 14S, **RNG.** 2E, **PM**

COUNTY Pulaski **CORING METHOD** Conventional rotary with water

STRUCT. NO. 077-0023
Station 78+93

CORING BARREL TYPE & SIZE NV3 5FT NWJ

Core Diameter 2 in
Top of Rock Elev. 212.20 ft
Begin Core Elev. 212.10 ft

BORING NO. 2-S
Station 78+35
Offset 6.0ft LT
Ground Surface Elev. 343.0 ft

	DEPTH (ft)	CORE (#)	RECOVERY (%)	R.Q.D. (%)	CORE TIME (min/ft)	STRENGTH (tsf)
Light Grey LIMESTONE, Dry, V. Fine Grained, Thickly Bedded, Hard Field Hardness 212.10		1	100	85	7.6	
						446
						426.6
						923
						952.6
	-135					849.4
(End of boring. Core run had to be abandoned due to augers having several kinks in the vertical alignment.) 207.10						851.9
	-140					
	-145					
	-150					

Color pictures of the cores Yes, attached
Cores will be stored for examination until Const. complete
The "Strength" column represents the uniaxial compressive strength of the core sample (ASTM D-2938)
RQD is the ratio of the total length of sound core specimens >4" to total length of core run

BBS, form 138 (Rev. 8-99)

ROCK CORE 077-0023.GPJ D6TEMPLT.GDT 8/12/19

FILE NAME: L:\IDOT\2200610-00\WO_11\78793\CADD Data\Bridge\CADD Sheets\0770042-78793-023-Soil Boring Log - V.dgn

CMT
License No. 184-000613 © Copyright CMT, Inc.

USER NAME = dcochran	DESIGNED - VT	REVISED -	
	DRAWN - VT	REVISED -	
	CHECKED - DAC	REVISED -	
PLOT DATE = 4/16/2025	DATE - 04/18/2025	REVISED -	

STATE OF ILLINOIS
DEPARTMENT OF TRANSPORTATION

SOIL BORING AND ROCK CORE LOG - V
STRUCTURE NO. 077-0042

SCALE: SHEET 23 OF 23 SHEETS STA. TO STA.

F.A.S. RTE.	SECTION	COUNTY	TOTAL SHEETS	SHEET NO.
2937	116B-1	PULASKI	76	52

CONTRACT NO. 78793

ILLINOIS FED. AID PROJECT

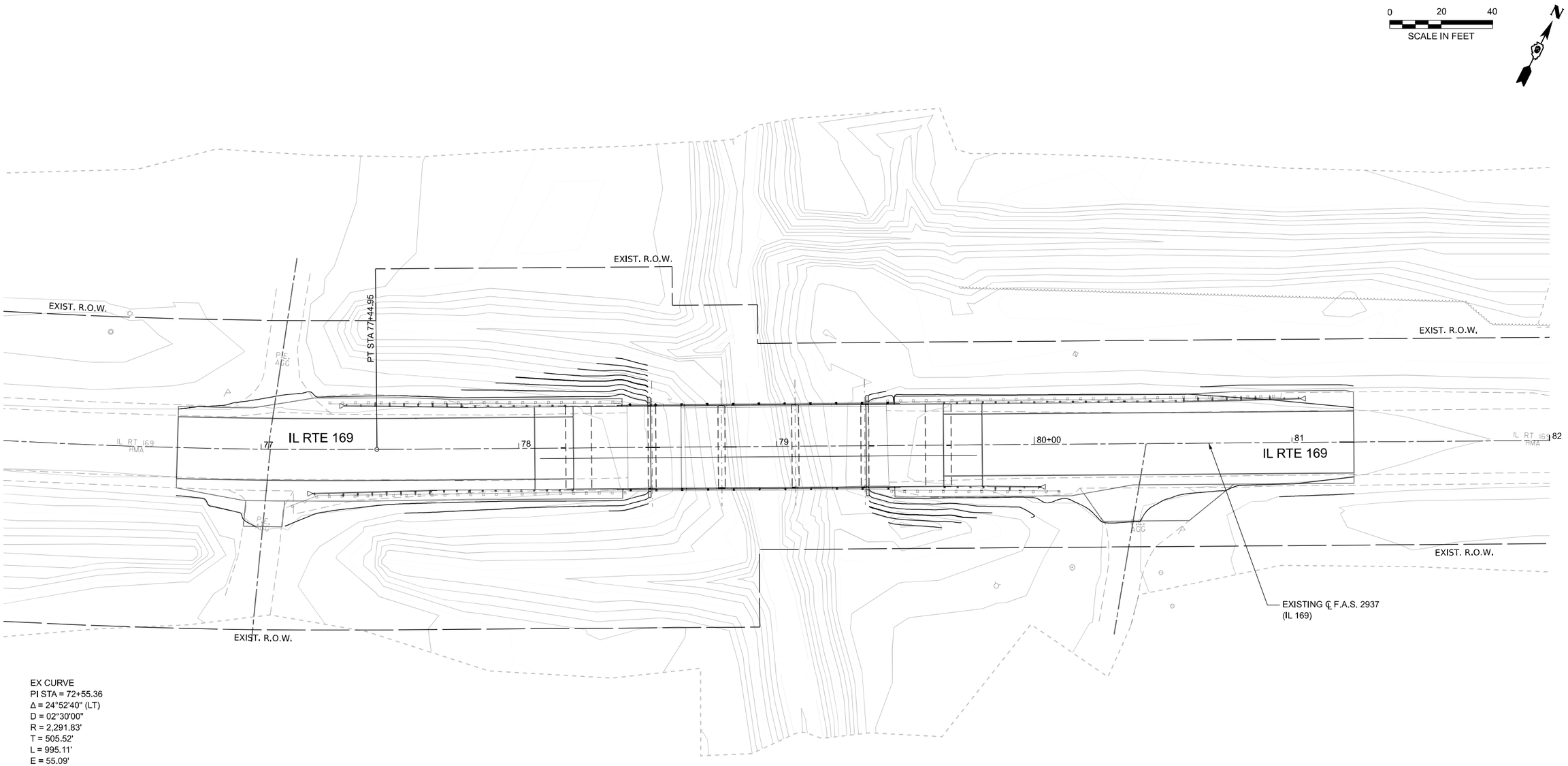

EX CURVE
PI STA = 72+55.36
Δ = 24°52'40" (LT)
D = 02°30'00"
R = 2,291.83'
T = 505.52'
L = 995.11'
E = 55.09'
e = ____
PC STA = 67+49.84
PT STA = 77+44.95

LEGEND

— 350' — EXISTING GROUND CONTOUR

— 350' — PROPOSED GROUND CONTOUR

MODEL: SH-IL169 - Grading Plan01
FILE NAME: ...\Sheet\D978793-sht-grading.dgn

CMT
License No. 184-000613

USER NAME = Matt Overbey	DESIGNED - AJ	REVISED -	
	DRAWN - RAH	REVISED -	
	CHECKED - MJO	REVISED -	
PLOT DATE = 6/26/2025	DATE - 6/26/2025	REVISED -	

STATE OF ILLINOIS
DEPARTMENT OF TRANSPORTATION

F.A.S. 2937 (ILLINOIS ROUTE 169)
GRADING DETAIL

SCALE: 1"=20' | SHEET 1 OF 1 SHEETS | STA. 76+00.00 R2 TO STA. 82+00.00 R2

F.A.S. RTE.	SECTION	COUNTY	TOTAL SHEETS	SHEET NO.
2937	116B-1	PULASKI	76	53
		CONTRACT NO. 78793		
		ILLINOIS	FED. AID PROJECT	

BUTT JOINT WITH MILLING

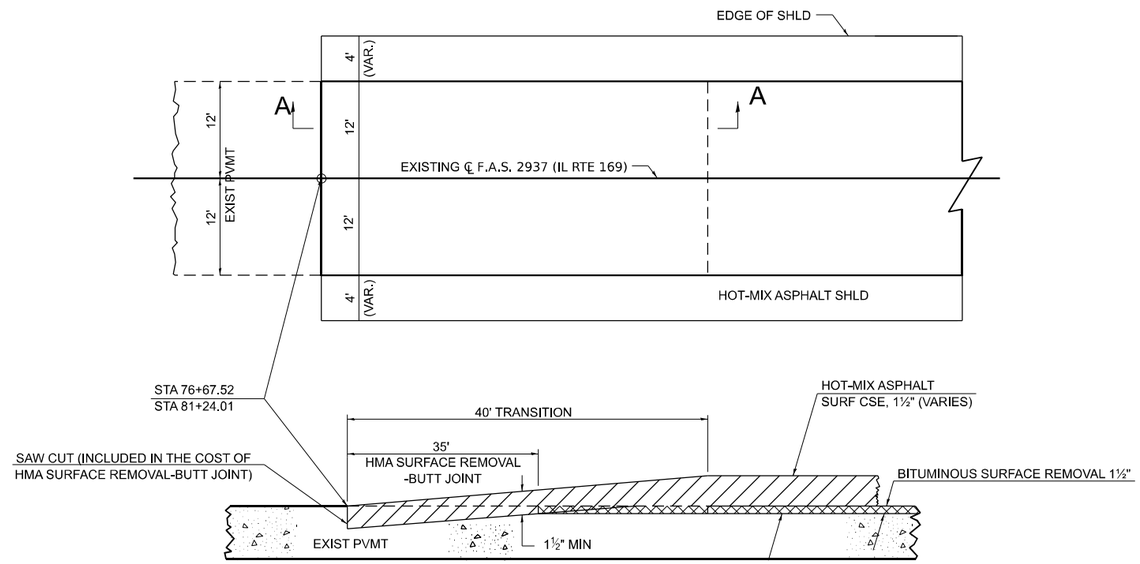

SECTION A–A

DRAWN	03-09-17
REVISED	02-18-20
REVISED	10-21-21
REVISED	05-26-22

STD. 9-14

TYPICAL CROSS SECTION SHOWING STEP CONSTRUCTION ON EXISTING FILL

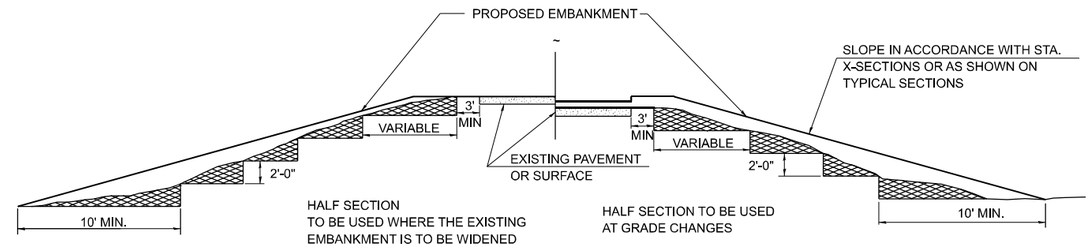

STEPS SHALL BE CUT IN THE EXISTING SLOPE IN ACCORDANCE WITH ART. 205.03 EXCEPT THAT THE REQUIREMENT THAT STEPS SHALL BE CUT INTO THE EXISTING SLOPE BEFORE THE CONTRUCTION OF THE EXISTING EMBANKMENT IS STARTED SHALL NOT APPLY. MATERIAL TO BE REMOVED AND REPLACED IN THE EMBANKMENT IN ACCORDANCE WITH ART. 205.04. COST TO BE INCLUDED IN THE VARIOUS ITEMS OF EXCAVATION AND NO ADDITIONAL COMPENSATION WILL BE ALLOWED BECAUSE OF THIS WORK.

DRAWN	02-15-89
REVISED	05-07-08
REVISED	10-21-21
REVISED	05-27-22

STD. 9-25

SEEDING & MULCHING

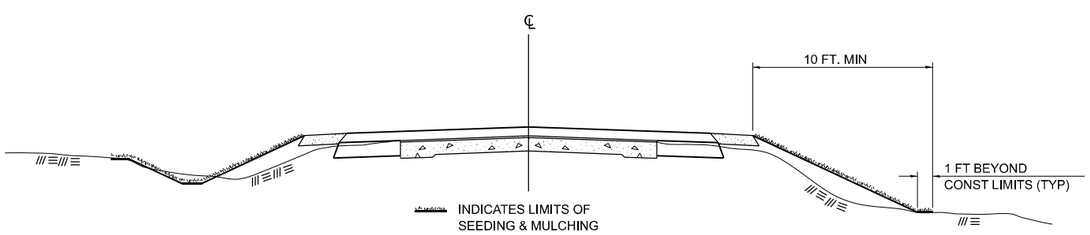

GENERAL NOTES

IN GENERAL, ALL EARTH SURFACES DISTURBED DURING CONSTRUCTION OPERATIONS SHALL BE SEEDED AND MULCHED UPON COMPLETION OF ALL GRADING OPERATIONS.

ON DETOUR ROADS, SLOPES SHALL BE SEEDED IMMEDIATELY UPON COMPLETION OF ANY GIVEN STAGE GRADING. TEMPORARY SEEDING SHALL BE CLASS 7.

FERTILIZER NUTRIENTS SHALL BE APPLIED TO ALL SEEDED AREAS. LIMESTONE SHALL BE APPLIED TO ALL AREAS OF FINAL SEEDING.

THE RATES OF APPLICATION OF FERTILIZER, MULCH AND LIMESTONE SHALL BE AS SPECIFIED IN THE SPECIAL PROVISIONS FOR ROAD AND BRIDGE CONSTRUCTION.

SECTIONS 250 AND 251 SHALL GOVERN THIS WORK EXCEPT AS SPECIFIED HEREIN OR AS NOTED IN THE SPECIAL PROVISIONS.

DRAWN	02-15-89
REVISED	03-27-08
REVISED	10-21-21
REVISED	05-27-22

STD. 9-19

MODEL: D9-Details-1 [Sheet]
FILE NAME: ...\D9786793-sht-detail_D9standards.dgn

CMT
License No. 184-000613

USER NAME = Matt Overbey	DESIGNED - AJ	REVISED -	
	DRAWN - RAH	REVISED -	
	CHECKED - MJO	REVISED -	
PLOT DATE = 6/26/2025	DATE - 6/26/2025	REVISED -	

STATE OF ILLINOIS
DEPARTMENT OF TRANSPORTATION

F.A.S. 2937 (ILLINOIS ROUTE 169)
DETAILS - D9 STANDARDS

SCALE: SHEET 1 OF 2 SHEETS STA. TO STA.

F.A.S. RTE.	SECTION	COUNTY	TOTAL SHEETS	SHEET NO.
2937	116B-1	PULASKI	76	54

CONTRACT NO. 78793

ILLINOIS | FED. AID PROJECT

ENTRANCE SIGN FOR USE WITH TEMPORARY SIGNALS

(2)

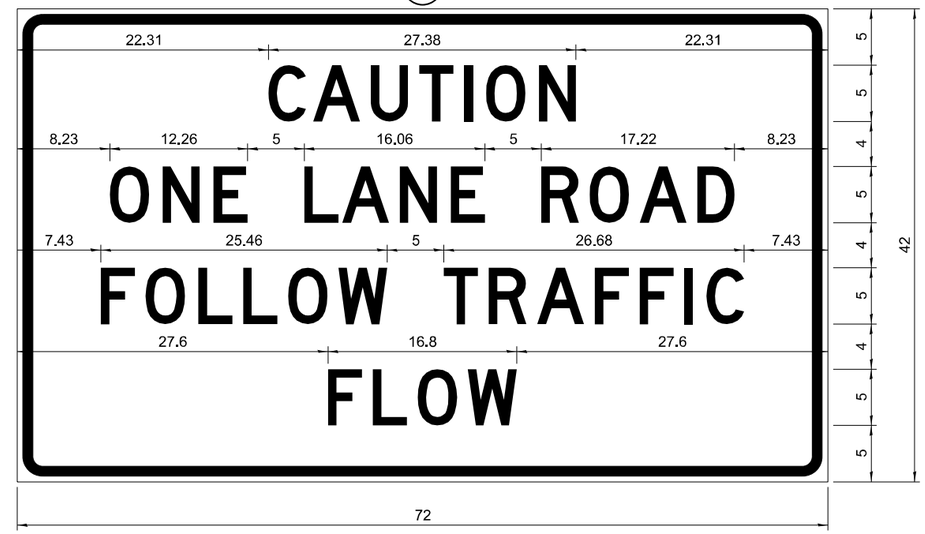

COLOR	LEGEND AND BORDER	BLACK	NON-REFLECTORIZED
	BACKGROUND	ORANGE	REFLECTORIZED

2.25" Radius, 0.88" Border, 0.50" IndenT;
[CAUTION] D; [ONE LANE ROAD] D;
[FOLLOW TRAFFIC] D; [FLOW] D

(2) This sign shall be installed at entrances located between the temporary signals as shown in the staging plans.

Table Of Widths And Spaces

22.31	C 3.36	0.62	A 4.18	0.94	U 3.36	0.94	T 3.04	0.94	I 0.78	1.17	O 3.52	1.17	N 3.36	22.31

8.23	O 3.51	1.17	N 3.36	1.18	E 3.04

5.00	L 3.05	0.31	A 4.18	0.94	N 3.36	1.17	E 3.05

5.00	R 3.36	0.93	O 3.52	0.94	A 4.18	0.93	D 3.36	8.23

7.43	F 3.04	0.94	O 3.52	1.17	L 3.04	0.94	L 3.05	0.94	O 3.51	0.94	W 4.37

5.00	T 3.05	0.94	R 3.36	0.94	A 4.18	0.93	F 3.05	0.94	F 3.04	0.94	I 0.78	1.18	C 3.35	7.43

27.60	F 3.05	0.94	L 3.04	0.94	O 3.52	0.93	W 4.38	27.60

Sign not to scale

GENERAL NOTES

All work to furnish and install these signs shall be included in the cost of the specified traffic control standards and shall not be paid separately.

All Illinois Standard signs shall conform to the latest edition of the "Illinois Standard Highway Signs Book" in effect on the date of invitation for bids.

Signs shall meet the applicable portions of Sections 701 and 720 of the Standard Specifications.

All dimensions are in inches unless otherwise noted.

DRAWN	3-2-16 D2
REVISED	03-12-24
REVISED	
REVISED	

STD. 9-34

MODEL: D9-Details-2 [Sheet]
FILE NAME: ...\D9787793-sht-detail_D9standards.dgn

CMT
License No. 184-000613

USER NAME = Matt Overbey	DESIGNED - AJ	REVISED -	
	DRAWN - RAH	REVISED -	
	CHECKED - MJO	REVISED -	
PLOT DATE = 6/26/2025	DATE - 6/26/2025	REVISED -	

STATE OF ILLINOIS
DEPARTMENT OF TRANSPORTATION

F.A.S. 2937 (ILLINOIS ROUTE 169)
DETAILS - D9 STANDARDS

SCALE: | SHEET 2 OF 2 SHEETS | STA. | TO STA.

F.A.S. RTE.	SECTION	COUNTY	TOTAL SHEETS	SHEET NO.
2937	116B-1	PULASKI	76	55

CONTRACT NO. 78793

ILLINOIS | FED. AID PROJECT

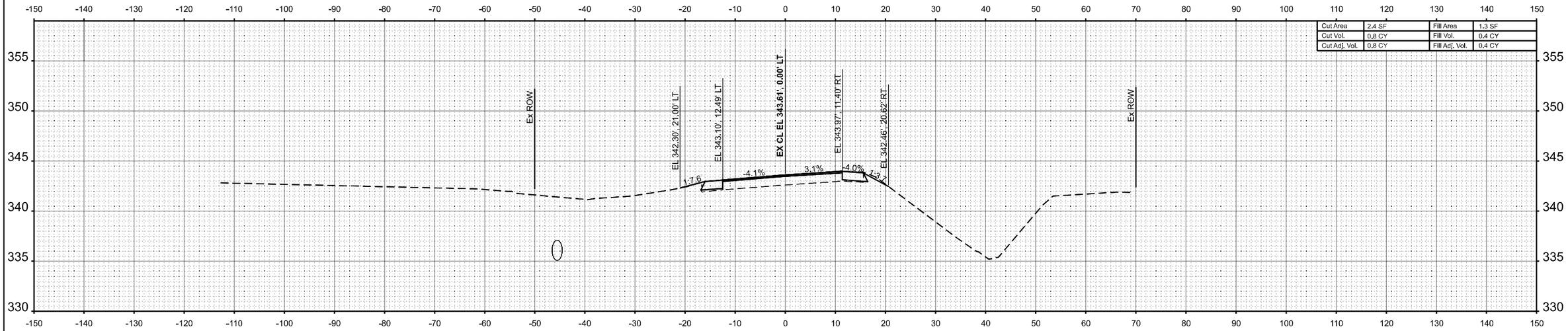

Cut Area	2.4 SF	Fill Area	1.3 SF
Cut Vol.	0.8 CY	Fill Vol.	0.4 CY
Cut Adj. Vol.	0.8 CY	Fill Adj. Vol.	0.4 CY

STA 76+67.53

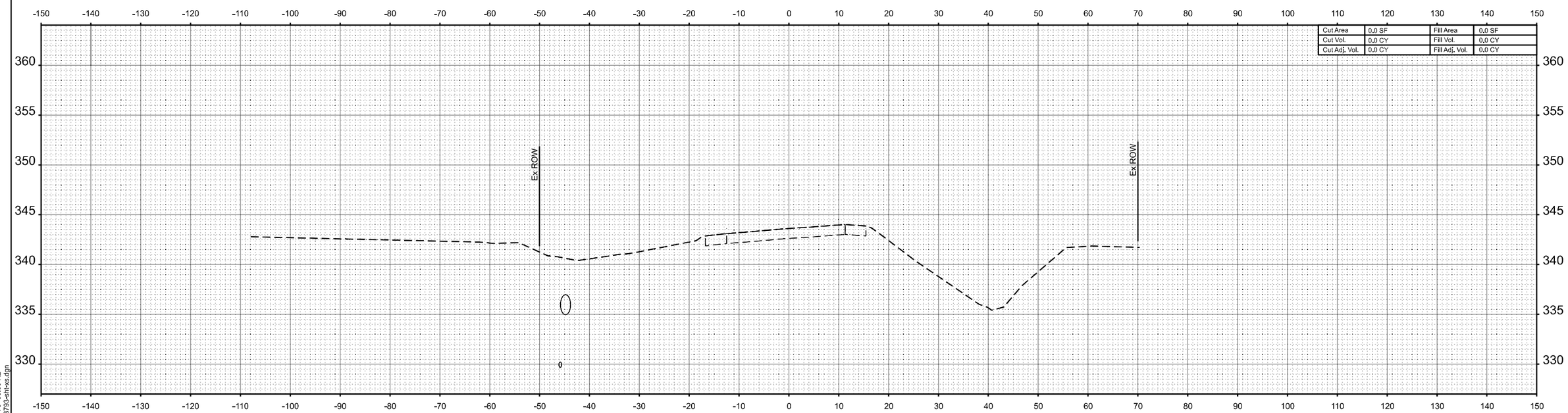

Cut Area	0.0 SF	Fill Area	0.0 SF
Cut Vol.	0.0 CY	Fill Vol.	0.0 CY
Cut Adj. Vol.	0.0 CY	Fill Adj. Vol.	0.0 CY

STA 76+50.00

MODEL: SHT - IL169 - 76+50.00 R2
FILE NAME: ...\Sheet\D978793-sht-xs.dgn

CMT
License No. 184-000613

USER NAME = Matt Overbey	DESIGNED - AJ	REVISED -
	DRAWN - RAH	REVISED -
	CHECKED - MJO	REVISED -
PLOT DATE = 6/26/2025	DATE - 6/26/2025	REVISED -

STATE OF ILLINOIS
DEPARTMENT OF TRANSPORTATION

F.A.S. 2937 (ILLINOIS ROUTE 169)
CROSS SECTIONS

SCALE: 1"=10' | SHEET 1 OF 21 SHEETS | STA. 76+50.00 R2 TO STA. 76+75.00 R2

F.A.S. RTE.	SECTION	COUNTY	TOTAL SHEETS	SHEET NO.
2937	116B-1	PULASKI	76	56

CONTRACT NO. 78793

ILLINOIS | FED. AID PROJECT

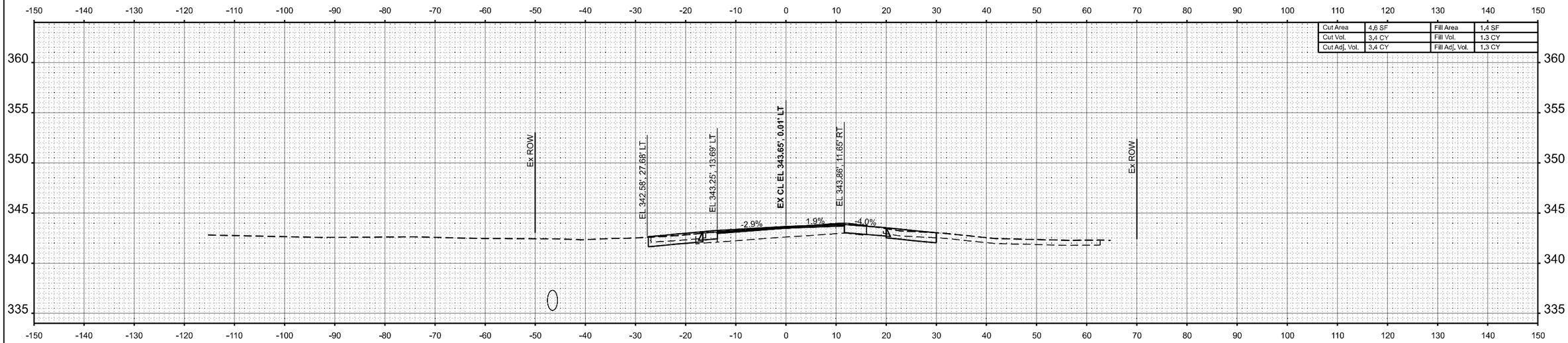

Cut Area	4.6 SF	Fill Area	1.4 SF
Cut Vol.	3.4 CY	Fill Vol.	1.3 CY
Cut Adj. Vol.	3.4 CY	Fill Adj. Vol.	1.3 CY

STA 77+00.00

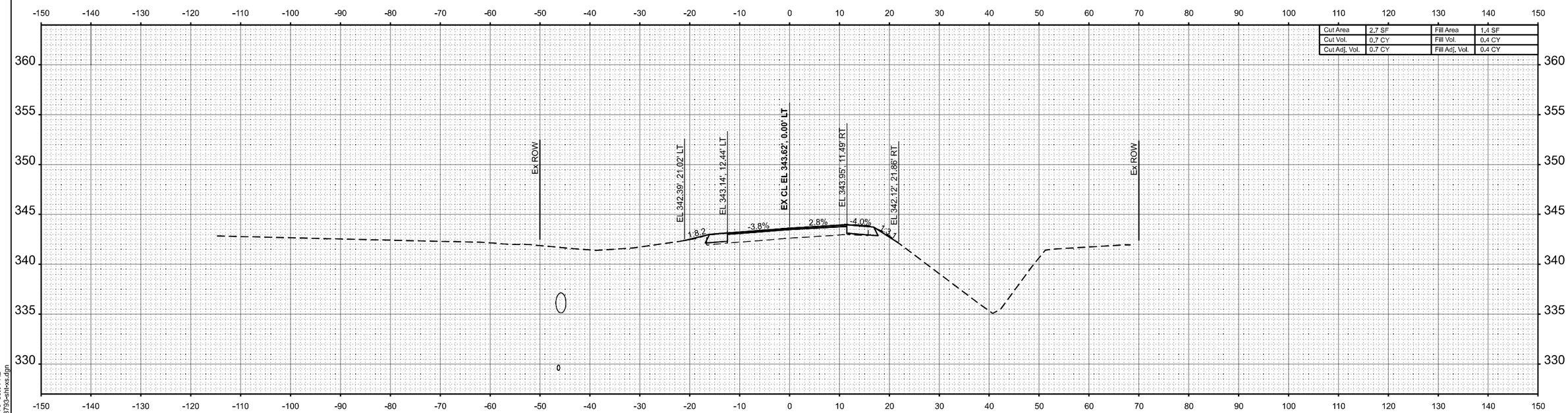

Cut Area	2.7 SF	Fill Area	1.4 SF
Cut Vol.	0.7 CY	Fill Vol.	0.4 CY
Cut Adj. Vol.	0.7 CY	Fill Adj. Vol.	0.4 CY

STA 76+75.00

MODEL: SHT - IL169 - 76+83.01 R2
FILE NAME: ...\Sheet\D978793-sht-xs.dgn

CMT
License No. 184-000613 © Copyright CMT, Inc.

USER NAME = Matt Overbey	DESIGNED - AJ	REVISED -
	DRAWN - RAH	REVISED -
	CHECKED - MJO	REVISED -
PLOT DATE = 6/26/2025	DATE - 6/26/2025	REVISED -

STATE OF ILLINOIS
DEPARTMENT OF TRANSPORTATION

F.A.S. 2937 (ILLINOIS ROUTE 169)
CROSS SECTIONS

SCALE: SHEET 2 OF 21 SHEETS STA. 76+83.01 R2 TO STA. 77+00.00 R2

F.A.S. RTE.	SECTION	COUNTY	TOTAL SHEETS	SHEET NO.
2937	116B-1	PULASKI	76	57
		CONTRACT NO. 78793		
		ILLINOIS	FED. AID PROJECT	

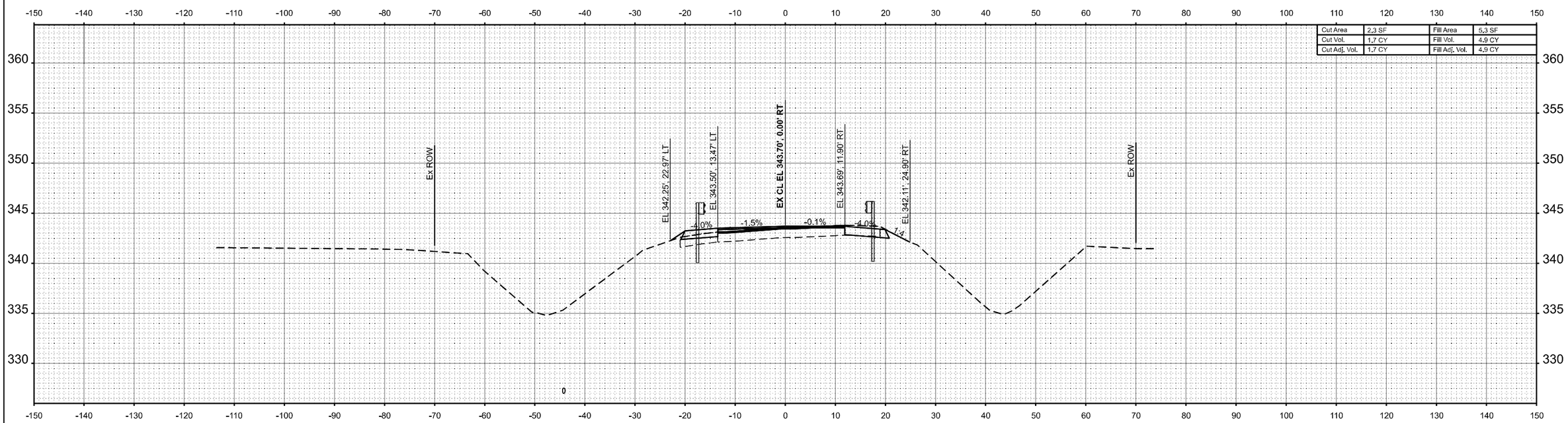

Cut Area	2.3 SF	Fill Area	5.3 SF
Cut Vol.	1.7 CY	Fill Vol.	4.9 CY
Cut Adj. Vol.	1.7 CY	Fill Adj. Vol.	4.9 CY

STA 77+50.00

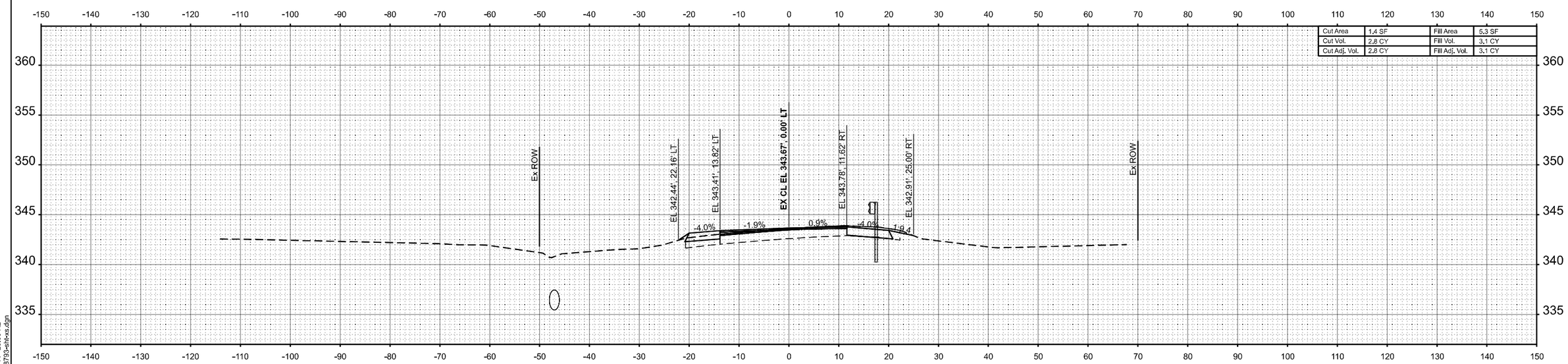

Cut Area	1.4 SF	Fill Area	5.3 SF
Cut Vol.	2.8 CY	Fill Vol.	3.1 CY
Cut Adj. Vol.	2.8 CY	Fill Adj. Vol.	3.1 CY

STA 77+25.00

MODEL: SHT - IL169 - 77+25.00 R2
FILE NAME: ...\Sheet\D978793-sht-xs.dgn

CMT
License No. 184-000613 © Copyright CMT, Inc.

USER NAME = Matt Overbey	DESIGNED - AJ	REVISED -	
	DRAWN - RAH	REVISED -	
	CHECKED - MJO	REVISED -	
PLOT DATE = 6/26/2025	DATE - 6/26/2025	REVISED -	

STATE OF ILLINOIS
DEPARTMENT OF TRANSPORTATION

F.A.S. 2937 (ILLINOIS ROUTE 169)
CROSS SECTIONS

SCALE: 1"=10' | SHEET 3 OF 21 SHEETS | STA. 77+25.00 R2 TO STA. 77+50.00 R2

F.A.S. RTE.	SECTION	COUNTY	TOTAL SHEETS	SHEET NO.
2937	116B-1	PULASKI	76	58

CONTRACT NO. 78793

ILLINOIS | FED. AID PROJECT

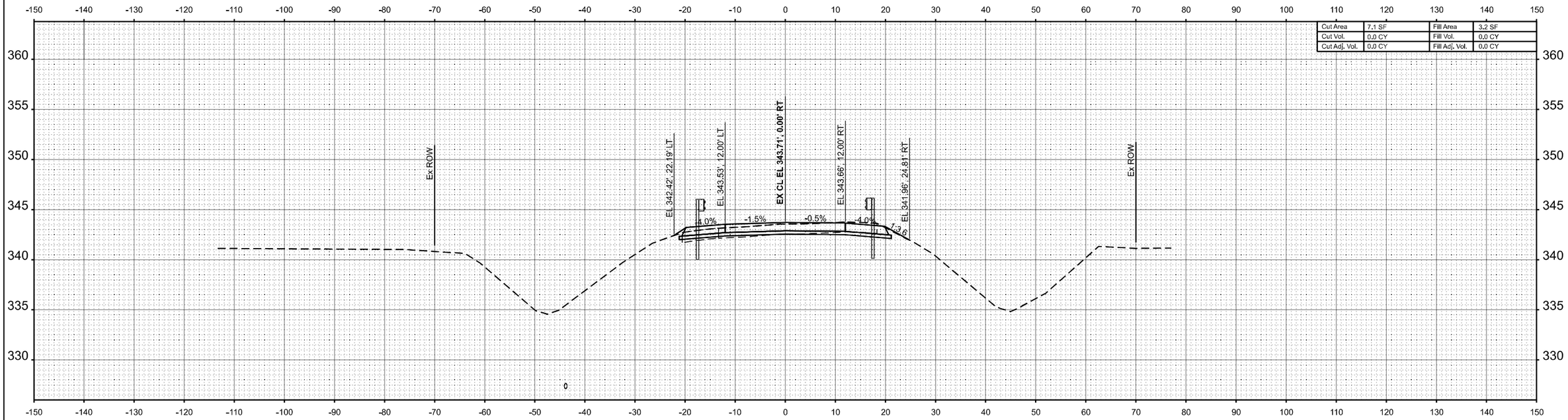

Cut Area	7.1 SF	Fill Area	3.2 SF
Cut Vol.	0.0 CY	Fill Vol.	0.0 CY
Cut Adj. Vol.	0.0 CY	Fill Adj. Vol.	0.0 CY

STA 77+60.01

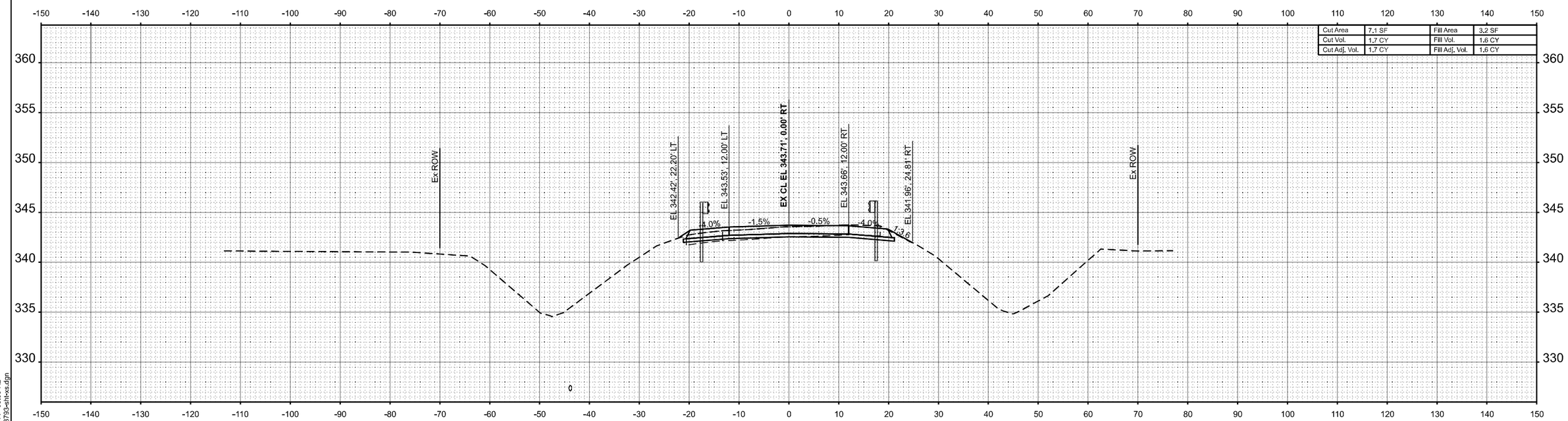

Cut Area	7.1 SF	Fill Area	3.2 SF
Cut Vol.	1.7 CY	Fill Vol.	1.6 CY
Cut Adj. Vol.	1.7 CY	Fill Adj. Vol.	1.6 CY

STA 77+59.99

MODEL: SHT - IL169 - 77+59.99 R2
FILE NAME: ...\Sheet\D978793-sht-xs.dgn

CMT
License No. 184-000613

USER NAME = Matt Overbey	DESIGNED - AJ	REVISED -
	DRAWN - RAH	REVISED -
	CHECKED - MJO	REVISED -
PLOT DATE = 6/26/2025	DATE - 6/26/2025	REVISED -

STATE OF ILLINOIS
DEPARTMENT OF TRANSPORTATION

F.A.S. 2937 (ILLINOIS ROUTE 169)
CROSS SECTIONS

SCALE: 1"=10' | SHEET OF SHEETS | STA. TO STA.

F.A.S. RTE.	SECTION	COUNTY	TOTAL SHEETS	SHEET NO.
2937	116B-1	PULASKI	76	59

CONTRACT NO. 78793

ILLINOIS | FED. AID PROJECT

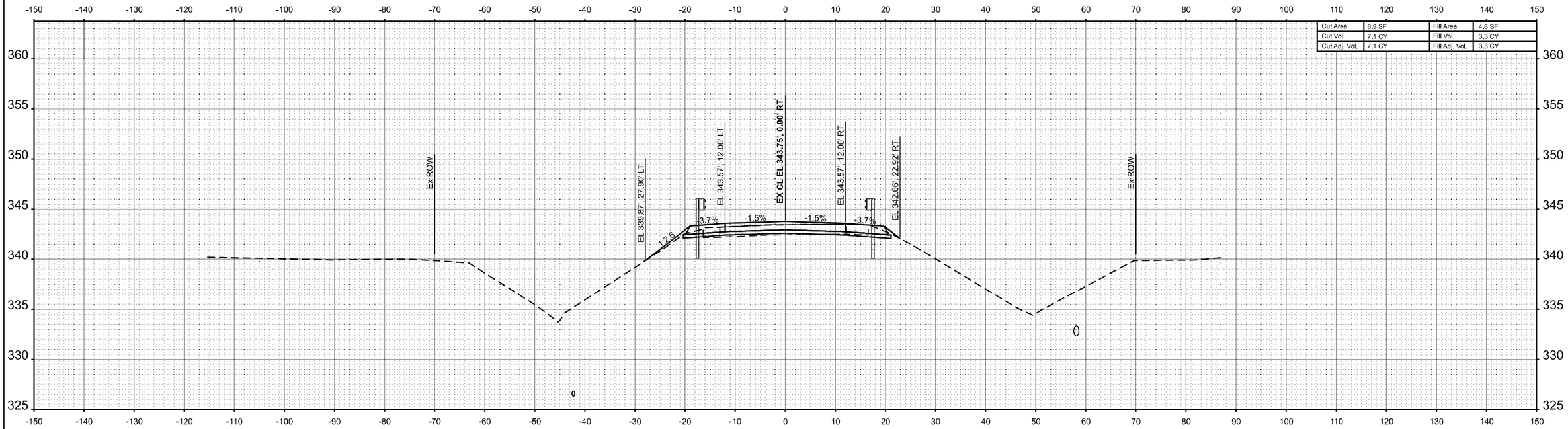

Cut Area	6.9 SF	Fill Area	4.8 SF
Cut Vol.	7.1 CY	Fill Vol.	3.3 CY
Cut Adj. Vol.	7.1 CY	Fill Adj. Vol.	3.3 CY

STA 78+00.00

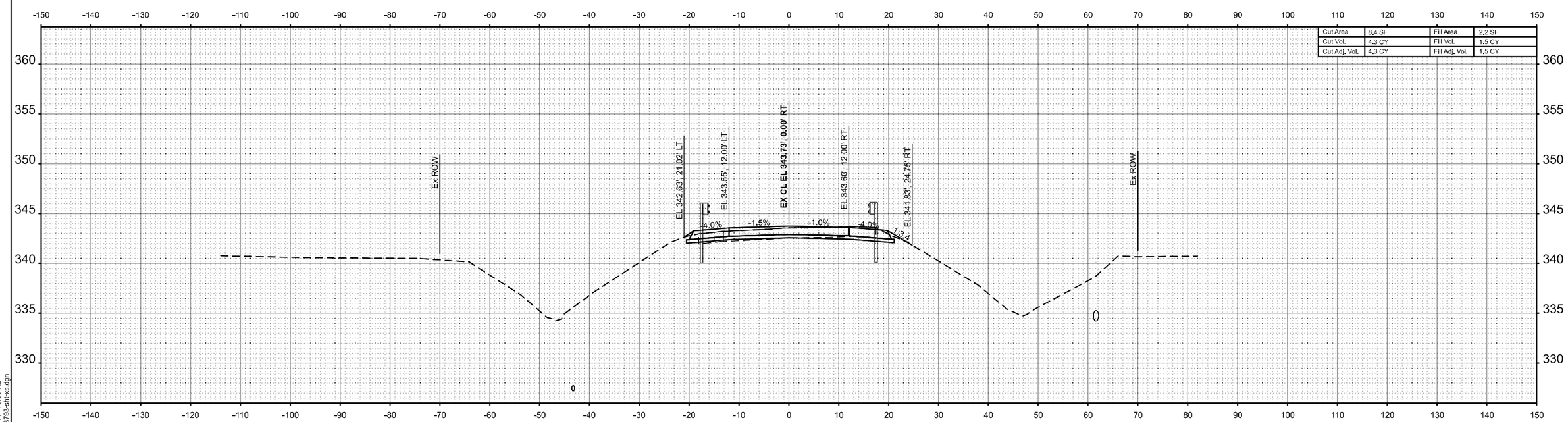

Cut Area	8.4 SF	Fill Area	2.2 SF
Cut Vol.	4.3 CY	Fill Vol.	1.5 CY
Cut Adj. Vol.	4.3 CY	Fill Adj. Vol.	1.5 CY

STA 77+75.00

MODEL: SHT - IL169 - 77+75.00 R2
FILE NAME: ...\Sheet\D978793-sht-xs.dgn

CMT
License No. 184-000613
© Copyright CMT, Inc.

USER NAME = Matt Overbey	DESIGNED - AJ	REVISED -
	DRAWN - RAH	REVISED -
	CHECKED - MJO	REVISED -
PLOT DATE = 6/26/2025	DATE - 6/26/2025	REVISED -

STATE OF ILLINOIS
DEPARTMENT OF TRANSPORTATION

F.A.S. 2937 (ILLINOIS ROUTE 169)
CROSS SECTIONS

SCALE: 1"=10' | SHEET OF SHEETS | STA. TO STA.

F.A.S. RTE.	SECTION	COUNTY	TOTAL SHEETS	SHEET NO.
2937	116B-1	PULASKI	76	60
		CONTRACT NO. 78793		
		ILLINOIS	FED. AID PROJECT	

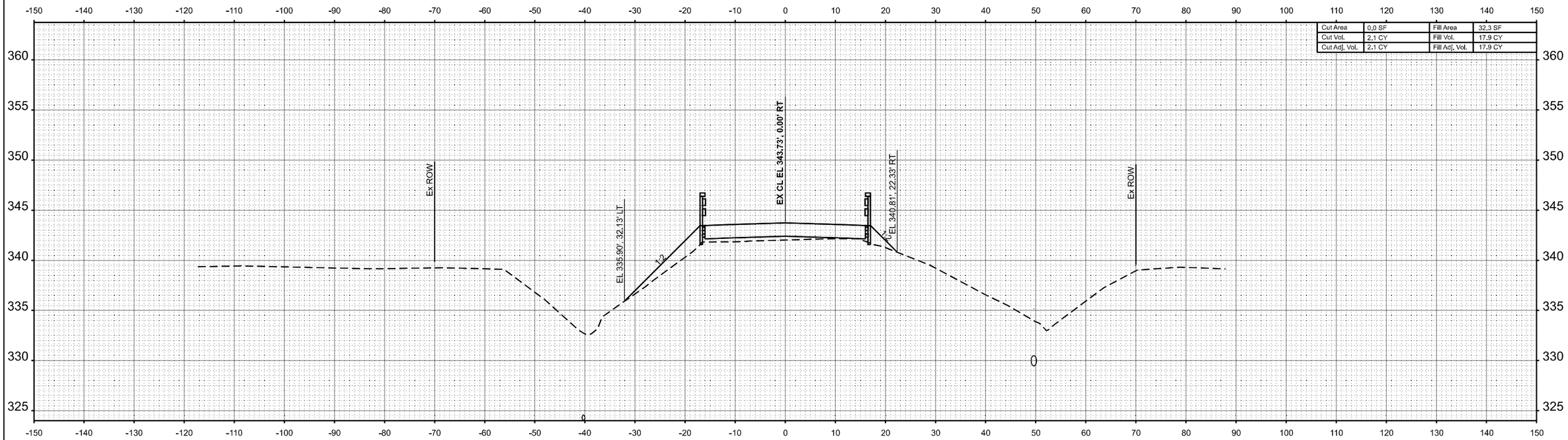

Cut Area	0.0 SF	Fill Area	32.3 SF
Cut Vol.	2.1 CY	Fill Vol.	17.9 CY
Cut Adj. Vol.	2.1 CY	Fill Adj. Vol.	17.9 CY

STA 78+50.00

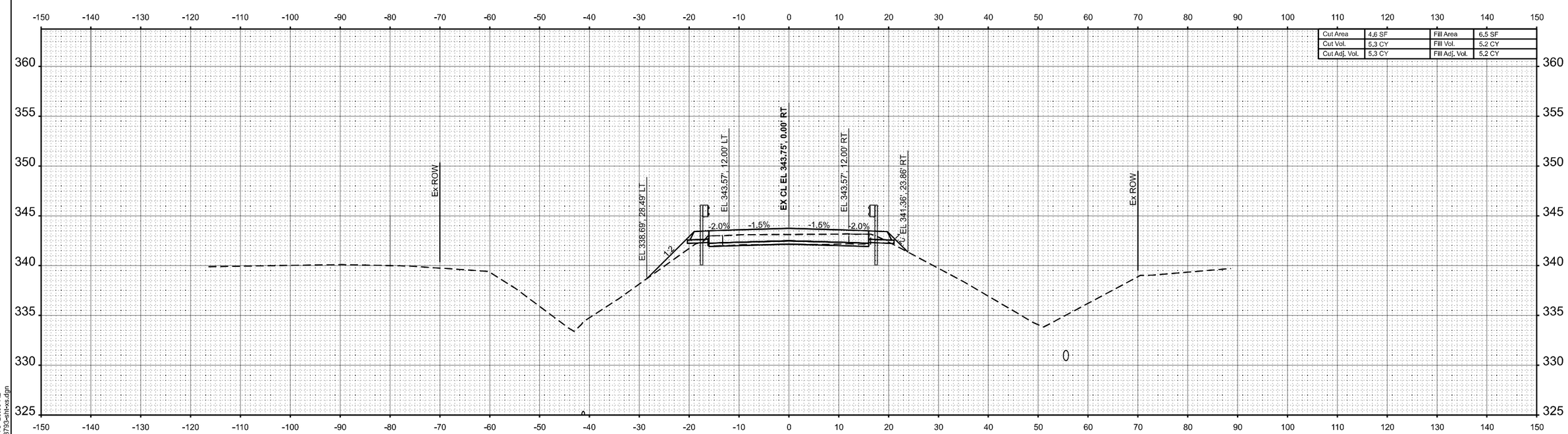

Cut Area	4.6 SF	Fill Area	6.5 SF
Cut Vol.	5.3 CY	Fill Vol.	5.2 CY
Cut Adj. Vol.	5.3 CY	Fill Adj. Vol.	5.2 CY

STA 78+25.00

MODEL: SHT - IL169 - 78+25.00 R2
FILE NAME: ...\Sheet\D978793-sht-xs.dgn

CMT
License No. 184-000613 © Copyright CMT, Inc.

USER NAME = Matt Overbey	DESIGNED - AJ	REVISED -	
	DRAWN - RAH	REVISED -	
	CHECKED - MJO	REVISED -	
PLOT DATE = 6/26/2025	DATE - 6/26/2025	REVISED -	

STATE OF ILLINOIS
DEPARTMENT OF TRANSPORTATION

F.A.S. 2937 (ILLINOIS ROUTE 169)
CROSS SECTIONS

SCALE: 1"=10' | SHEET 6 OF 21 SHEETS | STA. 78+25.00 R2 TO STA. 78+50.00 R2

F.A.S. RTE.	SECTION	COUNTY	TOTAL SHEETS	SHEET NO.
2937	116B-1	PULASKI	76	61
		CONTRACT NO. 78793		
		ILLINOIS	FED. AID PROJECT	

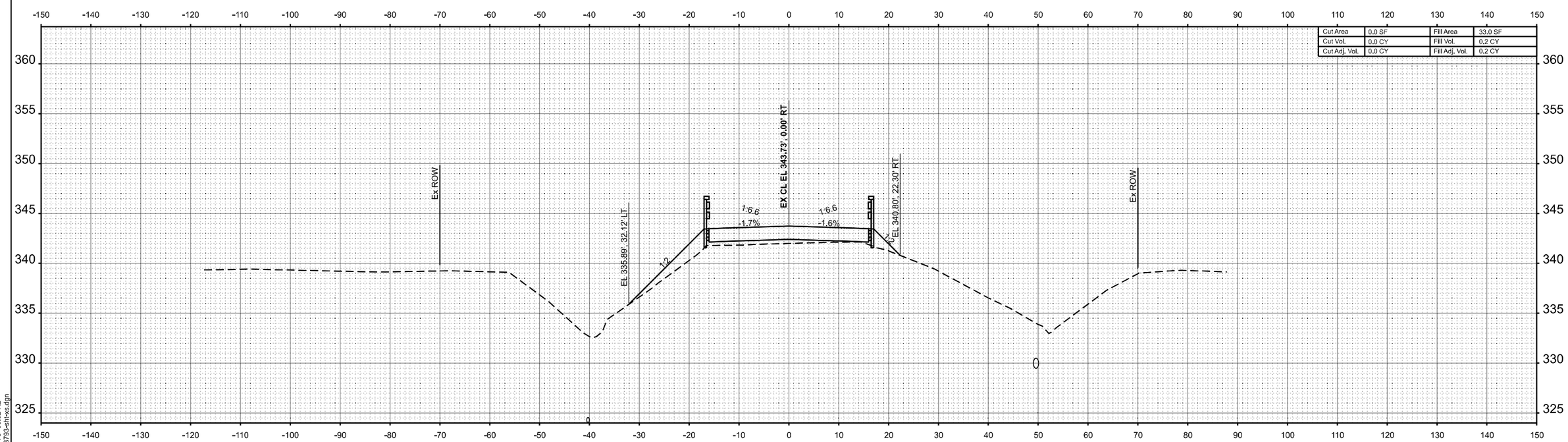

Cut Area	0.0 SF	Fill Area	33.0 SF
Cut Vol.	0.0 CY	Fill Vol.	0.2 CY
Cut Adj. Vol.	0.0 CY	Fill Adj. Vol.	0.2 CY

STA 78+50.20

MODEL: SHT - IL169 - 78+50.02 R2
FILE NAME: ...\Sheet\D978793-sht-xs.dgn

CMT
License No. 184-000613 © Copyright CMT, Inc.

USER NAME = Matt Overbey	DESIGNED - AJ	REVISED -
	DRAWN - RAH	REVISED -
	CHECKED - MJO	REVISED -
PLOT DATE = 6/26/2025	DATE - 6/26/2025	REVISED -

STATE OF ILLINOIS
DEPARTMENT OF TRANSPORTATION

F.A.S. 2937 (ILLINOIS ROUTE 169)
CROSS SECTIONS

SCALE: 1"=10' | SHEET 7 OF 21 SHEETS | STA. 78+50.02 R2 TO STA. 78+50.02 R2

F.A.S. RTE.	SECTION	COUNTY	TOTAL SHEETS	SHEET NO.
2937	116B-1	PULASKI	76	62

CONTRACT NO. 78793

ILLINOIS | FED. AID PROJECT

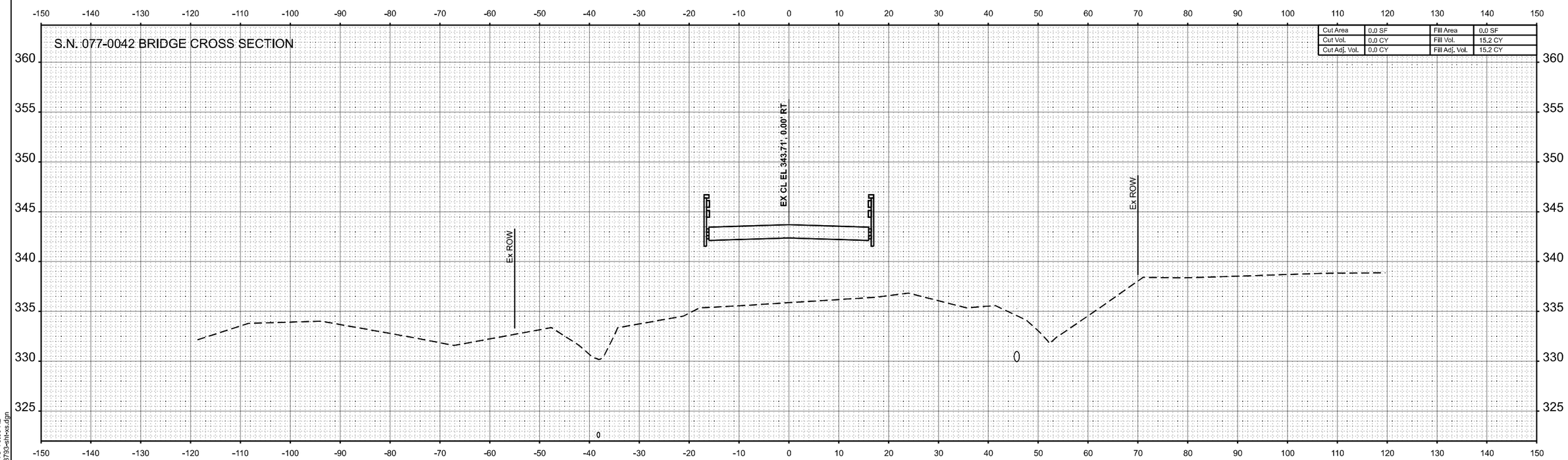

STA 78+75.00

MODEL: SHT - IL169 - 78+75.00 R2
FILE NAME: ...\Sheet\D978793-sht-xs.dgn

CMT
License No. 184-000613 © Copyright CMT, Inc.

USER NAME = Matt Overbey	DESIGNED - AJ	REVISED -	
	DRAWN - RAH	REVISED -	
	CHECKED - MJO	REVISED -	
PLOT DATE = 6/26/2025	DATE - 6/26/2025	REVISED -	

STATE OF ILLINOIS
DEPARTMENT OF TRANSPORTATION

F.A.S. 2937 (ILLINOIS ROUTE 169)
CROSS SECTIONS

SCALE: 1"=10' | SHEET 8 OF 21 SHEETS | STA. 78+75.00 R2 TO STA. 78+75.00 R2

F.A.S. RTE.	SECTION	COUNTY	TOTAL SHEETS	SHEET NO.
2937	116B-1	PULASKI	76	63
		CONTRACT NO. 78793		
		ILLINOIS FED. AID PROJECT		

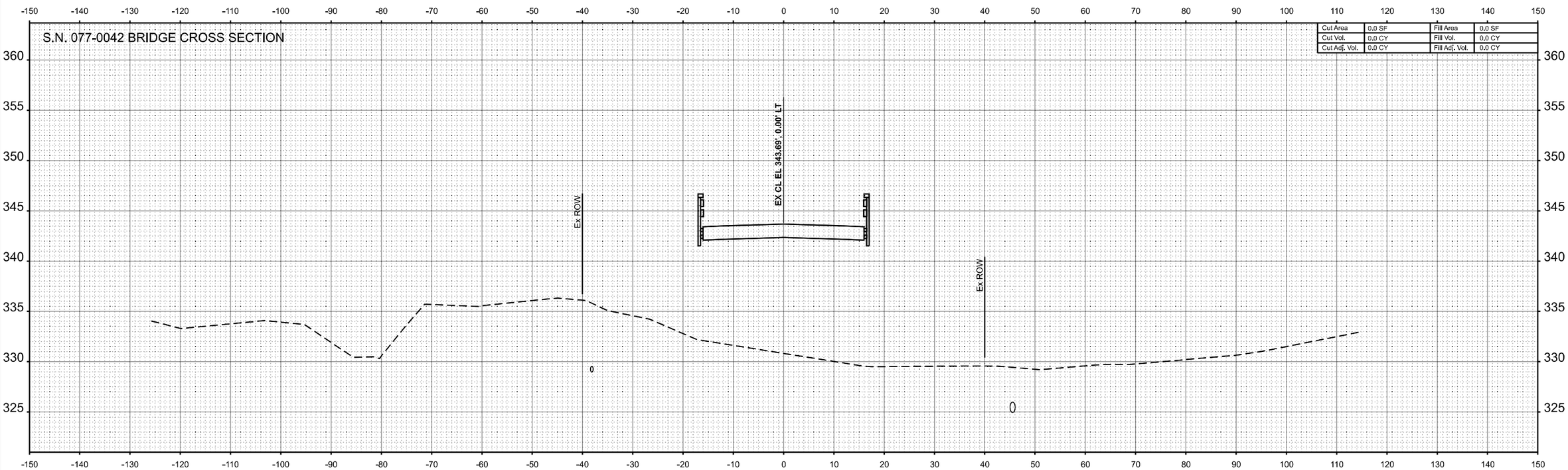

STA 79+00.00

MODEL: SHT - IL169 - 79+00.00 R2
FILE NAME: ...\Sheet\D978793-sht-xs.dgn

CMT
License No. 184-000613 © Copyright CMT, Inc.

USER NAME = Matt Overbey	DESIGNED - AJ	REVISED -	
	DRAWN - RAH	REVISED -	
	CHECKED - MJO	REVISED -	
PLOT DATE = 6/26/2025	DATE - 6/26/2025	REVISED -	

STATE OF ILLINOIS
DEPARTMENT OF TRANSPORTATION

F.A.S. 2937 (ILLINOIS ROUTE 169)
CROSS SECTIONS

SCALE: 1"=10' | SHEET 9 OF 21 SHEETS | STA. 79+00.00 R2 TO STA. 79+00.00 R2

F.A.S. RTE.	SECTION	COUNTY	TOTAL SHEETS	SHEET NO.
2937	116B-1	PULASKI	76	64
		CONTRACT NO. 78793		
		ILLINOIS	FED. AID PROJECT	

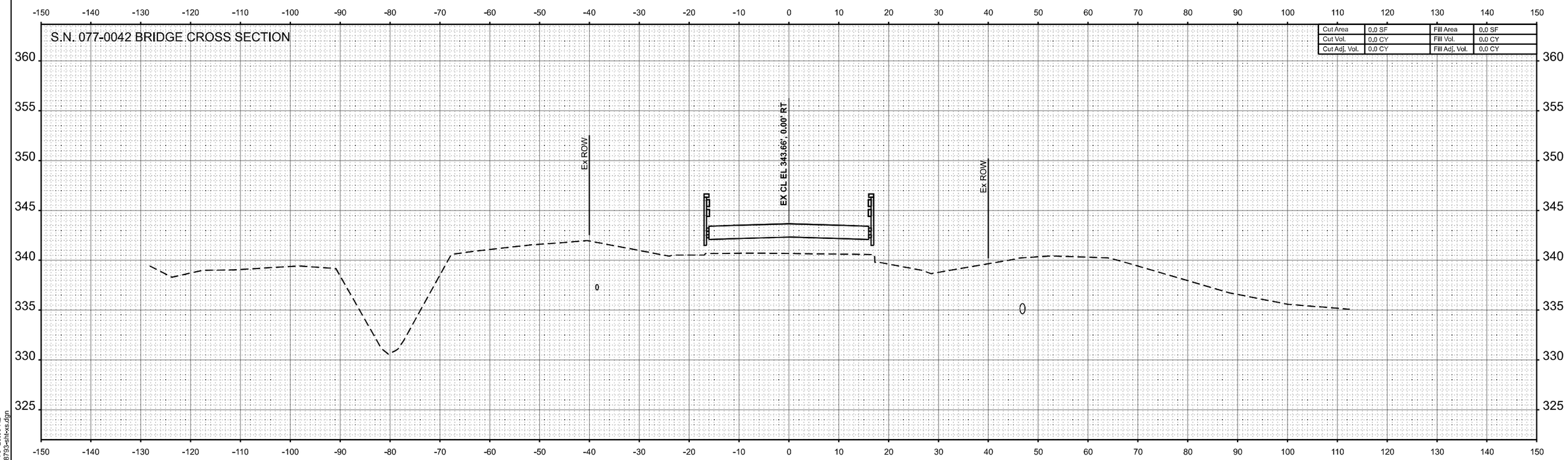

Cut Area	0.0 SF	Fill Area	0.0 SF
Cut Vol.	0.0 CY	Fill Vol.	0.0 CY
Cut Adj. Vol.	0.0 CY	Fill Adj. Vol.	0.0 CY

STA 79+25.00

MODEL: SHT - IL169 - 79+25.00 R2
FILE NAME: ...\Sheet\D978793-sht<xs.dgn

CMT
License No. 184-000613 © Copyright CMT, Inc.

USER NAME = Matt Overbey	DESIGNED - AJ	REVISED -	
	DRAWN - RAH	REVISED -	
	CHECKED - MJO	REVISED -	
PLOT DATE = 6/26/2025	DATE - 6/26/2025	REVISED -	

STATE OF ILLINOIS
DEPARTMENT OF TRANSPORTATION

F.A.S. 2937 (ILLINOIS ROUTE 169)
CROSS SECTIONS

SCALE: 1"=10' | SHEET 10 OF 21 SHEETS | STA. 79+25.00 R2 TO STA. 79+25.00 R2

F.A.S. RTE.	SECTION	COUNTY	TOTAL SHEETS	SHEET NO.
2937	116B-1	PULASKI	76	65

CONTRACT NO. 78793

ILLINOIS | FED. AID PROJECT

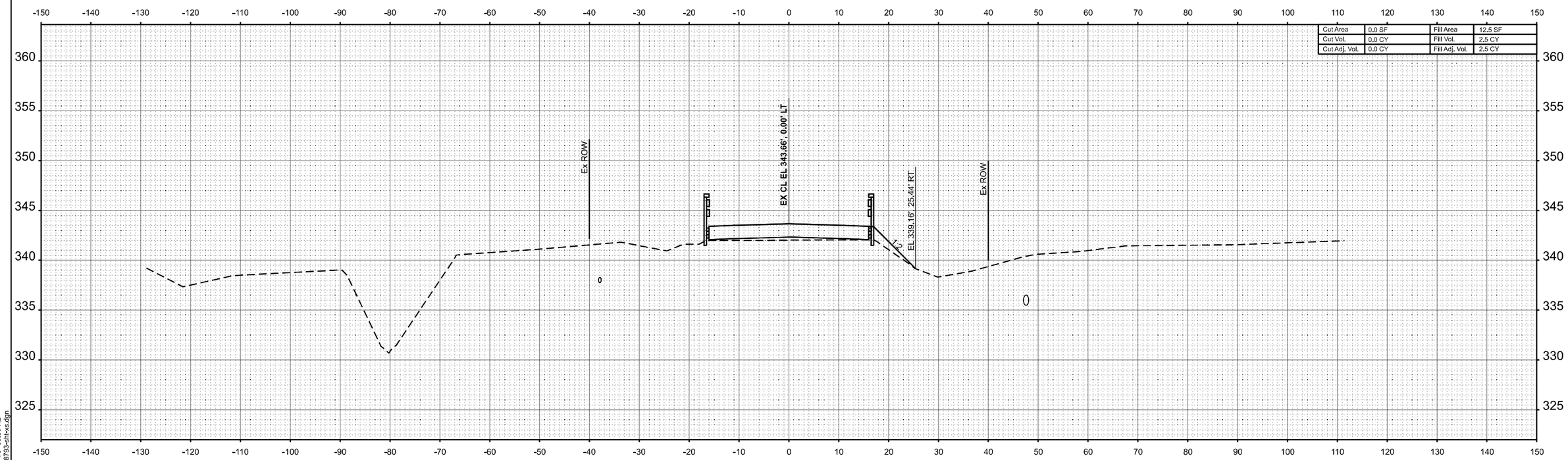

Cut Area	0.0 SF	Fill Area	12.5 SF
Cut Vol.	0.0 CY	Fill Vol.	2.5 CY
Cut Adj. Vol.	0.0 CY	Fill Adj. Vol.	2.5 CY

STA 79+35.80

MODEL: SHT - IL169 - 79+35.80 R2
FILE NAME: ...\Sheet\D978793-sht-xs.dgn

CMT
License No. 184-000613

USER NAME = Matt Overbey	DESIGNED - AJ	REVISED -	
	DRAWN - RAH	REVISED -	
	CHECKED - MJO	REVISED -	
PLOT DATE = 6/26/2025	DATE - 6/26/2025	REVISED -	

STATE OF ILLINOIS
DEPARTMENT OF TRANSPORTATION

F.A.S. 2937 (ILLINOIS ROUTE 169)
CROSS SECTIONS

SCALE: 1"=10' | SHEET 11 OF 21 SHEETS | STA. 79+35.80 R2 TO STA. 79+35.80 R2

F.A.S. RTE.	SECTION	COUNTY	TOTAL SHEETS	SHEET NO.
2937	116B-1	PULASKI	76	66

CONTRACT NO. 78793

ILLINOIS | FED. AID PROJECT

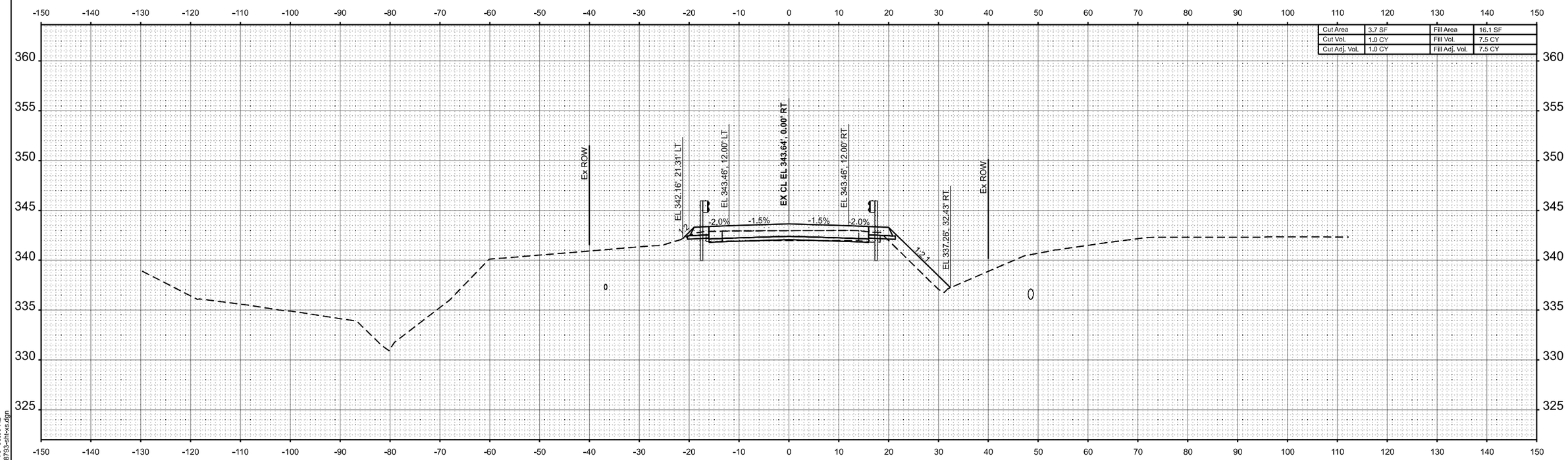

STA 79+50.00

MODEL: SHT - IL169 - 79+50.00 R2
FILE NAME: ...\Sheet\D978793-sht-xs.dgn

CMT
License No. 184-000613

USER NAME = Matt Overbey	DESIGNED - AJ	REVISED -	
	DRAWN - RAH	REVISED -	
	CHECKED - MJO	REVISED -	
PLOT DATE = 6/26/2025	DATE - 6/26/2025	REVISED -	

STATE OF ILLINOIS
DEPARTMENT OF TRANSPORTATION

F.A.S. 2937 (ILLINOIS ROUTE 169)
CROSS SECTIONS

SCALE: 1"=10' | SHEET 12 OF 21 SHEETS | STA. 79+50.00 R2 TO STA. 79+50.00 R2

F.A.S. RTE.	SECTION	COUNTY	TOTAL SHEETS	SHEET NO.
2937	116B-1	PULASKI	76	67

CONTRACT NO. 78793

ILLINOIS | FED. AID PROJECT

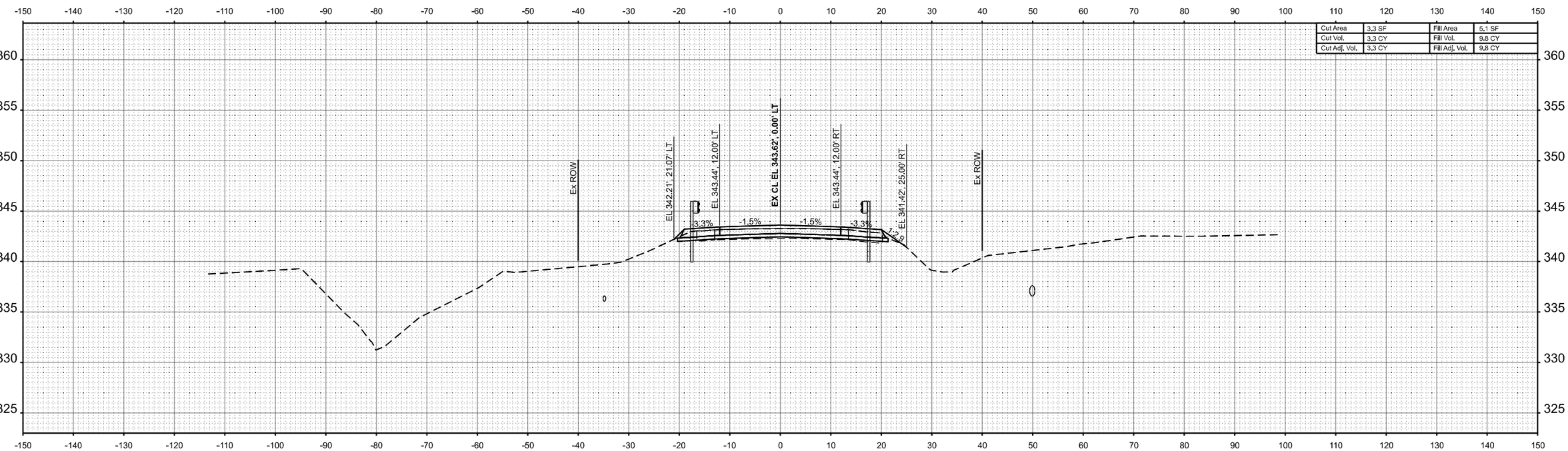

Cut Area	3.3 SF	Fill Area	5.1 SF
Cut Vol.	3.3 CY	Fill Vol.	9.5 CY
Cut Adj. Vol.	3.3 CY	Fill Adj. Vol.	9.8 CY

STA 79+75.00

MODEL: SHT - IL169 - 79+75.00 R2
FILE NAME: ...\Sheet\D978793-sht-xs.dgn

CMT
License No. 184-000613 © Copyright CMT, Inc.

USER NAME = Matt Overbey	DESIGNED - AJ	REVISED -
	DRAWN - RAH	REVISED -
	CHECKED - MJO	REVISED -
PLOT DATE = 6/26/2025	DATE - 6/26/2025	REVISED -

STATE OF ILLINOIS
DEPARTMENT OF TRANSPORTATION

F.A.S. 2937 (ILLINOIS ROUTE 169)
CROSS SECTIONS

SCALE: 1"=10' | SHEET 13 OF 21 SHEETS | STA. 79+75.00 R2 TO STA. 79+75.00 R2

F.A.S. RTE.	SECTION	COUNTY	TOTAL SHEETS	SHEET NO.
2937	116B-1	PULASKI	76	68

CONTRACT NO. 78793

ILLINOIS | FED. AID PROJECT

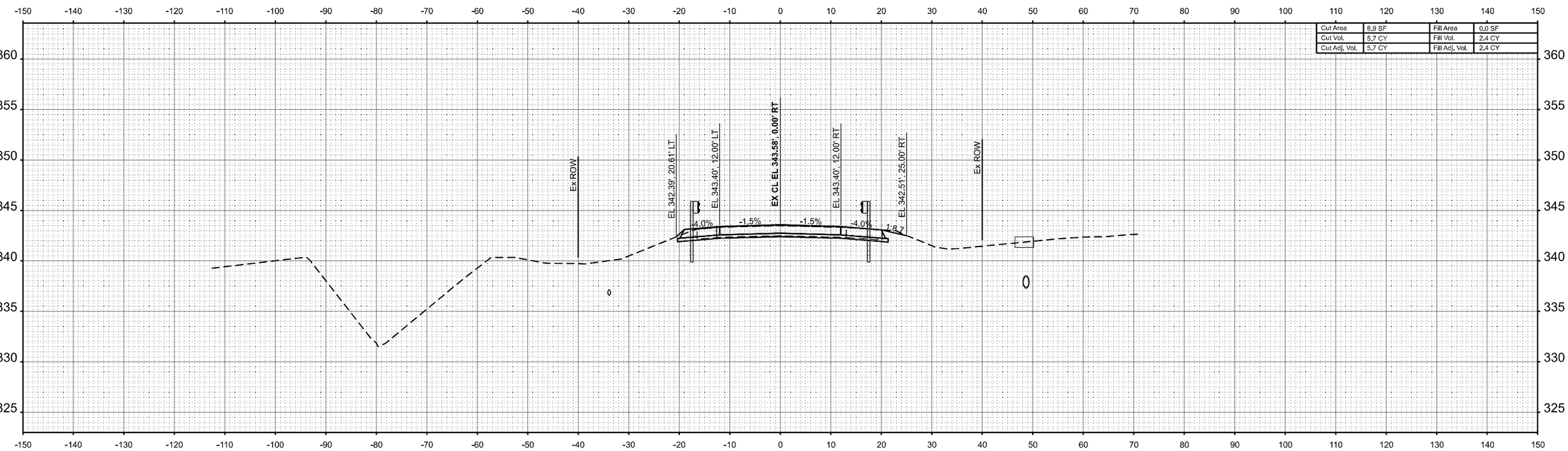

Cut Area	8.9 SF	Fill Area	0.0 SF
Cut Vol.	5.7 CY	Fill Vol.	2.4 CY
Cut Adj. Vol.	5.7 CY	Fill Adj. Vol.	2.4 CY

STA 80+00.00

MODEL: SHT - IL169 - 80+00.00 R2
FILE NAME: ...\Sheet\D978793-sht-xs.dgn

CMT
License No. 184-000613 © Copyright CMT, Inc.

USER NAME = Matt Overbey	DESIGNED - AJ	REVISED -	
	DRAWN - RAH	REVISED -	
	CHECKED - MJO	REVISED -	
PLOT DATE = 6/26/2025	DATE - 6/26/2025	REVISED -	

STATE OF ILLINOIS
DEPARTMENT OF TRANSPORTATION

F.A.S. 2937 (ILLINOIS ROUTE 169)
CROSS SECTIONS

SCALE: 1"=10' | SHEET 14 OF 21 SHEETS | STA. 80+00.00 R2 TO STA. 80+00.00 R2

F.A.S. RTE.	SECTION	COUNTY	TOTAL SHEETS	SHEET NO.
2937	116B-1	PULASKI	76	69

CONTRACT NO. 78793

ILLINOIS | FED. AID PROJECT

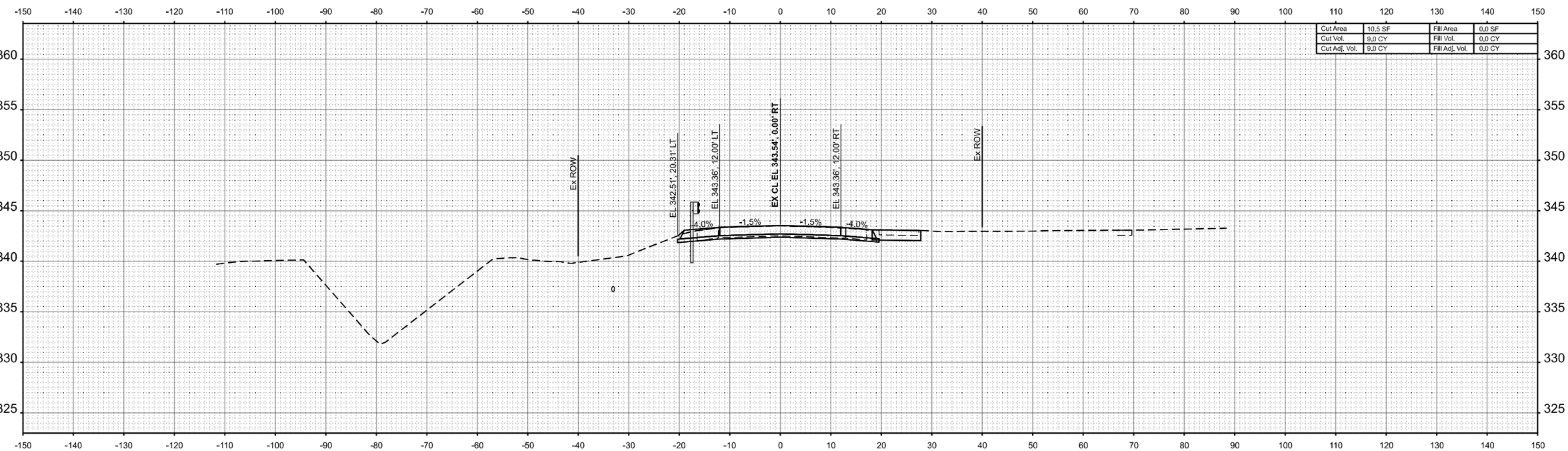

Cut Area	10.5 SF	Fill Area	0.0 SF
Cut Vol.	9.0 CY	Fill Vol.	0.0 CY
Cut Adj. Vol.	9.0 CY	Fill Adj. Vol.	0.0 CY

STA 80+25.00

MODEL: SHT - IL169 - 80+25.00 R2
FILE NAME: ...\Sheet\D978793-sht-xs.dgn

CMT
License No. 184-000613 © Copyright CMT, Inc.

USER NAME = Matt Overbey	DESIGNED - AJ	REVISED -
	DRAWN - RAH	REVISED -
	CHECKED - MJO	REVISED -
PLOT DATE = 6/26/2025	DATE - 6/26/2025	REVISED -

STATE OF ILLINOIS
DEPARTMENT OF TRANSPORTATION

F.A.S. 2937 (ILLINOIS ROUTE 169)
CROSS SECTIONS

SCALE: 1"=10' | SHEET 15 OF 21 SHEETS | STA. 80+25.00 R2 TO STA. 80+25.00 R2

F.A.S. RTE.	SECTION	COUNTY	TOTAL SHEETS	SHEET NO.
2937	116B-1	PULASKI	76	70

CONTRACT NO. 78793

ILLINOIS | FED. AID PROJECT

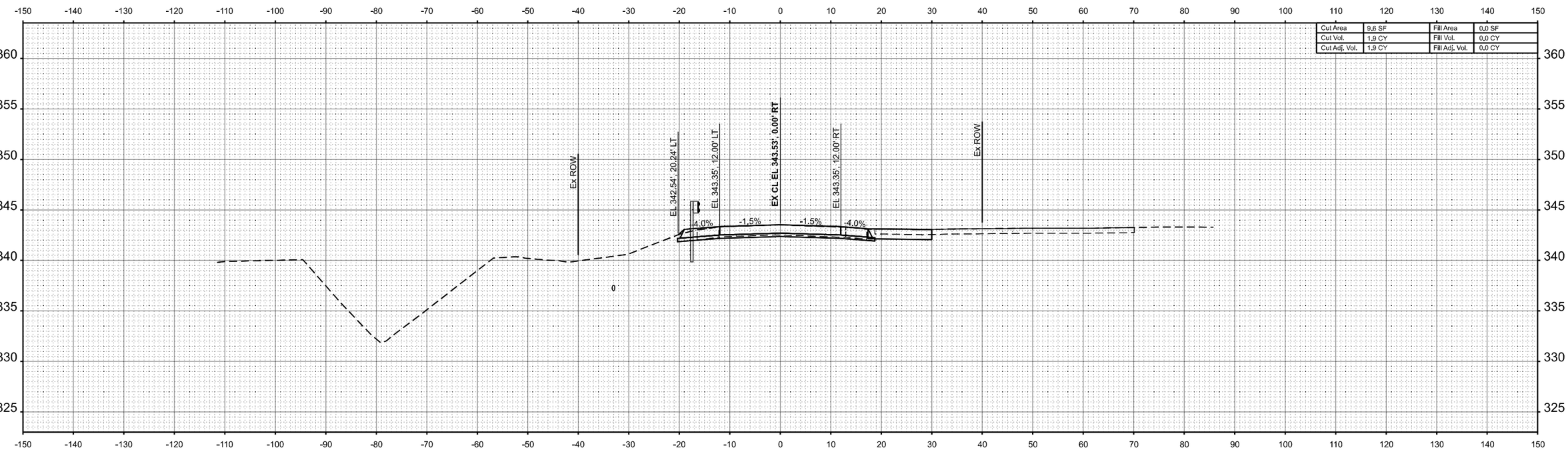

Cut Area	9.6 SF	Fill Area	0.0 SF
Cut Vol.	1.9 CY	Fill Vol.	0.0 CY
Cut Adj. Vol.	1.9 CY	Fill Adj. Vol.	0.0 CY

STA 80+29.99

MODEL: SHT - IL169 - 80+29.99 R2
FILE NAME: ...\Sheet\D978793-sht-xs.dgn

CMT
License No. 184-000613 © Copyright CMT, Inc.

USER NAME = Matt Overbey	DESIGNED - AJ	REVISED -	
	DRAWN - RAH	REVISED -	
	CHECKED - MJO	REVISED -	
PLOT DATE = 6/26/2025	DATE - 6/26/2025	REVISED -	

STATE OF ILLINOIS
DEPARTMENT OF TRANSPORTATION

F.A.S. 2937 (ILLINOIS ROUTE 169)
CROSS SECTIONS

SCALE: 1"=10' | SHEET OF SHEETS | STA. TO STA.

F.A.S. RTE.	SECTION	COUNTY	TOTAL SHEETS	SHEET NO.
2937	116B-1	PULASKI	76	71

CONTRACT NO. 78793

ILLINOIS | FED. AID PROJECT

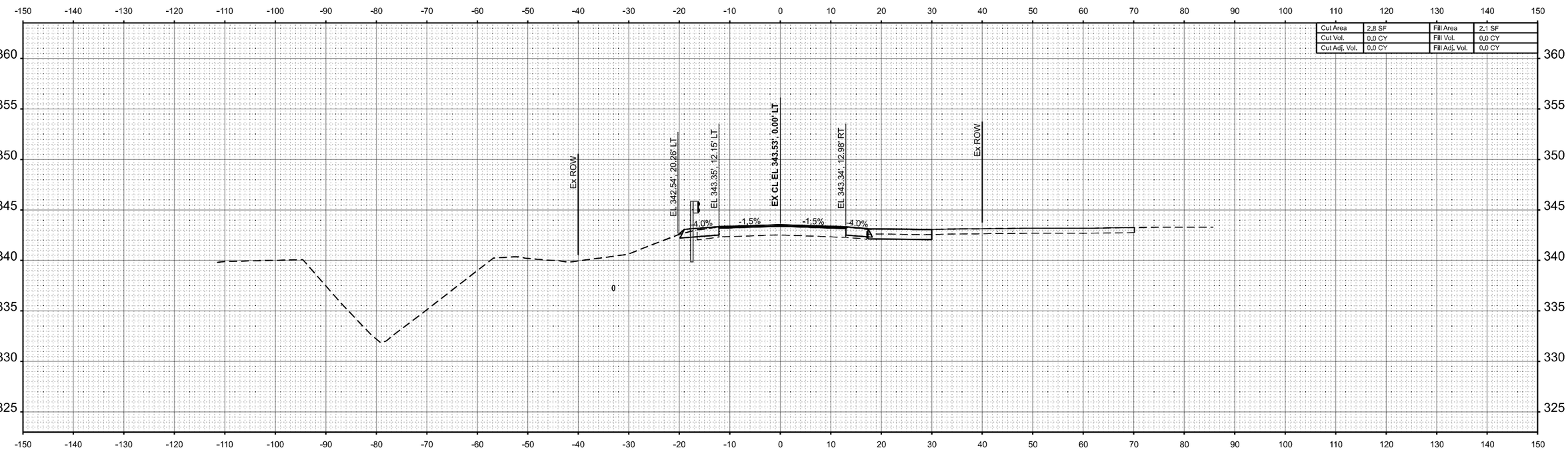

Cut Area	2.8 SF	Fill Area	2.1 SF
Cut Vol.	0.0 CY	Fill Vol.	0.0 CY
Cut Adj. Vol.	0.0 CY	Fill Adj. Vol.	0.0 CY

STA 80+30.01

MODEL: SHT - IL169 - 80+30.01 R2
FILE NAME: ...\Sheet\D978793-sht-xs.dgn

CMT
License No. 184-000613 © Copyright CMT, Inc.

USER NAME = Matt Overbey	DESIGNED - AJ	REVISED -
	DRAWN - RAH	REVISED -
	CHECKED - MJO	REVISED -
PLOT DATE = 6/26/2025	DATE - 6/26/2025	REVISED -

STATE OF ILLINOIS
DEPARTMENT OF TRANSPORTATION

F.A.S. 2937 (ILLINOIS ROUTE 169)
CROSS SECTIONS

SCALE: 1"=10' | SHEET 17 OF 21 SHEETS | STA. 80+30.01 R2 TO STA. 80+30.01 R2

F.A.S. RTE.	SECTION	COUNTY	TOTAL SHEETS	SHEET NO.
2937	116B-1	PULASKI	76	72

CONTRACT NO. 78793

ILLINOIS | FED. AID PROJECT

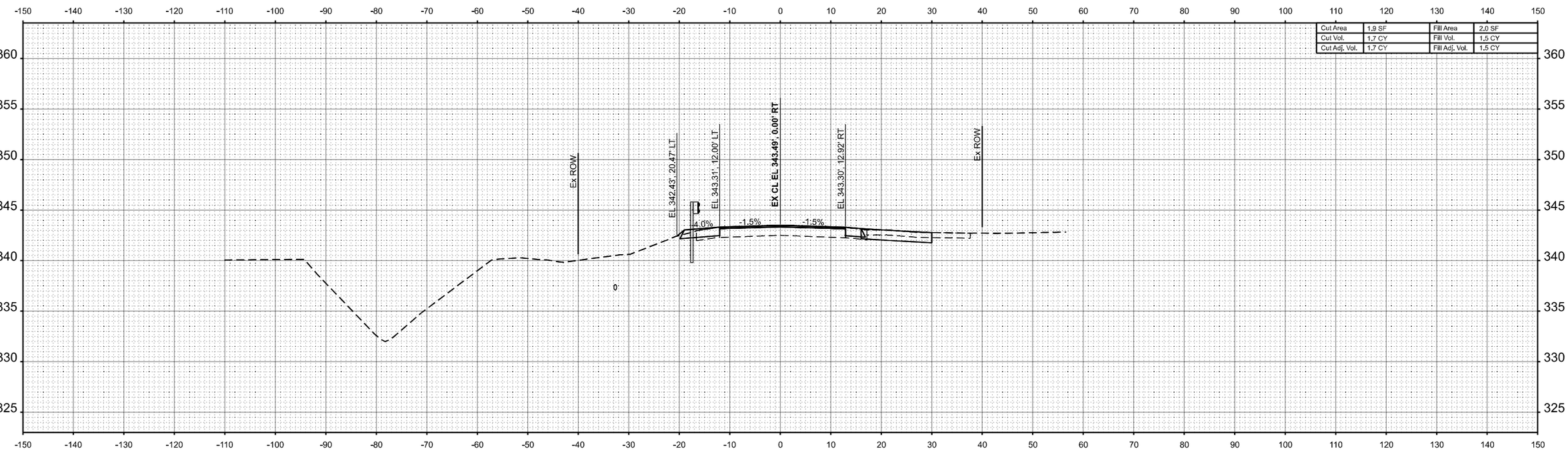

Cut Area	1.9 SF	Fill Area	2.0 SF
Cut Vol.	1.7 CY	Fill Vol.	1.5 CY
Cut Adj. Vol.	1.7 CY	Fill Adj. Vol.	1.5 CY

STA 80+50.00

MODEL: SHT - IL169 - 80+50.00 R2
FILE NAME: ...\Sheet\D978793-sht-xs.dgn

CMT
License No. 184-000613 © Copyright CMT, Inc.

USER NAME = Matt Overbey	DESIGNED - AJ	REVISED -
	DRAWN - RAH	REVISED -
	CHECKED - MJO	REVISED -
PLOT DATE = 6/26/2025	DATE - 6/26/2025	REVISED -

STATE OF ILLINOIS
DEPARTMENT OF TRANSPORTATION

F.A.S. 2937 (ILLINOIS ROUTE 169)
CROSS SECTIONS

SCALE: 1"=10' | SHEET 18 OF 21 SHEETS | STA. 80+50.00 R2 TO STA. 80+50.00 R2

F.A.S. RTE.	SECTION	COUNTY	TOTAL SHEETS	SHEET NO.
2937	116B-1	PULASKI	76	73

CONTRACT NO. 78793

ILLINOIS | FED. AID PROJECT

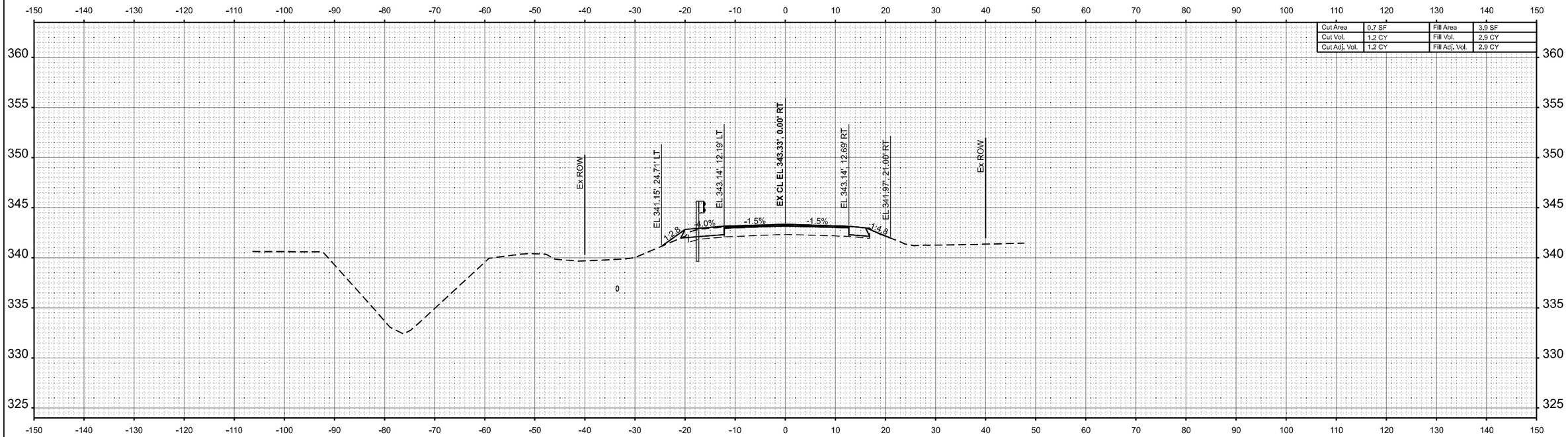

Cut Area	0.7 SF	Fill Area	3.9 SF
Cut Vol.	1.2 CY	Fill Vol.	2.9 CY
Cut Adj. Vol.	1.2 CY	Fill Adj. Vol.	2.9 CY

STA 81+00.00

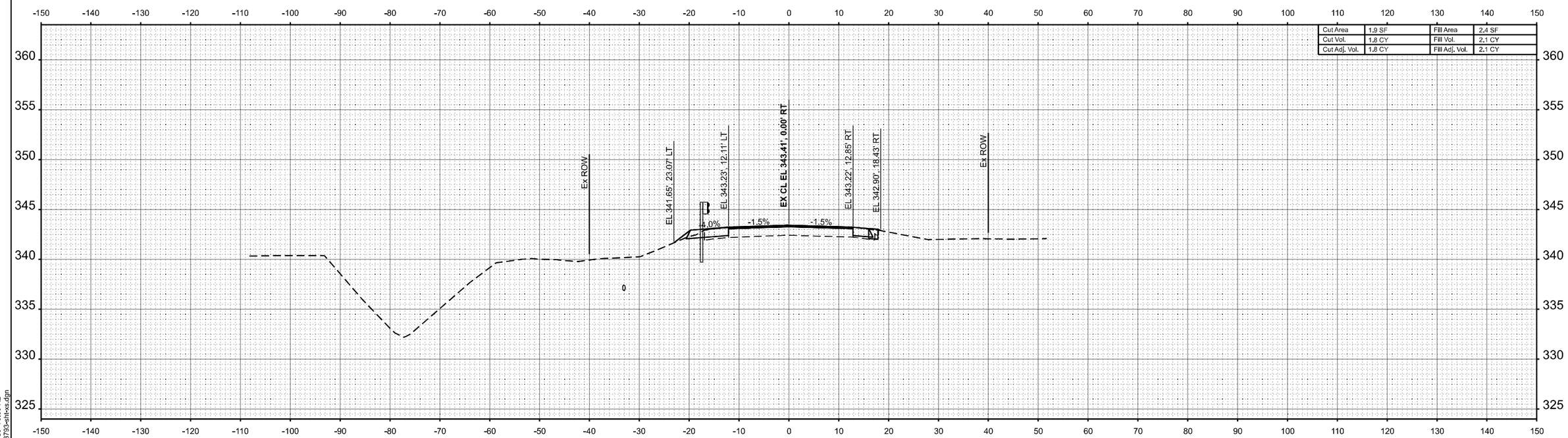

Cut Area	1.9 SF	Fill Area	2.4 SF
Cut Vol.	1.8 CY	Fill Vol.	2.1 CY
Cut Adj. Vol.	1.8 CY	Fill Adj. Vol.	2.1 CY

STA 80+75.00

MODEL: SHT - IL169 - 80+75.00 R2
FILE NAME: ...\Sheet\D978793-sht-xs.dgn

CMT
License No. 184-000613 © Copyright CMT, Inc.

USER NAME = Matt Overbey	DESIGNED - AJ	REVISED -
	DRAWN - RAH	REVISED -
	CHECKED - MJO	REVISED -
PLOT DATE = 6/26/2025	DATE - 6/26/2025	REVISED -

STATE OF ILLINOIS
DEPARTMENT OF TRANSPORTATION

F.A.S. 2937 (ILLINOIS ROUTE 169)
CROSS SECTIONS

SCALE: 1"=10' | SHEET 19 OF 21 SHEETS | STA. 80+75.00 R2 TO STA. 81+00.00 R2

F.A.S. RTE.	SECTION	COUNTY	TOTAL SHEETS	SHEET NO.
2937	116B-1	PULASKI	76	74
		CONTRACT NO. 78793		
		ILLINOIS	FED. AID PROJECT	

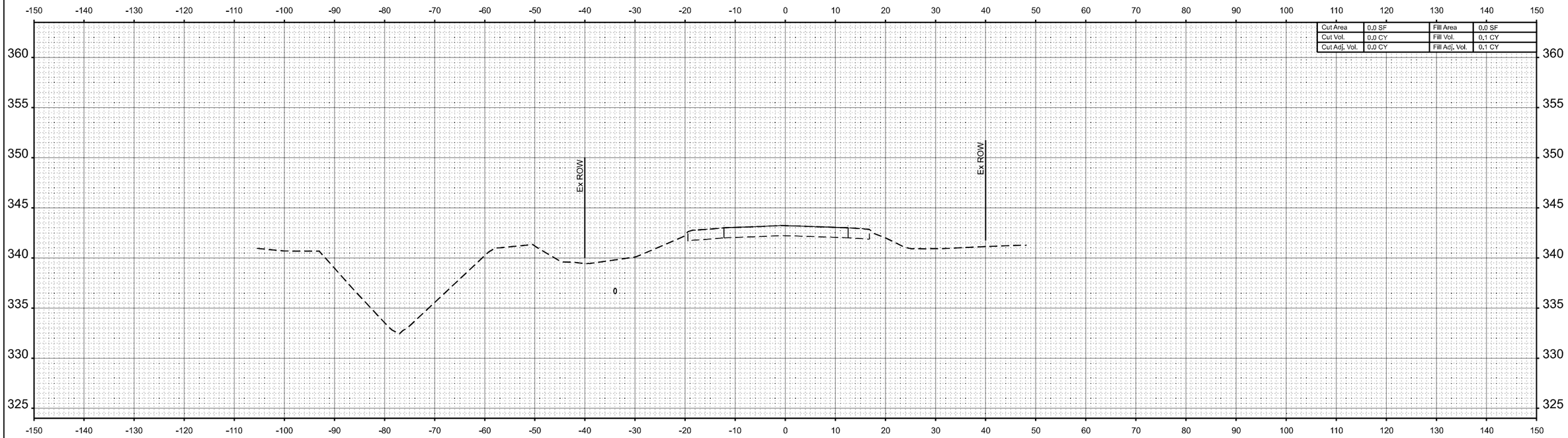

Cut Area	0.0 SF	Fill Area	0.0 SF
Cut Vol.	0.0 CY	Fill Vol.	0.1 CY
Cut Adj. Vol.	0.0 CY	Fill Adj. Vol.	0.1 CY

STA 81+25.00

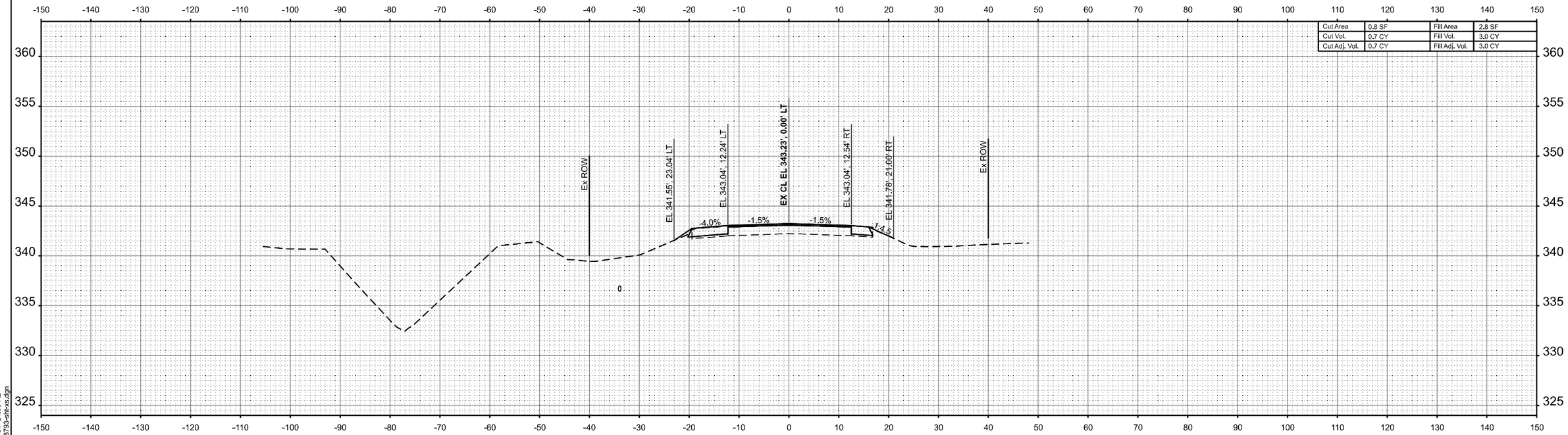

Cut Area	0.8 SF	Fill Area	2.8 SF
Cut Vol.	0.7 CY	Fill Vol.	3.0 CY
Cut Adj. Vol.	0.7 CY	Fill Adj. Vol.	3.0 CY

STA 81+24.00

MODEL: SHT - IL169 - 81+24.00 R2
FILE NAME: ...\Sheet\D978793-sht-xs.dgn

CMT
License No. 184-000613

USER NAME = Matt Overbey	DESIGNED - AJ	REVISED -
	DRAWN - RAH	REVISED -
	CHECKED - MJO	REVISED -
PLOT DATE = 6/26/2025	DATE - 6/26/2025	REVISED -

STATE OF ILLINOIS
DEPARTMENT OF TRANSPORTATION

F.A.S. 2937 (ILLINOIS ROUTE 169)
CROSS SECTIONS

SCALE: 1"=10' | SHEET OF SHEETS | STA. TO STA.

F.A.S. RTE.	SECTION	COUNTY	TOTAL SHEETS	SHEET NO.
2937	116B-1	PULASKI	76	75
		CONTRACT NO. 78793		
		ILLINOIS	FED. AID PROJECT	

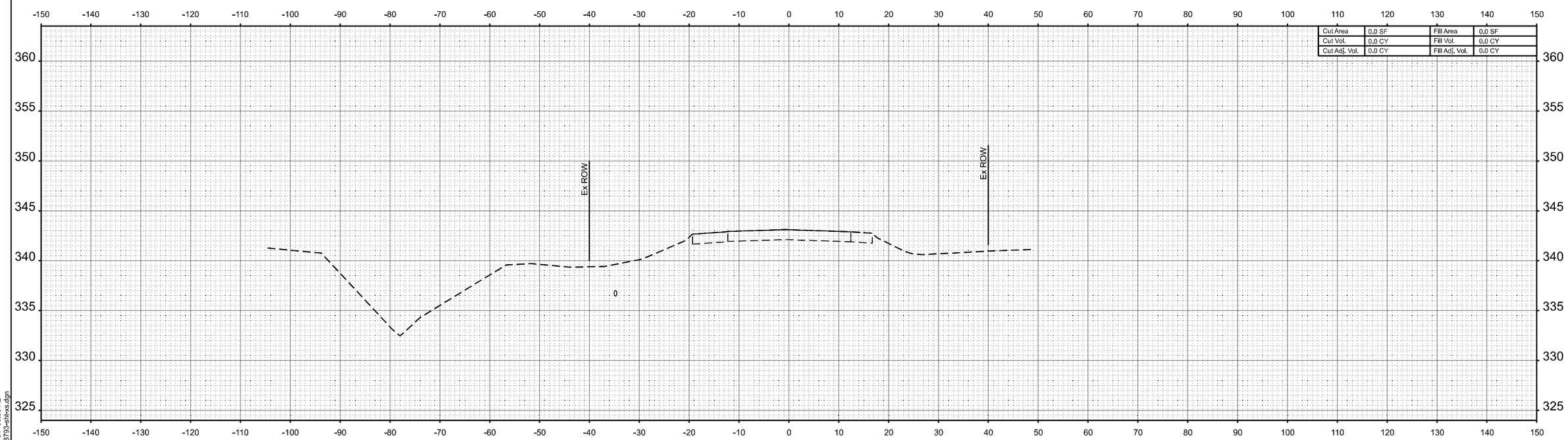

Cut Area	0.0 SF	Fill Area	0.0 SF
Cut Vol.	0.0 CY	Fill Vol.	0.0 CY
Cut Adj. Vol.	0.0 CY	Fill Adj. Vol.	0.0 CY

STA 81+50.00

MODEL: SHT - IL169 - 81+50.00 R2
FILE NAME: ...\Sheet\D978793-sht-xs.dgn

CMT
License No. 184-000613 © Copyright CMT, Inc.

USER NAME = Matt Overbey	DESIGNED - AJ	REVISED -
	DRAWN - RAH	REVISED -
	CHECKED - MJO	REVISED -
PLOT DATE = 6/26/2025	DATE - 6/26/2025	REVISED -

STATE OF ILLINOIS
DEPARTMENT OF TRANSPORTATION

F.A.S. 2937 (ILLINOIS ROUTE 169)
CROSS SECTIONS

SCALE: 1"=10' | SHEET 21 OF 21 SHEETS | STA. 81+50.00 R2 TO STA. 81+50.00 R2

F.A.S. RTE.	SECTION	COUNTY	TOTAL SHEETS	SHEET NO.
2937	116B-1	PULASKI	76	76

CONTRACT NO. 78793

ILLINOIS | FED. AID PROJECT