All steel rail elements shall be galvanized according to Article 509.05 of the Standard Specifications.

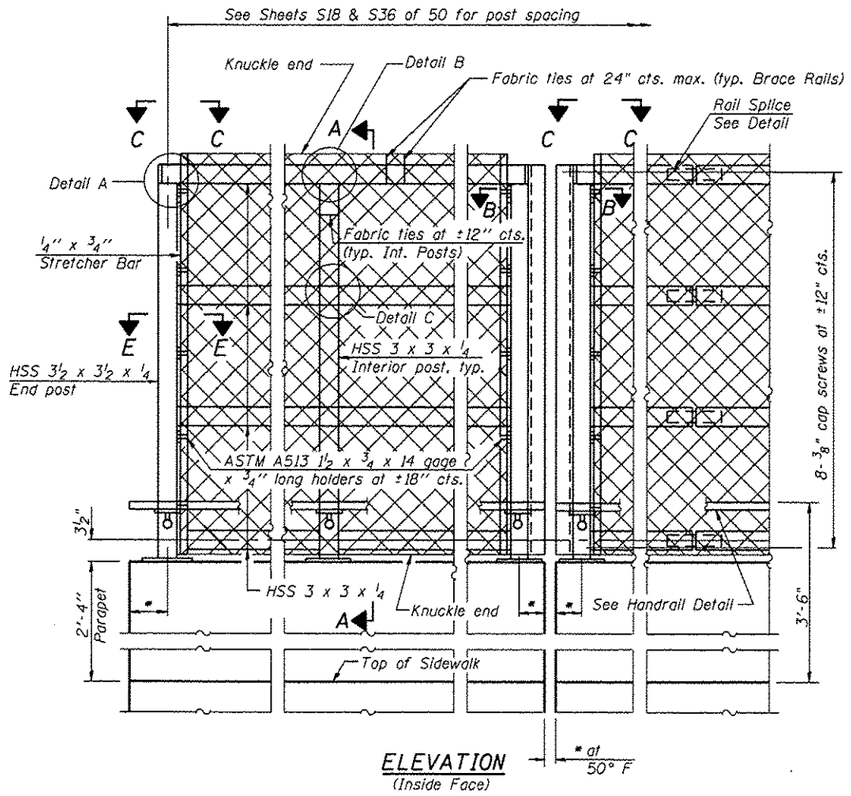

ELEVATION
(Inside Face)

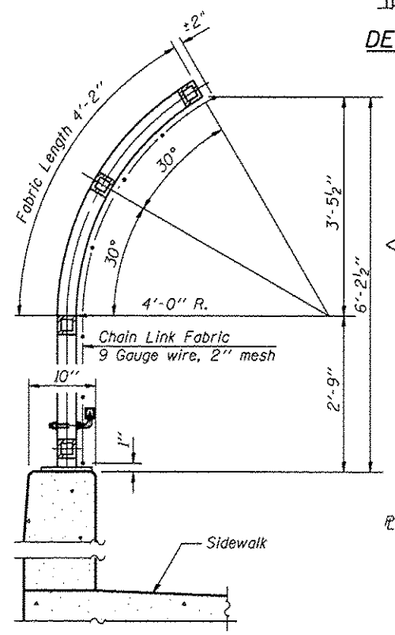

SECTION A-A

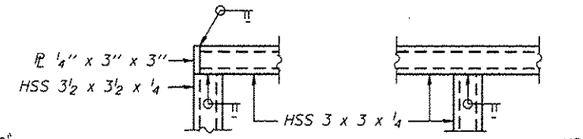

DETAIL A DETAIL B DETAIL C

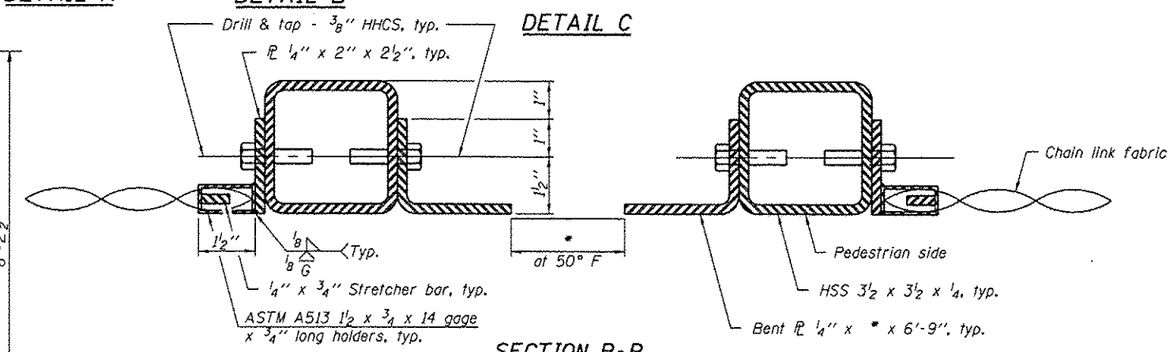

SECTION B-B
(At Expansion Joint)

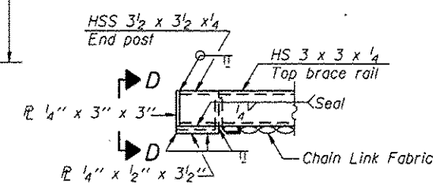

VIEW C-C

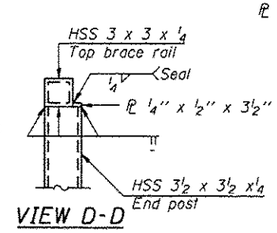

VIEW D-D

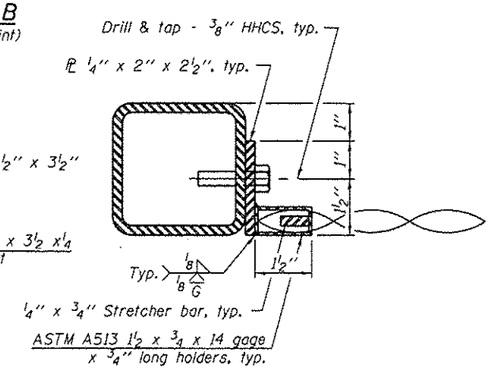

SECTION E-E

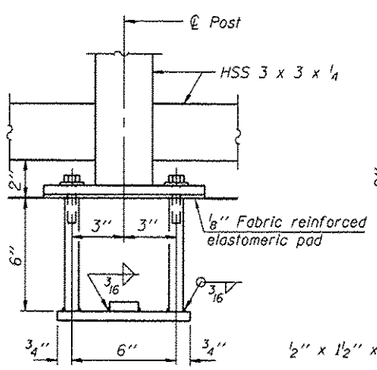

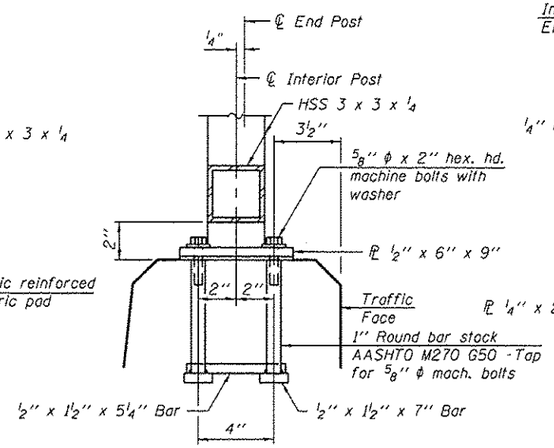

ANCHOR BOLT DETAILS

In lieu of the cast-in-place anchor device shown, the Contractor has the option of drilling and setting 5/8" ϕ anchor rods according to Article 509.06 of the Standard Specifications. Embedment shall be according to the manufacturer's specifications.

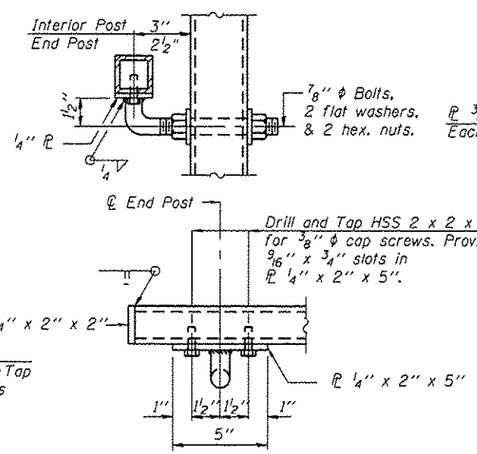

HANDRAIL DETAIL

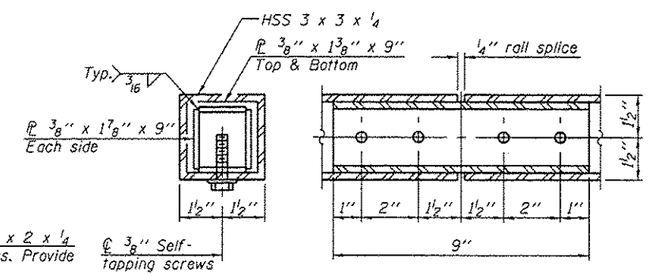

RAIL SPLICE

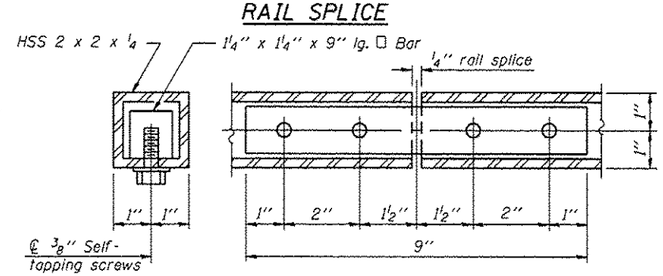

HANDRAIL SPLICE

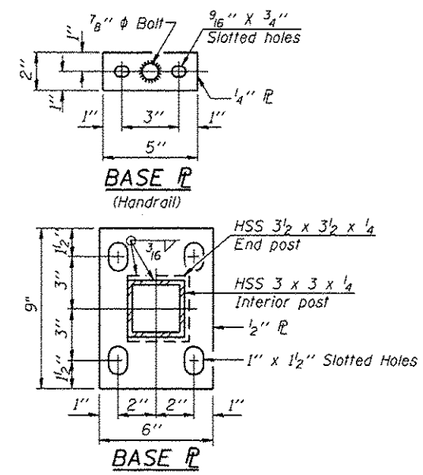

BILL OF MATERIAL

Item	Unit	Quantity
Bridge Fence Railing	Foot	755

*Variable - See Plans (10'-0" Maximum Post Spacing)

R-32 7-1-10

H:\Jobs2011\2011022\CAD\Structure\dgn\016-1149_Final\00\0160J15-s22-railing.dgn 5/20/2013 11:24:06 AM

GRAEF
8501 W. Higgins Road; Suite 280
Chicago, Illinois 60631; (773) 399-0112

USER NAME =	DESIGNED - J.Z.	REVISED -
	CHECKED - J.A.Z.	REVISED -
PLOT SCALE =	DRAWN - E.E.J.	REVISED -
PLOT DATE =	DATE - 5/17/2013	REVISED -

STATE OF ILLINOIS
DEPARTMENT OF TRANSPORTATION

BRIDGE FENCE RAILING, PARAPET MOUNTED
STRUCTURE NO. 016-1149
SHEET NO. S22 OF 50 SHEETS

F.A.I. RTE.	SECTION	COUNTY	TOTAL SHEETS	SHEET NO.
94	1920-B	COOK	137	81

CONTRACT NO. 60J15
ILLINOIS FED. AID PROJECT