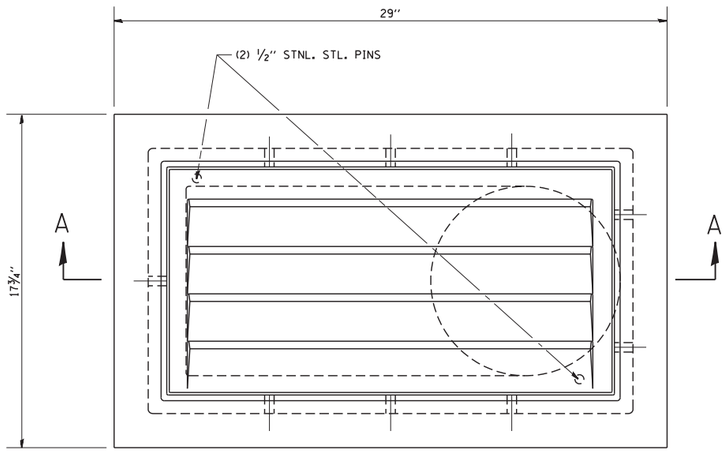

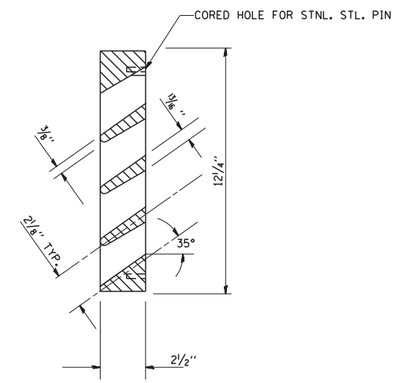

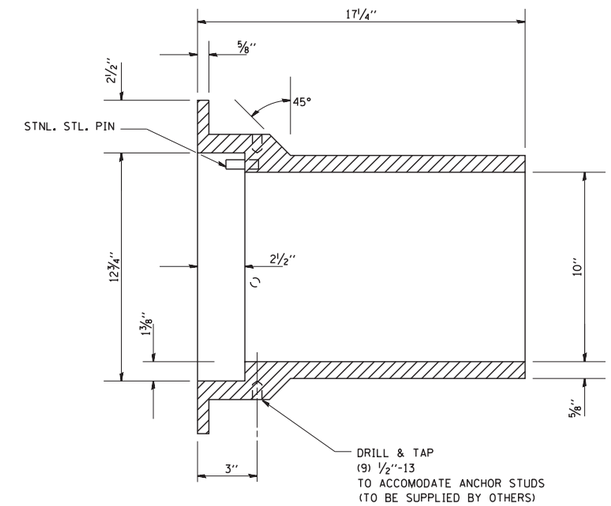

BRIDGE SCUPPER - TYPE "B"

NF - 0332 435
ESTIMATED WEIGHT 235#

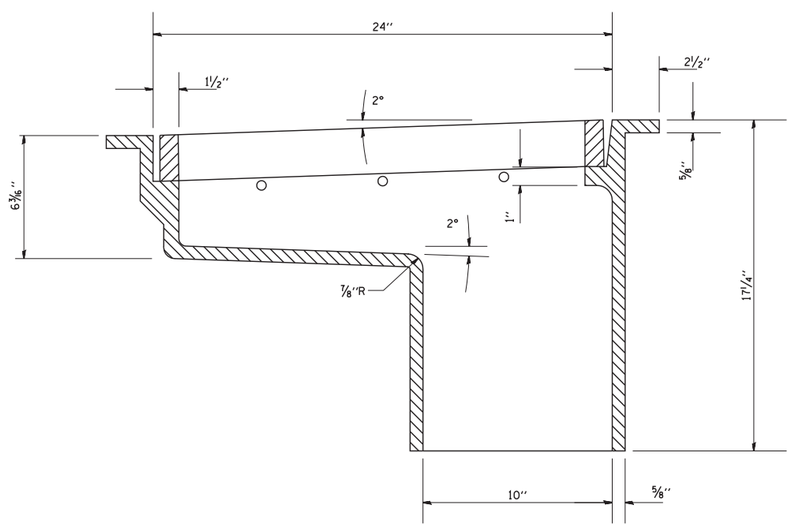

SECTION A-A

SCHEDULE OF QUANTITIES	
STRUCTURE	NO. REQUIRED
TOTAL	

MATERIAL: CAST GREY IRON ASTM A-48, CLASS 35B

FINISH: NONE

NOTE: A NEOPRENE PAD SHALL BE PROVIDED BETWEEN THE SCUPPER AND THE BEAM. (BY OTHERS.)

FILE NAME = W:\diststd\22x34\cs02.dgn	USER NAME = gaglianobt	DESIGNED -	REVISED - 10-18-02
		DRAWN -	REVISED -
	PLOT SCALE = 50.0000 ' / IN.	CHECKED -	REVISED -
	PLOT DATE = 1/4/2008	DATE -	REVISED -

STATE OF ILLINOIS
DEPARTMENT OF TRANSPORTATION

EXPRESSWAY UNIT DETAIL
BRIDGE SCUPPER TYPE "B"

SCALE: NONE | SHEET NO. 1 OF 1 SHEETS | STA. | TO STA.

F.A.I. RTE.	SECTION	COUNTY	TOTAL SHEETS	SHEET NO.
55	22-1HB-R	COOK/DUPAGE	161	138
	CS-02	CONTRACT NO. 60K77		
FED. ROAD DIST. NO. 1	ILLINOIS	FED. AID PROJECT		