CODE NO.	ITEM	UNIT	TOTAL QUANTITY	CONSTR. CODE 100% STATE UTILITY 0043 URBAN
X0370141	DUCTILE IRON WATER PIPE RESTRAINED JOINT - 24"	FOOT	140	140
X0370142	DUCTILE IRON WATER PIPE RESTRAINED JOINT - 48"	FOOT	420	420
X0370143	STEEL CASINGS 72"	FOOT	50	50
X0370144	DUCTILE IRON WATER PIPE FITTINGS-48"X24" 3 BELL MECHANICAL JOINT TEE	EACH	3	3
X0370145	DUCTILE IRON WATER PIPE FITTINGS-48" 2 BELL MECHANICAL JOINT 1/4 BEND	EACH	2	2
X0370146	DUCTILE IRON WATER PIPE FITTINGS-48" MECHANICAL JOINT SLEEVE	EACH	1	1
X0370147	DUCTILE IRON WATER PIPE FITTINGS-48" 2 BELL MECHANICAL JOINT 1/8 BEND	EACH	5	5
X0370148	DUCTILE IRON WATER PIPE FITTINGS-48" 2 BELL MECHANICAL JOINT 1/16 BEND	EACH	2	2
X0370149	54" R&S X MECHANICAL JOINT TRANSITION COUPLING	EACH	1	1
X0370150	54"X48" 2 BELL MECHANICAL JOINT REDUCER	EACH	1	1
X0370151	DUCTILE IRON WATER PIPE FITTINGS-24" 2 BELL MECHANICAL JOINT 1/8 BEND	EACH	7	7
~~X0370152~~	~~DUCTILE IRON WATER PIPE FITTINGS-24" 2 BELL MECHANICAL JOINT 1/16 BEND~~	~~EACH~~	~~2~~	~~2~~
~~X0370153~~	~~DUCTILE IRON WATER PIPE FITTINGS-24" MECHANICAL JOINT SLEEVE~~	~~EACH~~	~~1~~	~~1~~

1 Rev. 9-11-13

AECOM
303 EAST WACKER DRIVE, SUITE 1400
CHICAGO, IL 60601-5276
PHONE: (312) 373-7700 FAX: (312) 373-6800

D160X27-sht-S00-01	DESIGNED - MSC	REVISED -
USER NAME = ohiwo	DRAWN - MSC	REVISED -
PLOT SCALE = 50.0000 ' / in.	CHECKED - RBB	REVISED -
PLOT DATE = 8/21/2013	DATE - 8/21/13	REVISED -

STATE OF ILLINOIS
DEPARTMENT OF TRANSPORTATION

SUMMARY OF QUANTITIES

SCALE: | SHEET 1 OF 2 SHEETS | STA. | TO STA.

F.A.I. RTE.	SECTION	COUNTY	TOTAL SHEETS	SHEET NO.
90/94/290	2013-051T	COOK	5	3

CONTRACT NO. 60X27

ILLINOIS FED. AID PROJECT

FILE PATH = pw:\\388859-pwrtl.aecomonline.local:PWAECOM88\Documents\01 Americas\Transportation\60264938 Circle\Phase II\003 CAD\006 Roadway\Sheets\60X27 Contract\D160X27-sht-S00-01

CODE NO.	ITEM	UNIT	TOTAL QUANTITY	CONSTR. CODE 100% STATE UTILITY 0043 URBAN
X0370154	WATER MAIN CONTROL VALVE-48 INCH BUTTERFLY VALVE	EACH	2	2
X0370155	DUCTILE IRON WATER PIPE FITTINGS-48"X12" 3 BELL MECHANICAL JOINT TEE	EACH	1	1
X0370156	DUCTILE IRON WATER PIPE FITTINGS-24" MECHANICAL JOINT TRANSITION SLEEVE	EACH	1	1
X0370157	DUCTILE IRON WATER PIPE FITTINGS-48" MECHANICAL JOINT TRANSITION SLEEVE	EACH	1	1
X0370158	DUCTILE IRON WATER PIPE FITTINGS - 24"X16" 2 BELL MECHANICAL JOINT REDUCER	EACH	2	2
X0370159	DUCTILE IRON WATER PIPE FITTINGS - 48" RESTRAINED JOINT PLUG	EACH	1	1
X0370160	DUCTILE IRON WATER PIPE FITTINGS - 48" RESTRAINED JOINT CAP	EACH	1	1
X0370161	WATER MAIN CONTROL VALVE-16 INCH GATE VALVE	EACH	1	1

1

VALVE SIZE	A	B	C	D	E	F	G	X
24-INCH	18⅝"	18⅝"	31⅝"	13½"	1⅞"	16 ¾"	30"	6¾"
30-INCH	21½"	24⅝"	39"	18"	1 15/16"	20 1"	36⅛"	10"
36-INCH	25 7/16"	28¼"	45⅝"	22"	2"	24 1"	43¾"	14"
42-INCH	29½"	32⅛"	53"	22"	2"	28 1¼"	50⅜"	14"
48-INCH	34 1/16"	37¼"	59⅝"	24"	2"	32 1¼"	57½"	16"

OPERATOR SIZE	J	L	M	N	P	O	Y	VALVE	APPROX. TURNS
T-425	7⅞"	6"	7⅛"	6⅞"	9½"	6⅝"	24"	36"	15
T-425	8"	6⅞"	7⅛"	6⅞"	9½"	6⅝"	24"	48"	127

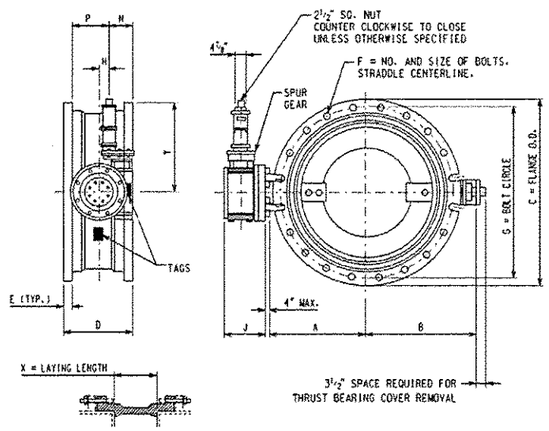

INSTALLATION DIAGRAM

NOTE:

1. BUTTERFLY VALVES SHALL BE MANUFACTURED IN ACCORDANCE WITH AWWA SPECIFICATION C-504-87, CLASS 150B, SHORT BODY VALVE WITH MECHANICAL JOINT ACCESSORIES.
2. OPERATORS ARE EQUIPPED WITH OPEN/CLOSE INDICATING ARROW. ASSEMBLY OPEN CLOCKWISE.

REV107.07

BUTTERFLY VALVE

FM-13

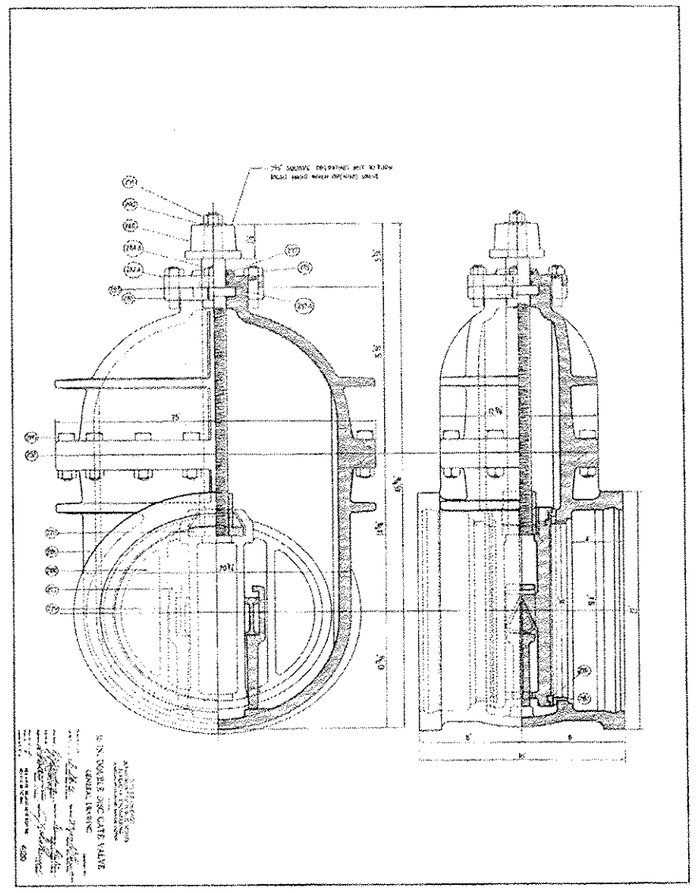

1

FILE PATH = pw:\\188835-pwnt1.aecomonline.local:PW\AECOM08\Documents\01 Americas\Transportation\60269938 Circle\Phase II\003_CAD\006_Roadway\Sheets\60X27_Contract\D160X27-sht-WM-01.dgn

AECOM
303 EAST WACKER DRIVE, SUITE 1400
CHICAGO, IL 60601-5276
PHONE: (312) 373-7700 FAX: (312) 373-6800

D160X27-sht-WM-01.dgn	DESIGNED - MSC	REVISED - 1 9/9/2013	
USER NAME = CooperM2	DRAWN - MSC	REVISED -	
PLOT SCALE = 40.0000 ' / in.	CHECKED - RBB	REVISED -	
PLOT DATE = 9/9/2013	DATE - 8/21/13	REVISED -	

STATE OF ILLINOIS
DEPARTMENT OF TRANSPORTATION

WATER MAIN DETAILS

SCALE: NONE | SHEET 1 OF 1 SHEETS | STA. TO STA.

F.A.I. RTE.	SECTION	COUNTY	TOTAL SHEETS	SHEET NO.
90/94/290	2013-051T	COOK	5	5

CONTRACT NO. 60X27

ILLINOIS FED. AID PROJECT