VALVE SIZE	A	B	C	D	E	F	G	X
24-INCH	18 5/8"	18 3/8"	31 9/16"	13 1/4"	1 5/8"	16 3/4"	30"	6 3/8"
30-INCH	21 1/2"	24 3/8"	39"	18"	1 13/16"	20 1"	36 7/8"	10"
36-INCH	25 7/16"	28 1/4"	45 7/8"	22"	2"	24 1"	43 3/4"	14"
42-INCH	29 7/8"	32 7/8"	53"	22"	2"	28 1 1/4"	50 5/8"	14"
48-INCH	34 1/16"	37 7/8"	59 7/8"	24"	2"	32 1 1/4"	57 1/2"	16"

OPERATOR SIZE	J	L	M	N	P	O	Y	VALVE	NO. OF TURNS
T-425	7 3/8"	6"	7 1/8"	6 7/8"	9 1/2"	6 5/8"	24"	36"	75
T-425	8"	6 5/8"	7 1/8"	6 7/8"	9 1/2"	6 5/8"	24"	48"	127

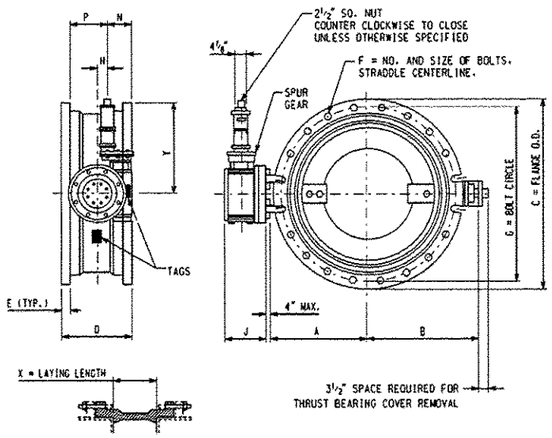

INSTALLATION DIAGRAM

NOTE:

1. BUTTERFLY VALVES SHALL BE MANUFACTURED IN ACCORDANCE WITH AWWA SPECIFICATION C-504-87. CLASS 150B. SHORT BODY VALVE WITH MECHANICAL JOINT ACCESSORIES.
2. OPERATORS ARE EQUIPPED WITH OPEN/CLOSE INDICATING ARROW. ASSEMBLY OPEN CLOCKWISE.

REV:07.07

BUTTERFLY VALVE

FM-13

FILE PATH = pw:\\386039-pwintl.aecomonline.local:PWAECOM08\Documents\01 Americas\Transportation\60269938 Circle\Phase II\000.CAD\006.Roadway\Sheets\60X27_Contract\D160X27-sht-WM-01.dgn

AECOM
303 EAST WACKER DRIVE, SUITE 1400
CHICAGO, IL 60601-5276
PHONE: (312) 373-7700 FAX: (312) 373-6800

D160X27-sht-WM-01.dgn	DESIGNED - MSC	REVISED -
USER NAME = pimsarno	DRAWN - MSC	REVISED -
PLOT SCALE = 20.0000 ' / in.	CHECKED - RBB	REVISED -
PLOT DATE = 8/21/2013	DATE - 8/21/13	REVISED -

STATE OF ILLINOIS
DEPARTMENT OF TRANSPORTATION

WATER MAIN DETAILS

SCALE: NONE | SHEET 1 OF 1 SHEETS | STA. TO STA.

F.A.I. RTE.	SECTION	COUNTY	TOTAL SHEETS	SHEET NO.
90/94/290	2013-051T	COOK	5	5

CONTRACT NO. 60X27

ILLINOIS FED. AID PROJECT