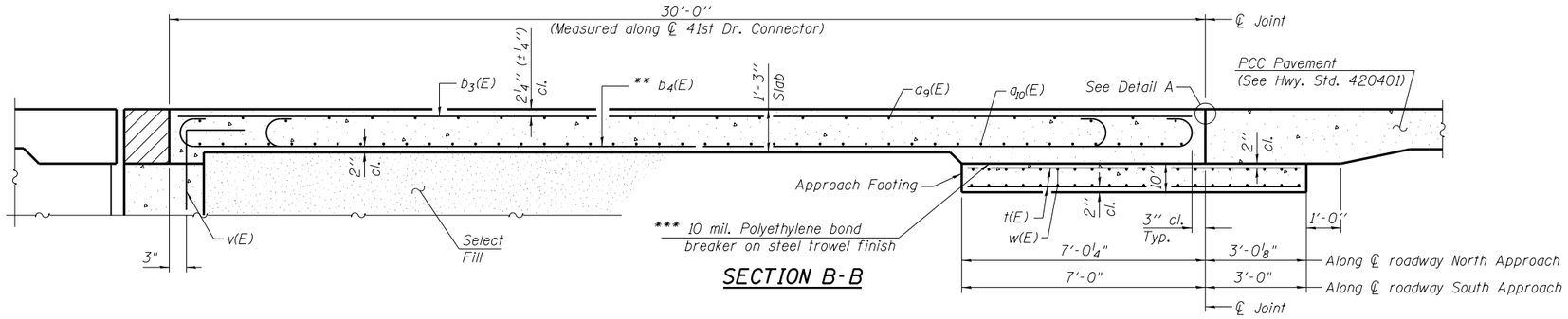

SECTION B-B

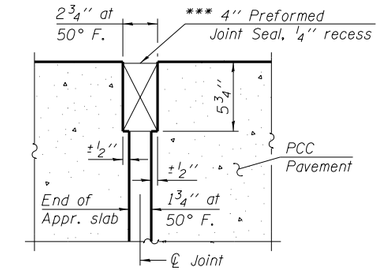

RIGID PAVEMENT

DETAIL A

MIN. BAR LAP

#4 = 2'-11"
#5 = 3'-3"

* Indicates radial dimensions
** Tilt #9 $b_4(E)$ bars as required to maintain clearance.
*** Cost included with Concrete Superstructure.

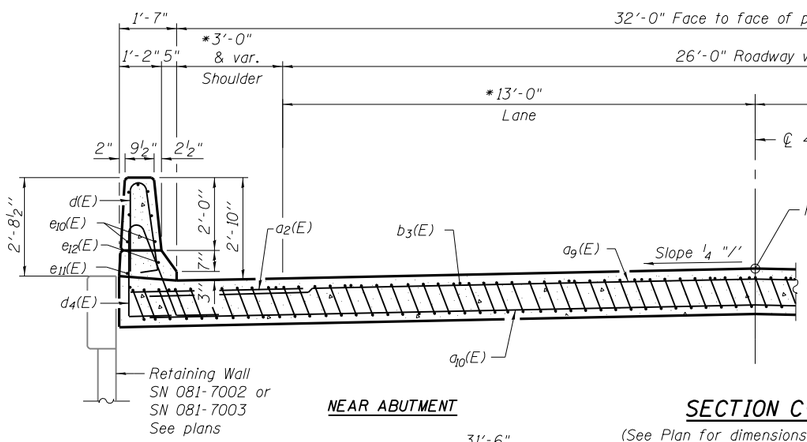

NEAR ABUTMENT

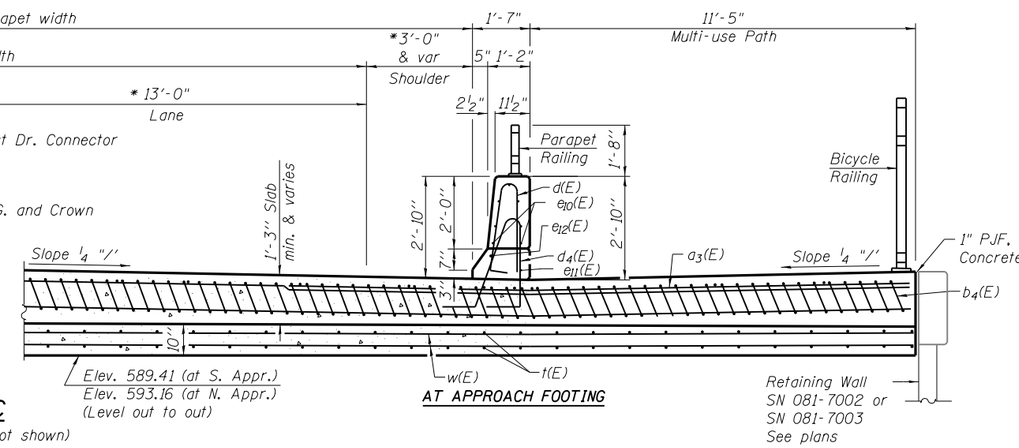

AT APPROACH FOOTING

SECTION C-C

(See Plan for dimensions not shown)

NOTES:

1. Approach slab and parapet concrete shall be paid for as Concrete Superstructure.
2. Approach footing concrete shall be paid for as Concrete Structures.
3. Reinforcement shall be paid for as Reinforcement Bars, Epoxy Coated.
4. For v(E) bar details, see sheet S-20.
5. The approach footing maximum applied service bearing pressure (Qmax) = 2.0 ksf.
6. For additional parapet details, see sheet S-8.
7. For details of Bicycle Railing and Parapet Railing, see sheet S-12.

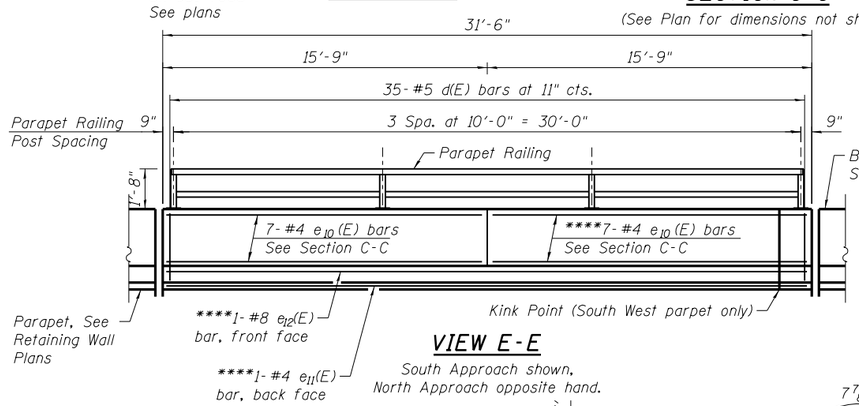

VIEW E-E

South Approach shown.
North Approach opposite hand.

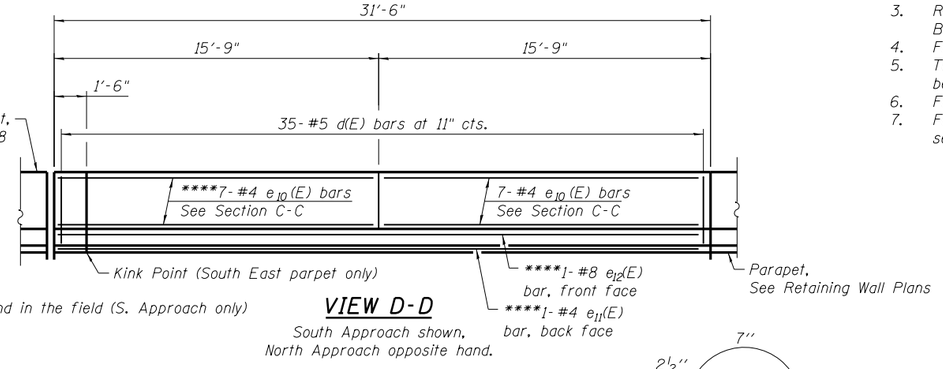

**** Bend in the field (S. Approach only)

VIEW D-D

South Approach shown.
North Approach opposite hand.

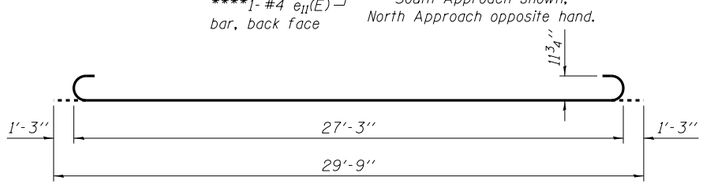

BAR $b_4(E)$

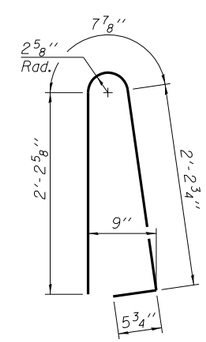

BAR d(E)

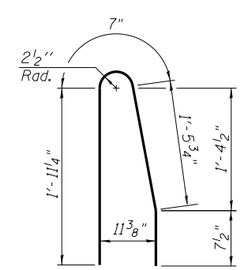

BAR $d_3(E)$

$d_3(E)$ bar is not included in the Bill of Materials.

This bar substitutes $d_4(E)$ bar in the west parapet if the alternate shown on sheet S-8 is used.

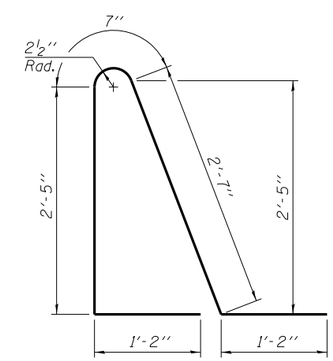

BAR $d_4(E)$

TWO APPROACHES BILL OF MATERIAL

Bar	No.	Size	Length	Shape
$a_2(E)$	48	# 6	6'-6"	
$a_3(E)$	48	# 6	14'-6"	
$a_9(E)$	100	# 4	24'-8"	
$a_{10}(E)$	184	# 5	24'-10"	
$b_3(E)$	76	# 4	29'-8"	
$b_4(E)$	224	# 9	29'-9"	
d(E)	140	# 5	5'-7"	
$d_4(E)$	140	# 5	7'-11"	
$e_{10}(E)$	56	# 4	15'-5"	
$e_{11}(E)$	4	# 4	31'-2"	
$e_{12}(E)$	4	# 8	31'-2"	
t(E)	192	# 4	9'-8"	
w(E)	160	# 5	24'-11"	
Concrete Superstructure			Cu. Yd.	156.2
Concrete Structures			Cu. Yd.	28.9
Reinforcement Bars, Epoxy Coated			Pound	40,460

Clorba Group, Inc.
CONSULTING ENGINEERS
5507 North Cumberland Avenue
Suite 402 Chicago, Illinois 60656
Tel 773.775.4200
Fax 773.775.4202
Email chicago@clorba.com

USER NAME = mteng	DESIGNED - MHT	REVISED -	
	CHECKED - SMY	REVISED -	
PLOT SCALE = 0:2.0000 ':' / in.	DRAWN - RD	REVISED -	
PLOT DATE = 3/11/2013	CHECKED - BWS	REVISED -	

STATE OF ILLINOIS
DEPARTMENT OF TRANSPORTATION

BRIDGE APPROACH SLAB DETAILS – 2
STRUCTURE NO. 081–0176

SHEET NO. S-11 OF S-27 SHEETS

F.A.P. RTE.	SECTION	COUNTY	TOTAL SHEETS	SHEET NO.
595	(142-1)R & 142-1HB	ROCK ISLAND	507	310
		CONTRACT NO. 64B84		
		ILLINOIS FED. AID PROJECT		

N:\PROJ\0003393.00\CONTRACT.1\Design\Structural\CAD\081-0176-D264B84-11-Bridge Approach Slab Details 2.dgn