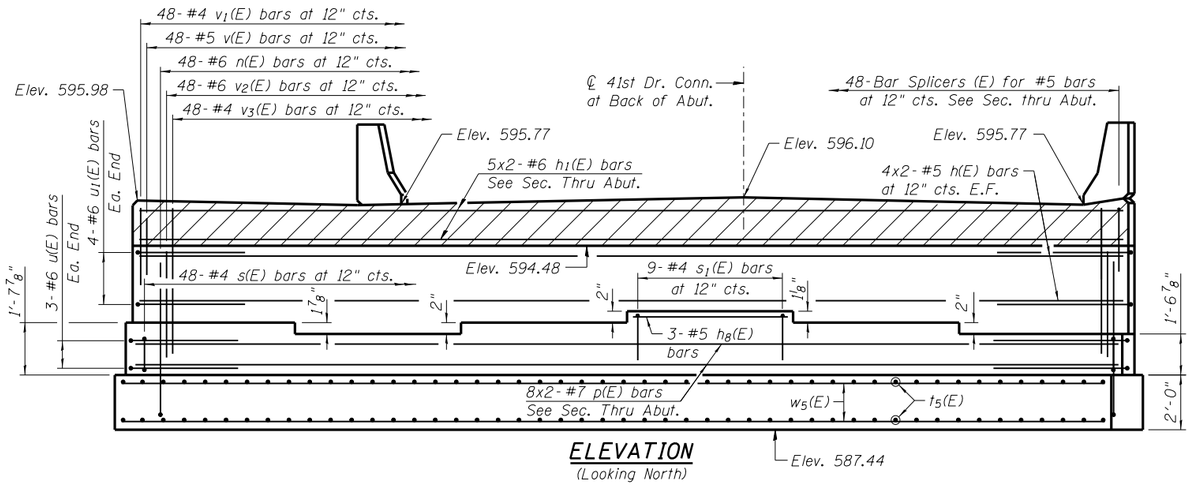


## ELEVATION
(Looking North)

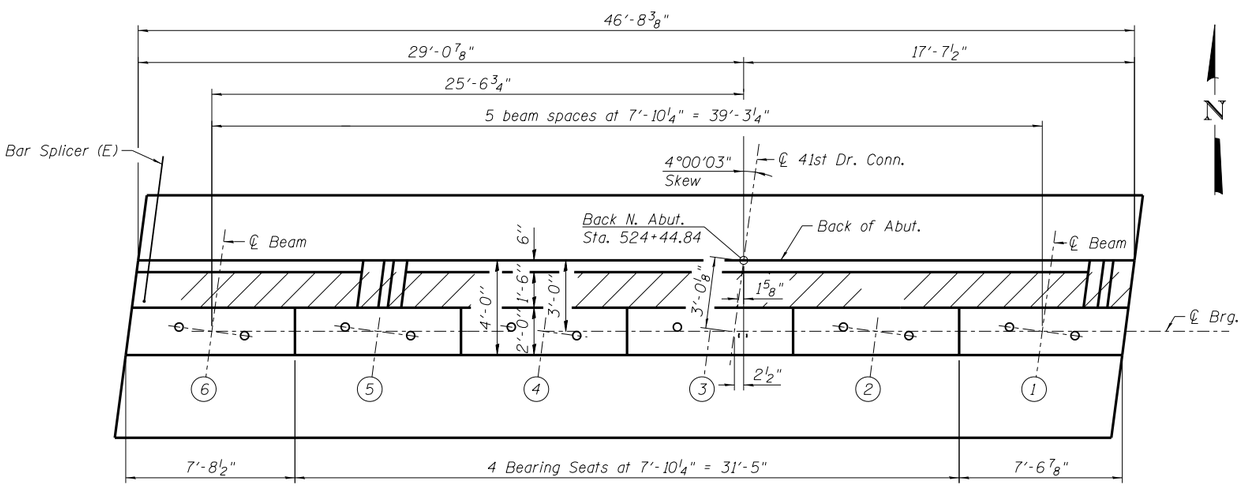


## TOP VIEW

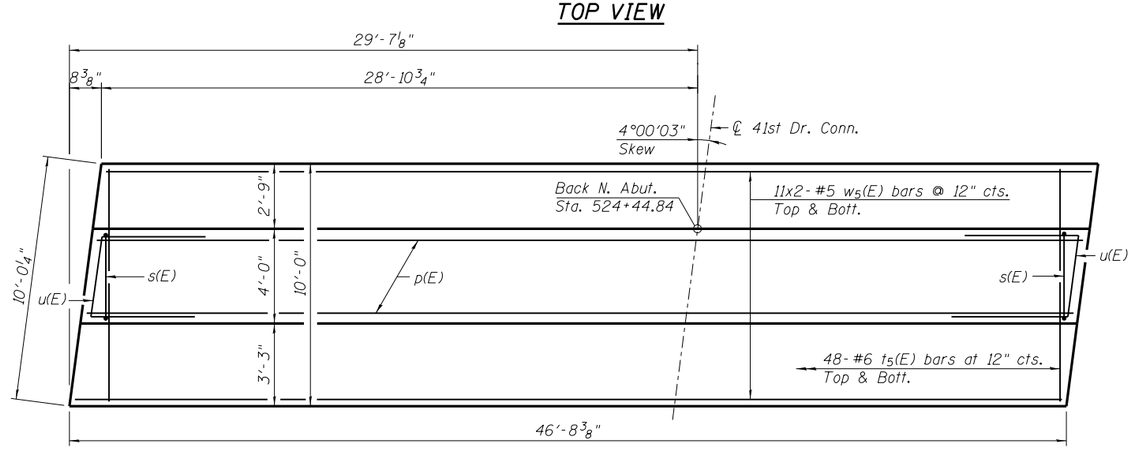


## PLAN-BEARING SEAT & FOOTING

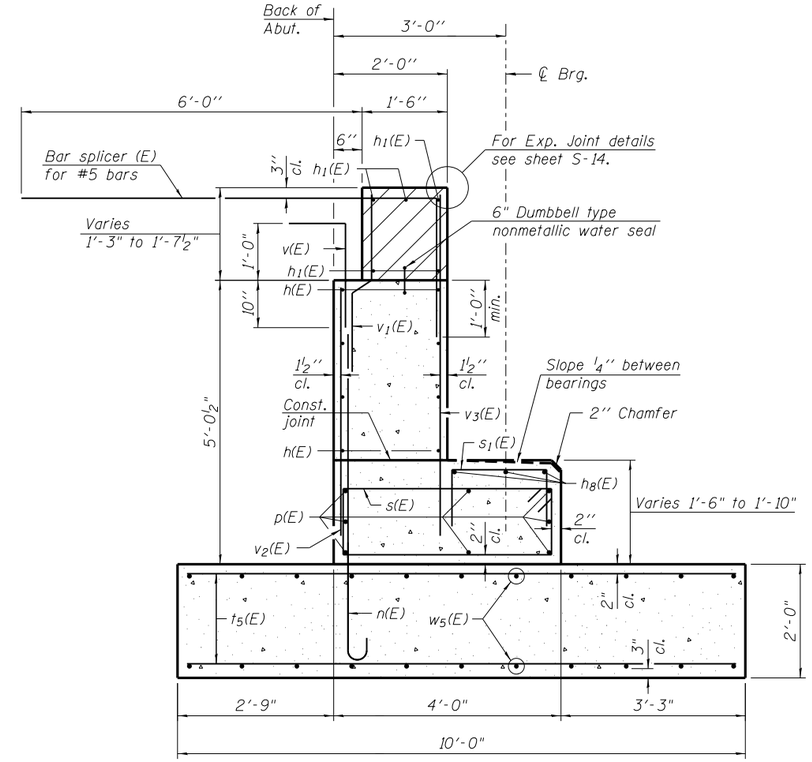


## SEC. THRU ABUT.
Maximum Applied Service Bearing Pressure: Qmax = 2,420 psf

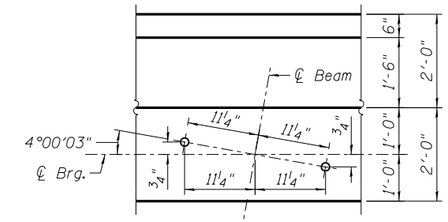


## ANCHOR BOLT LOCATION DETAIL

## ABUTMENT BEARING SEAT ELEVATION

| ① | ② | ③ | ④ | ⑤ | ⑥ |
|---|---|---|---|---|---|
| 591.01 | 591.18 | 591.27 | 591.10 | 590.94 | 591.09 |

## MIN. BAR LAP
#5 = 3'-8"
#6 = 4'-5"
#7 = 5'-10"

## NOTES:
1. Pour steps monolithically with bearing seat.
2. For details of Bar Splicers, see sheet S-23.
3. Bars indicated 4x2-#6 etc. indicates 4 lines of bars with 2 lengths per line.
4. Hatched area to be poured after superstructure false work has been removed. Quantity of concrete included with Concrete Superstructure.
5. Space reinforcement in bearing seat to miss anchor bolts.
6. Concrete Sealer to be applied to all exposed surfaces of backwall, bearing seats, front face of bearing seats and footing.
7. For bar bending details and Bill of Material, see Sheet S-20.


Clorba Group, Inc.
CONSULTING ENGINEERS
5507 North Cumberland Avenue
Suite 402 Chicago, Illinois 60656
Tel 773.775.4200
Fax 773.775.4204
Email chicago@clorba.com


| | | | |
|---|---|---|---|
| USER NAME = mtang | DESIGNED - SMY | REVISED - | |
| | CHECKED - APD | REVISED - | |
| PLOT SCALE = 0:2.00 ':' / in. | DRAWN - SMY | REVISED - | |
| PLOT DATE = 3/11/2013 | CHECKED - APD | REVISED - | |

**STATE OF ILLINOIS**
**DEPARTMENT OF TRANSPORTATION**

**NORTH ABUTMENT**
**STRUCTURE NO. 081-0176**

SHEET NO. S-20 OF S-27 SHEETS

| F.A.P. RTE. | SECTION | COUNTY | TOTAL SHEETS | SHEET NO. |
|---|---|---|---|---|
| 595 | (142-1)R & 142-1HB | ROCK ISLAND | 507 | 319 |
| | | CONTRACT NO. 64B84 | | |
| | | ILLINOIS FED. AID PROJECT | | |

N:\PROJ\0003393.00\CONTRACT.1\Design\Structural\CAD\081-0176-D264B84-20-North Abutment.dgn