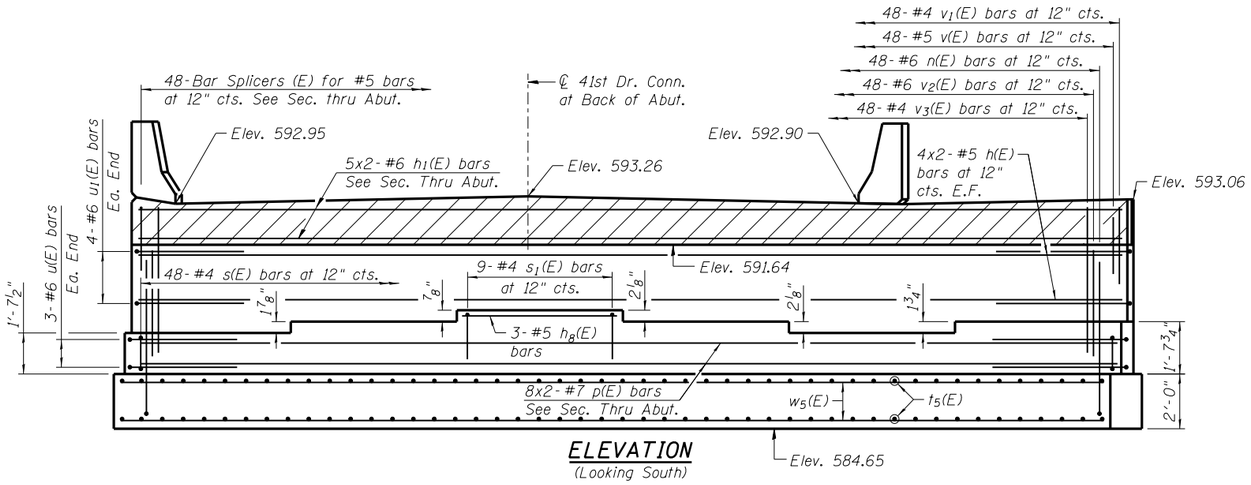

ELEVATION
(Looking South)

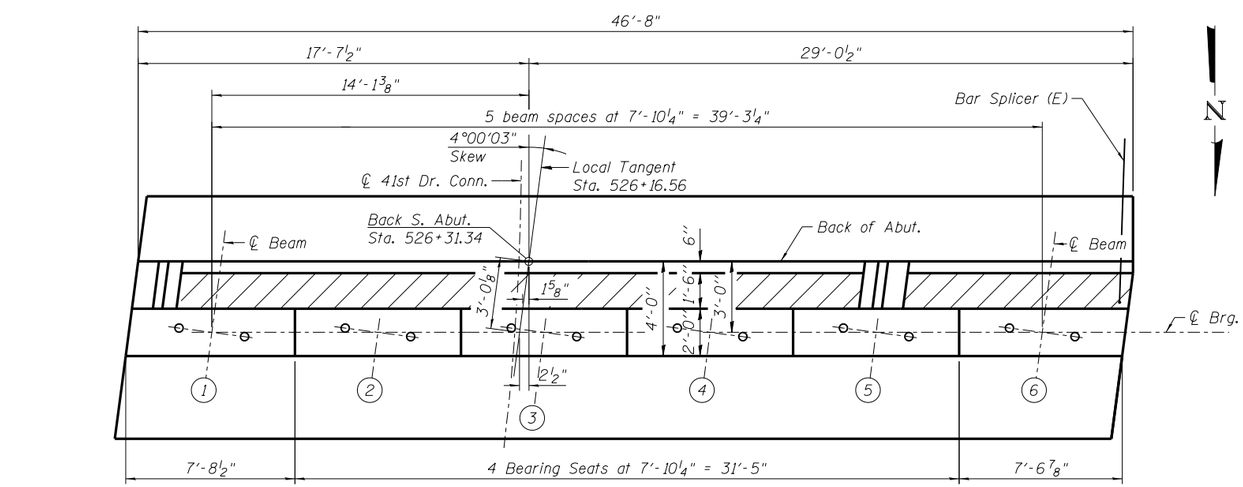

TOP VIEW

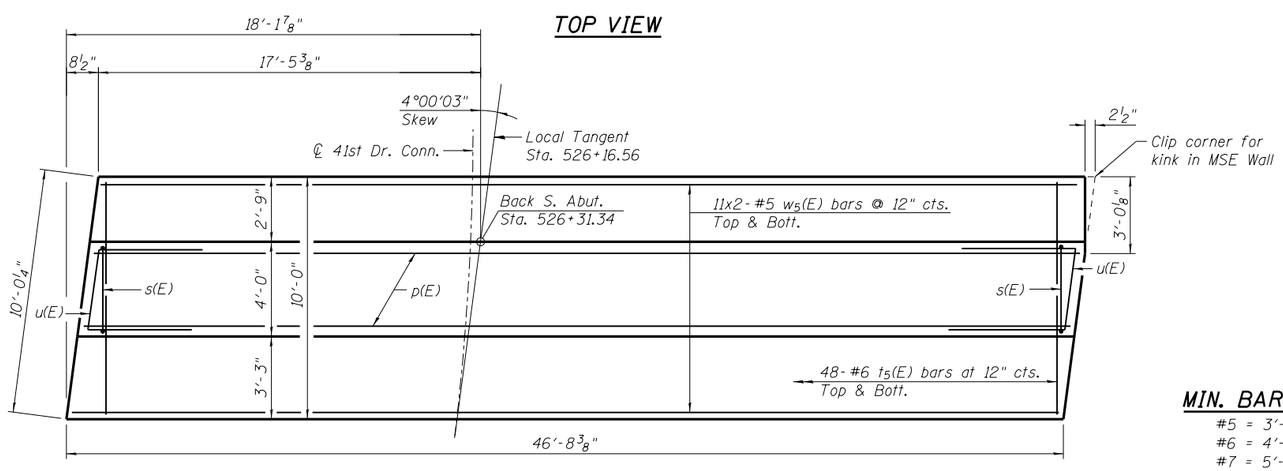

PLAN-BEARING SEAT & FOOTING

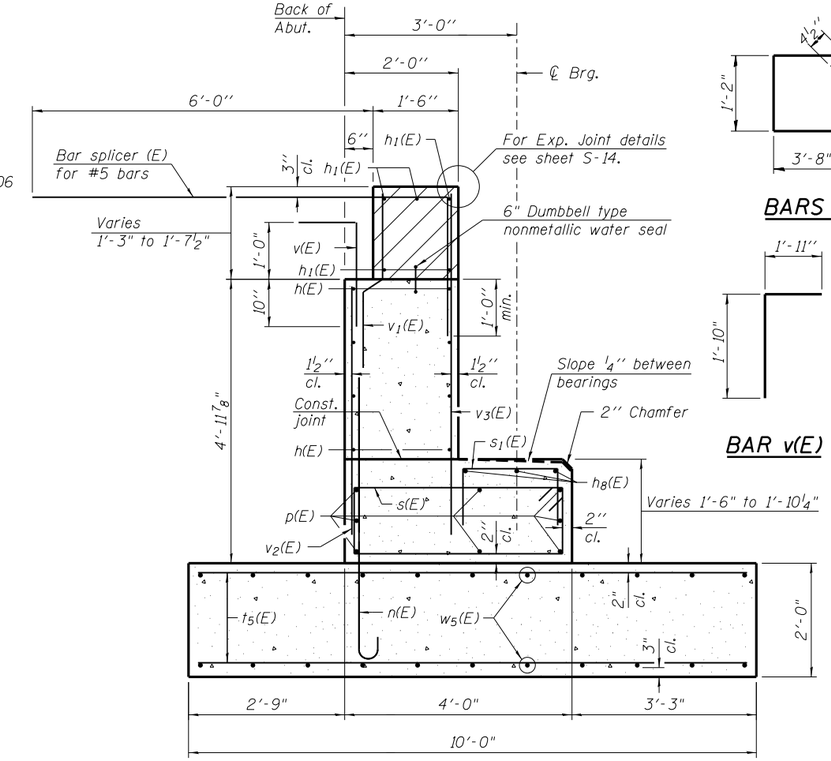

SEC. THRU ABUT.

Maximum Applied Service Bearing Pressure: Qmax = 2,420 psf

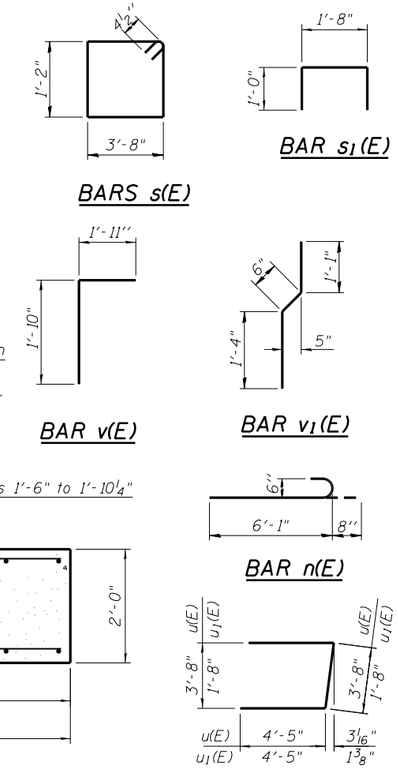

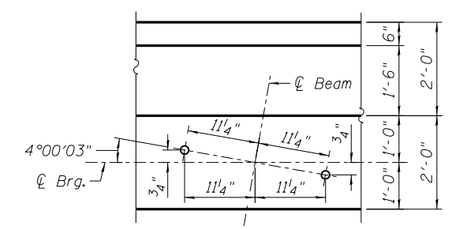

ANCHOR BOLT LOCATION DETAIL

ABUTMENT BEARING SEAT ELEVATION

①	②	③	④	⑤	⑥
588.28	588.43	588.50	588.33	588.15	588.30

MIN. BAR LAP

#5 = 3'-8"
#6 = 4'-5"
#7 = 5'-10"

NOTES:

1. Pour steps monolithically with bearing seat.
2. For details of Bar Splicers, see sheet S-23.
3. Bars indicated 4x2-#6 etc. indicates 4 lines of bars with 2 lengths per line.
4. Hatched area to be poured after superstructure false work has been removed. Quantity of concrete included with Concrete Superstructure.
5. Space reinforcement in bearing seat to miss anchor bolts.
6. Concrete Sealer to be applied to all exposed surfaces of backwall, bearing seats, front face of bearing seats and footing.

ABUTMENT BILL OF MATERIAL
(for both Abutments)

Bar	No.	Size	Length	Shape
h(E)	32	# 5	25'-1"	
h1(E)	20	# 6	25'-1"	
h8(E)	6	# 5	7'-6"	
n(E)	96	# 6	6'-9"	
p(E)	32	# 7	26'-2"	
s(E)	96	# 4	10'-5"	
s1(E)	18	# 4	3'-8"	
t5(E)	192	# 6	9'-8"	
u(E)	12	# 6	12'-6"	
u1(E)	16	# 6	10'-6"	
v(E)	96	# 5	3'-9"	
v1(E)	96	# 4	2'-11"	
v2(E)	96	# 6	4'-5"	
v3(E)	96	# 4	5'-8"	
w5(E)	88	# 5	25'-1"	
Concrete Structures			Cu. Yd.	115.5
Reinforcement Bars, Epoxy Coated			Pound	12,170
Concrete Sealer			Sq. Ft.	1,143

N:\PROJ\0003393.00\CONTRACT_1\Design\Structural\CAD\081-0176-D264B4-21-South Abutment.dgn

Clorba Group, Inc.
CONSULTING ENGINEERS
5507 North Cumberland Avenue
Suite 402 Chicago, Illinois 60656
Tel: 773.775.4059
Fax: 773.775.4314
Email: clrdesign@clorba.com

USER NAME = mteng	DESIGNED - SMY	REVISED -	
	CHECKED - APD	REVISED -	
PLOT SCALE = 0:2.00 ':' / in.	DRAWN - SMY	REVISED -	
PLOT DATE = 3/11/2013	CHECKED - APD	REVISED -	

STATE OF ILLINOIS
DEPARTMENT OF TRANSPORTATION

SOUTH ABUTMENT
STRUCTURE NO. 081-0176

SHEET NO. S-21 OF S-27 SHEETS

F.A.P. RTE.	SECTION	COUNTY	TOTAL SHEETS	SHEET NO.
595	(142-1)R & 142-1HB	ROCK ISLAND	507	320

CONTRACT NO. 64B84

ILLINOIS FED. AID PROJECT