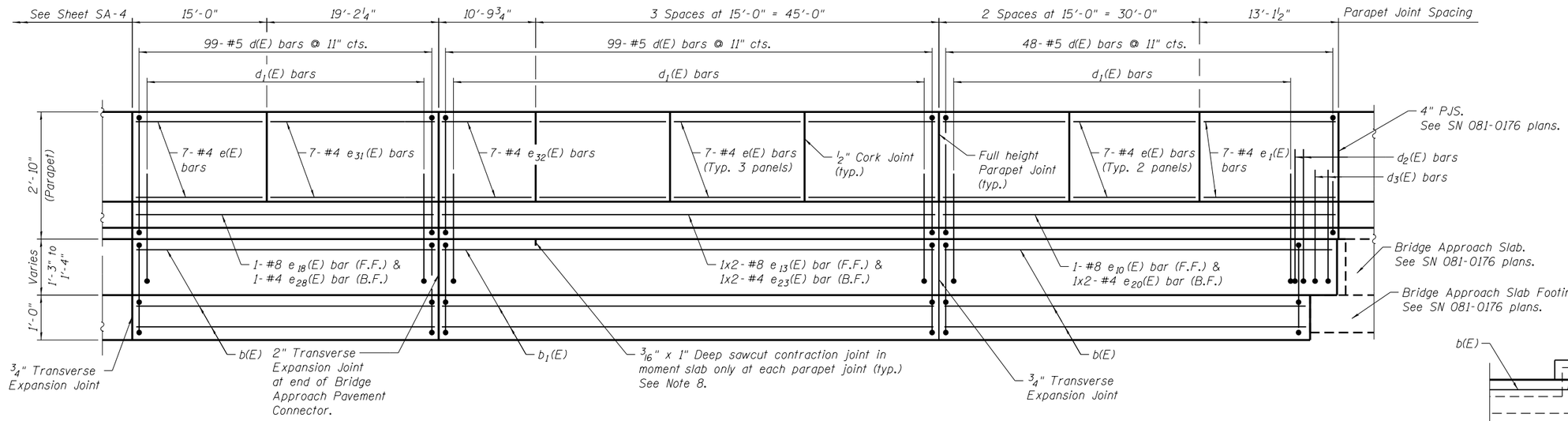

ELEVATION

(Looking East)

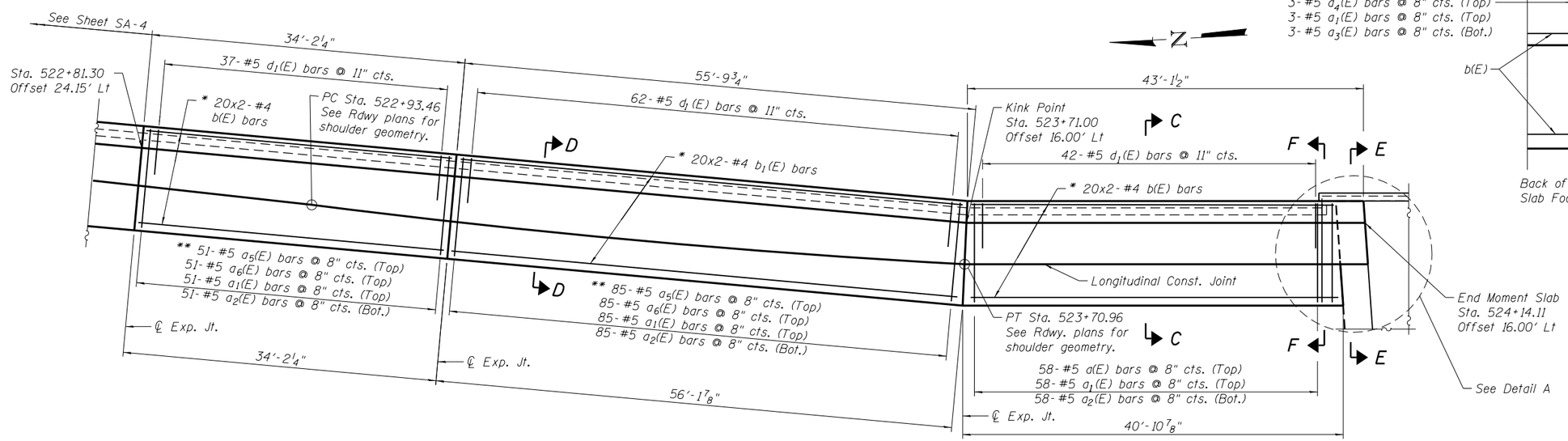

PLAN

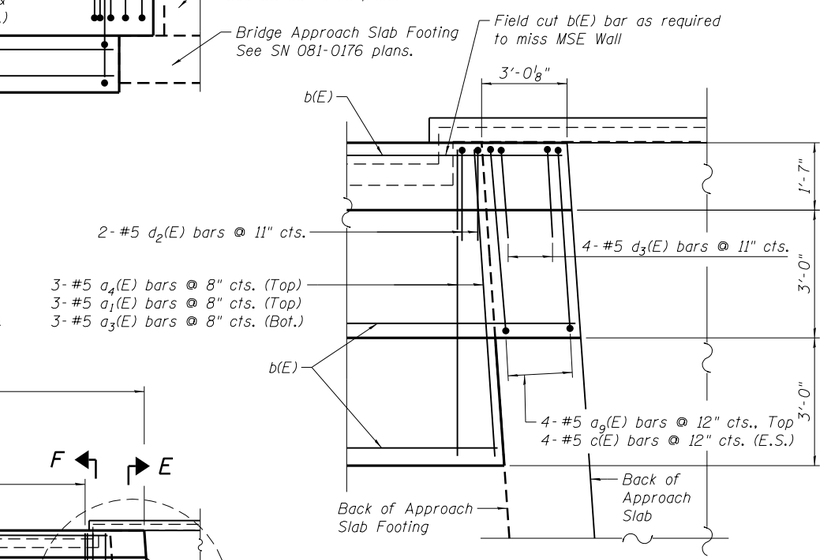

DETAIL A

* See cross section for placement.

** Field cut to fit as required.

MIN. BAR LAP

#4 bar = 2'-11"
#8 bar = 6'-9"

NOTES:

1. Bars indicated thus 7x2-#5 etc. indicates 7 lines of bars with 2 lengths per line.
2. E.S. = Each Side, F.F. = Front Face, B.F. = Back Face, E.S. = Each Side.
3. Offsets are to front face of parapet.
4. For sections C-C, D-D, E-E & F-F, see Sheet SA-9.
5. For Bar Bending Diagrams and Bill of Materials, see Sheet SA-11.
6. For Parapet Joint details, see Sheet SA-9.
7. Bend $b_1(E)$ bars in field to match curve.
8. For Transverse Contraction Joint details, see Sheet SA-10.
9. For Expansion Joint details, see Sheet SA-9.

N:\PROJ\00003393.00\CONTRACT.1\Design\Structural\CAD\Retaining Wall 081-7002\081-7002_05_East_Moment_Slab_2.dgn

Clorba Group, Inc.
CONSULTING ENGINEERS
5507 North Cumberland Avenue
Suite 1-Chicago, Illinois 60656
Tel. 773.775.4000
Fax 773.775.4014
Email chicago@clorba.com

USER NAME = mteng	DESIGNED - APD	REVISED -	
	CHECKED - BWS	REVISED -	
PLOT SCALE = 13:4 ':' / in.	DRAWN - RD	REVISED -	
PLOT DATE = 3/11/2013	CHECKED - BWS	REVISED -	

STATE OF ILLINOIS
DEPARTMENT OF TRANSPORTATION

EAST MOMENT SLAB PLAN & ELEVATION (2 OF 2)
STRUCTURE NO. 081-7002

SHEET NO. SA-5 OF SA-16 SHEETS

F.A.P. RTE.	SECTION	COUNTY	TOTAL SHEETS	SHEET NO.
595	(142-1)R-1 AND 142-1HB	ROCK ISLAND	507	331
		CONTRACT NO. 64B84		
	ILLINOIS	FED. AID PROJECT		