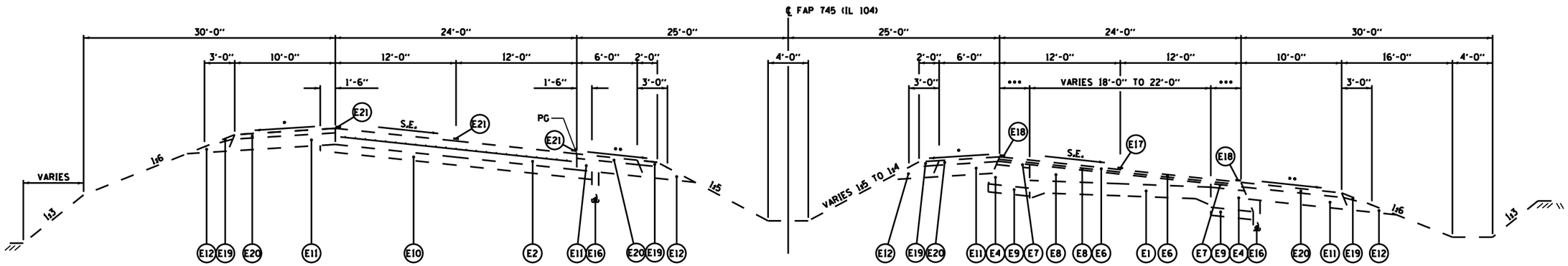

S.E. NOTES:
- • 4% OR 7% BREAKOVER WHICHEVER IS LESS.
- •• 4% OR SE WHICHEVER IS GREATER.

TYPICAL FAP 745 (IL 104) SECTION #9

STA 295+37.00 TO STA 297+50.00 (S.E. TRANSITION)
STA 297+50.00 TO STA 305+81.00 (S.E. = 4.40%)
STA 305+81.00 TO STA 307+94.00 (S.E. TRANSITION)

LEGEND

- E1 EXISTING PCC PAVEMENT (9"-6"-9") W/ HOT-MIX ASPHALT OVERLAY, 4½"±
- E2 EXISTING CONTINUOUSLY REINFORCED PCC PAVEMENT, 8"
- E3 EXISTING HOT-MIX ASPHALT BASE COURSE, 10"
- E4 EXISTING HOT-MIX ASPHALT BASE COURSE WIDENING, 10"
- E5 EXISTING HOT-MIX ASPHALT BASE COURSE, 8"
- E6 EXISTING POLYMERIZED HOT-MIX ASPHALT SURFACE COURSE, MIX "D", N70, 1½"
- E7 EXISTING HOT-MIX ASPHALT BINDER COURSE, 2½" AND VARIES
- E8 EXISTING LEVELING BINDER (MACHINE METHOD), N70, ¾"
- E9 EXISTING SUB-BASE GRANULAR MATERIAL, 4" AND VARIES
- E10 EXISTING STABILIZED SUB-BASE, 4"
- E11 EXISTING HOT-MIX ASPHALT SHOULDERS, 5¾"
- E12 EXISTING AGGREGATE SHOULDERS, 8"
- E13 EXISTING CONCRETE MEDIAN SURFACE, 4"
- E14 EXISTING SAND FILL
- E15 EXISTING CURB AND GUTTER TYPE B-6.24
- E16 EXISTING PIPE UNDERDRAIN, 4"
- E17 EXISTING PREFORMED PLASTIC PAVEMENT MARKING, TYPE B-INLAID-5"
- E18 EXISTING URETHANE PAVEMENT MARKING
- E19 EXISTING AGGREGATE SHOULDER, TYPE B (WEDGE)
- E20 EXISTING HOT-MIX ASPHALT SHOULDER, 2¼" & VARIES (RUMBLE STRIPS CONSTRUCTED PER STANDARD 642001)
- E21 EXISTING PAINT PAVEMENT MARKING

NOTES:
1.) DATA TAKEN FROM ARCHIVE PLANS

FILE NAME =	USER NAME = $USER$	DESIGNED -	REVISED -	STATE OF ILLINOIS DEPARTMENT OF TRANSPORTATION	TYPICAL SECTIONS	F.A.P RTE.	SECTION	COUNTY	TOTAL SHEETS	SHEET NO.
$FILEL$		DRAWN - DMS	REVISED -			745	(103)1-3, (104)1-2	ADAMS	10	10
	PLOT SCALE = $SCALE$	CHECKED -	REVISED -					CONTRACT NO. 72G36		
$MODELNAME$	PLOT DATE = $DATE$	DATE - 5/8/2013	REVISED -		SCALE: SHEET 5 OF 5 SHEETS STA. TO STA.		ILLINOIS FED. AID PROJECT			