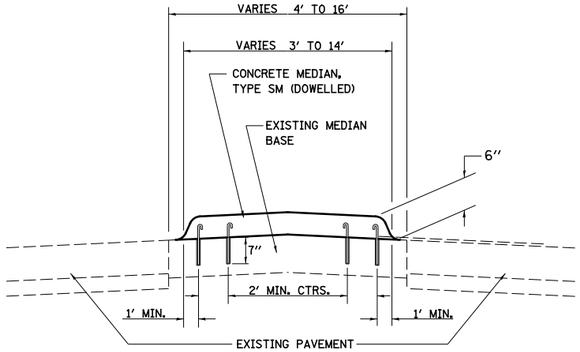

SECTION A-A

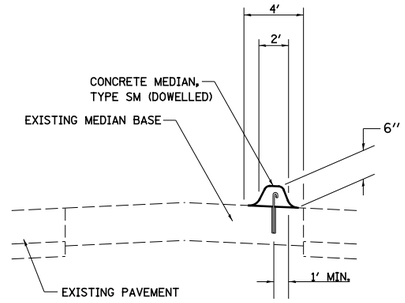

SECTION B-B

GROUND COORDINATES FOR ISLAND RADII

DESCRIPTION	COORDINATES	
	NORTHING	EASTING
CC R1	903251.80	927657.37
CC R2	903269.17	927662.43
CC R3	903253.74	927675.19

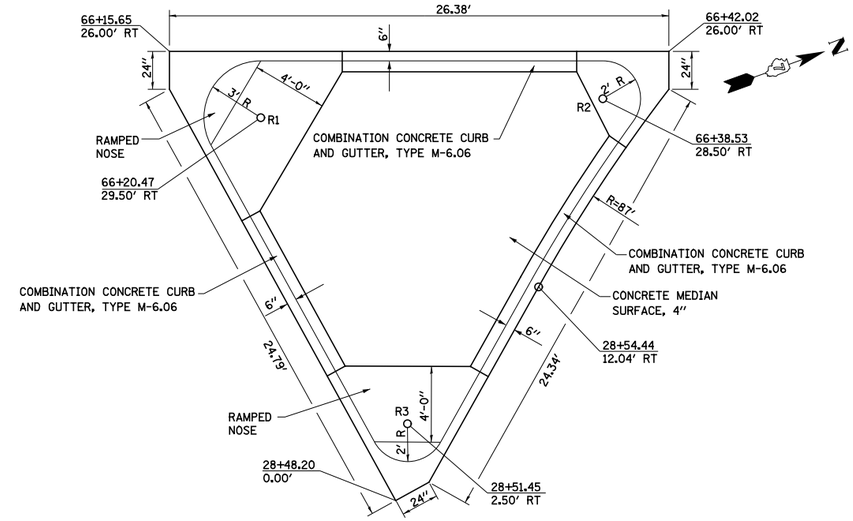

ISLAND DETAIL

NOTE:
ISLAND RADII ARE TO FACE OF CURB

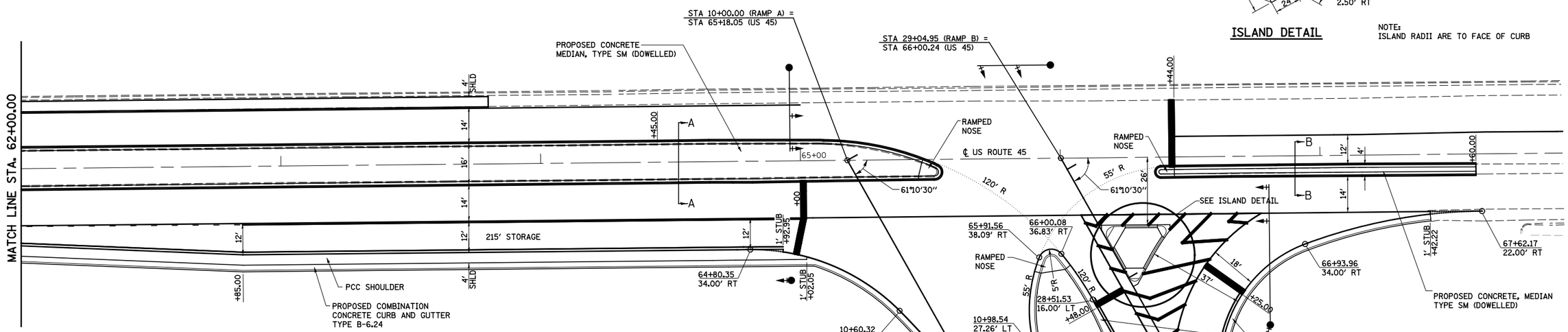

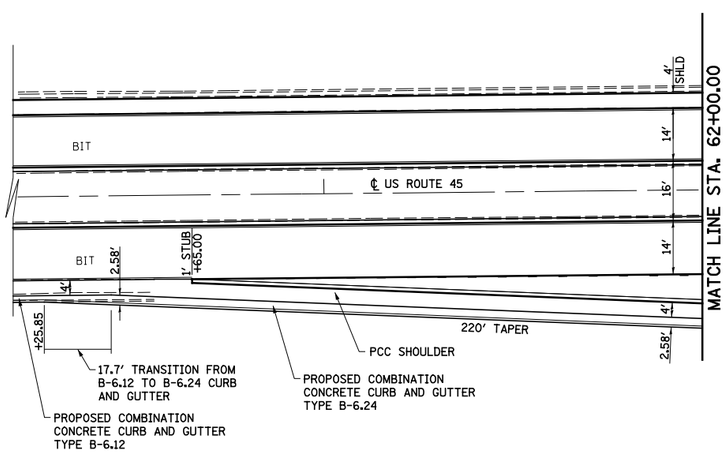

FILE NAME = S:\Projects\403-00072.57-70\dgn\N TrlLv\rampdetails.dgn	USER NAME = $USER$	DESIGNED - JWS	REVISED -
		DRAWN - PDB	REVISED -
	PLOT SCALE = $SCALE$	CHECKED - BRM	REVISED -
	PLOT DATE = $DATE$	DATE - 7-11-08	REVISED -

STATE OF ILLINOIS
DEPARTMENT OF TRANSPORTATION

INTERSECTION RAMP TERMINAL DETAILS, RAMPS A & B, US ROUTE 45

SCALE: 1"=20' | SHEET NO. 1 OF 2 SHEETS | STA. TO STA.

F.A.I RTE.	SECTION	COUNTY	TOTAL SHEETS	SHEET NO.
57/70	(25-4)R	EFFINGHAM	1760	303
		CONTRACT NO. 74295		
FED. ROAD DIST. NO.	ILLINOIS	FED. AID PROJECT		