STRUCTURE NO. 064-0035

SECTION BSMART 2013-1

ROUTE F.A.I. 24

STATION

CONTRACT NO. 78293

MASSAC COUNTY

Bad Copy

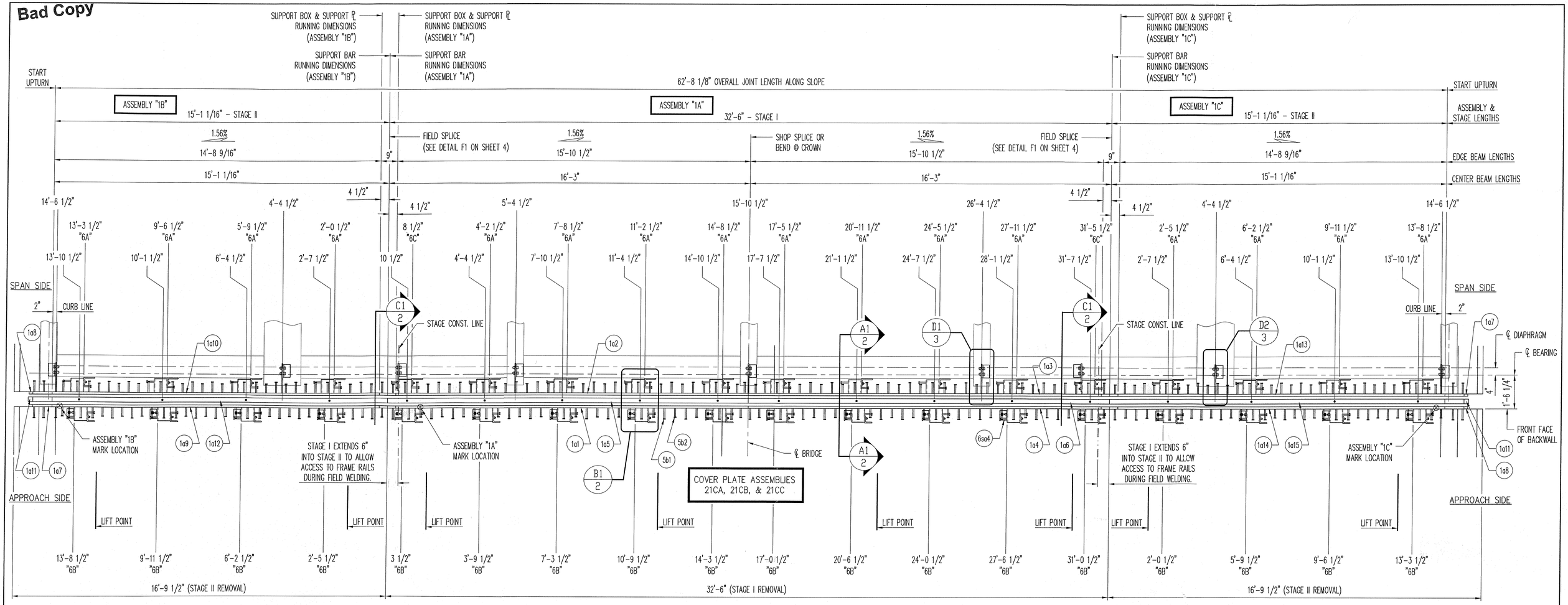

COVER PLATE ASSEMBLIES 17CA & 17CB

COVER PLATE ASSEMBLIES 19CA & 19CB

N

"D-160" MODULAR EXPANSION JOINT PLAN VIEW

I-24 OVER THE OHIO RIVER
STRUCTURE NO. 064-0035
LOCATED AT CELL A
BOX SPACING = 2'-9", 3'-6", & 3'-9"
(1) JOINT REQUIRED
- LOOKING SOUTH -

APPROVED
For Main Dimensions and Materials Only
AUG 27 2013
Engineer of Bridge & Traffic Structures

File Copy

SHOP NOTES:

- SEE INSTALLATION PROCEDURES ON SHEET 3
- SEE UPTURN DETAILS ON SHEET 4
- SEE SPLICE DETAILS ON SHEET 4
- SEE GENERAL NOTES ON SHEET 5
- SEE STUD LAYOUT SEQUENCE ALONG EDGE BEAM ON SHEET 5
- SEE SUPPORT BOX DETAILS ON SHEET 6
- SEE SUPPORT BAR DETAILS ON SHEET 7
- SEE TEMPERATURE ADJUSTMENT DETAILS ON SHEETS 2 & 8
- SEE SPRING ACCESS PLATE DETAIL ON SHEET 8
- COVER PLATES NOT SHOWN FOR CLARITY PURPOSES (SEE COVER PLATE DETAILS ON SHEETS 17 THRU 28)
- SEE BILL OF MATERIALS ON SHEET 29

FABRICATION NOTE:

- SHOP SHALL LOCATE SPLICES IN EDGE & CENTER BEAMS. MINIMUM SPLICE LENGTH SHALL BE 2'-0" FOR EDGE BEAMS & 4'-0" FOR CENTER BEAMS.

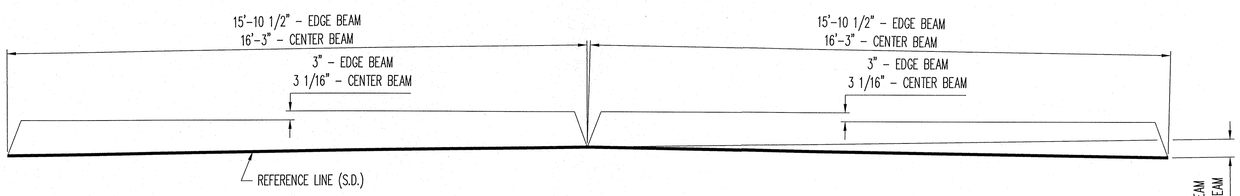

ASSEMBLY "1A" ELEVATION SCHEMATIC

ALL DIMENSIONS TO TOP OF RAILS
S.D. = SHOP DIMENSION
N.T.S.

REV.	DESCRIPTION	DATE	DET.	CKD.

D.S. BROWN
A GIBRALTAR INDUSTRIES COMPANY
THE D.S. BROWN COMPANY
300 E. CHERRY STREET
NORTH BALTIMORE, OHIO 45872
419.257.3561
FAX: 419.257.0332
WWW.DSBROWN.COM

	ITEM	QUANTITY
LOCATION — I-24 OVER THE OHIO RIVER	-	-
STRUCTURE NO. — 064-0035	-	-
ROUTE — FAI ROUTE 24 (I-24)	-	-
SECTION — BSMART 2013-1	-	-
CONTRACT NO. — 78293 DISTRICT NO. — 9	-	-
P.O. NO. — 7838	-	-
DESIGNER — ILLINOIS DEPARTMENT OF TRANSPORTATION	-	-
CUSTOMER — HENNEGAN & ASSOCIATES (JOB NO. 06-0113)	-	-

DESCRIPTION: "D-160" PLAN VIEW
MASSAC COUNTY, ILLINOIS

SCALE:	DRAWN BY:	CHECKED BY:	DATE:	BRIDGE SHEET:
N.T.S.	RES	TKE	6/13/13	1 OF 31

PROJECT NUMBER	PRODUCT CODE	RELEASE	SHEET
40606	1021	1	1

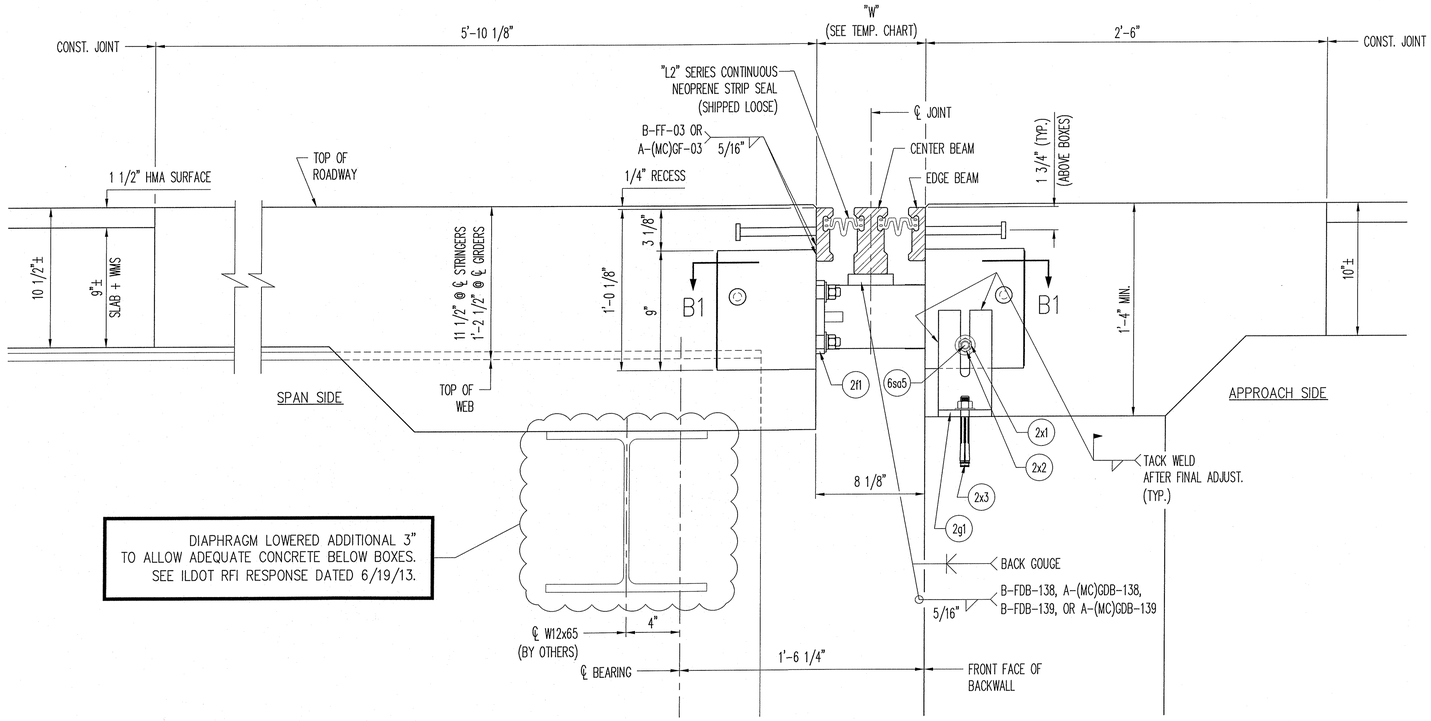

SECTION A1

DIMENSIONS SHOWN ARE AT MID. TEMP. (50°F)

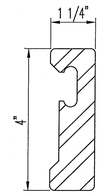

EDGE BEAM DETAIL

AASHTO M270 GRADE 50 (ASTM-A572) OR GRADE 50W (ASTM-A588) STEEL

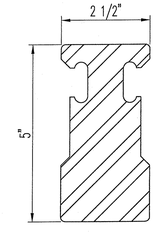

CENTER BEAM DETAIL

AASHTO M270 GRADE 50 (ASTM-A572) OR GRADE 50W (ASTM-A588) STEEL

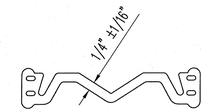

"L2" SERIES STRIP SEAL

L2-400 SEAL
(SHIPPED LOOSE)

"D-160" OPERATING DIMENSIONS "W"	
STRUCT. TEMP.	CELL A
MAX.	5"
120°F	6 1/2"
110°F	6 3/4"
100°F	6 15/16"
90°F	7 3/16"
80°F	7 7/16"
70°F	7 11/16"
60°F	7 7/8"
50°F (MID. TEMP.)	8 1/8"
40°F	8 3/8"
30°F	8 9/16"
20°F	8 13/16"
10°F	9 1/16"
0°F	9 5/16"
-10°F	9 1/2"
-20°F	9 3/4"
-30°F	10"
MIN.	11 5/16"

TEMPERATURE ADJUSTMENT CHART

THERMAL MOVEMENT:

COEFFICIENT OF THERMAL EXPANSION x (SPAN LENGTH) (12 IN/FT) (10) = MOVEMENT/10°F

0.0000065 IN/IN/°F x (300') (12 IN/FT) (10) = 0.234"/10°F

NOTE: CONTRIBUTING SPAN LENGTH ASSUMED TO BE THE DISTANCE BETWEEN CELL A AND MIDPOINT BETWEEN PIERS 1 & 2.

SHOP NOTE: SHIP JOINT @ 8 1/8" OPENING (SHIP WITHOUT SEAL INSTALLED)

APPROVED
For Main Dimensions and Materials Only
AUG 27 2013
Engineer of Bridge & Traffic Structures

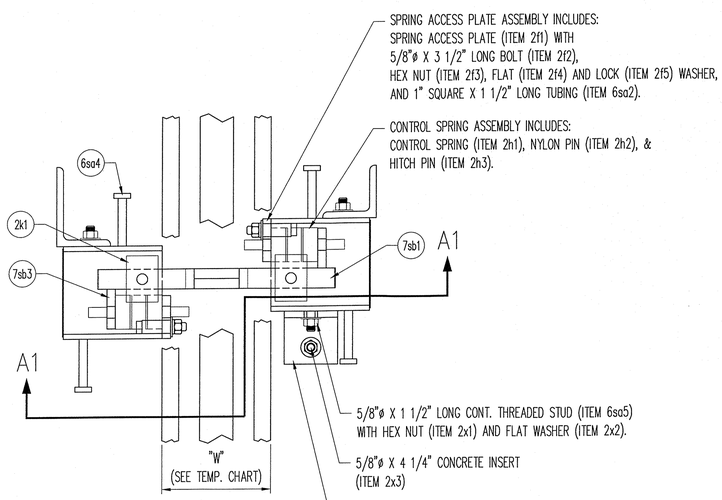

SECTION B1

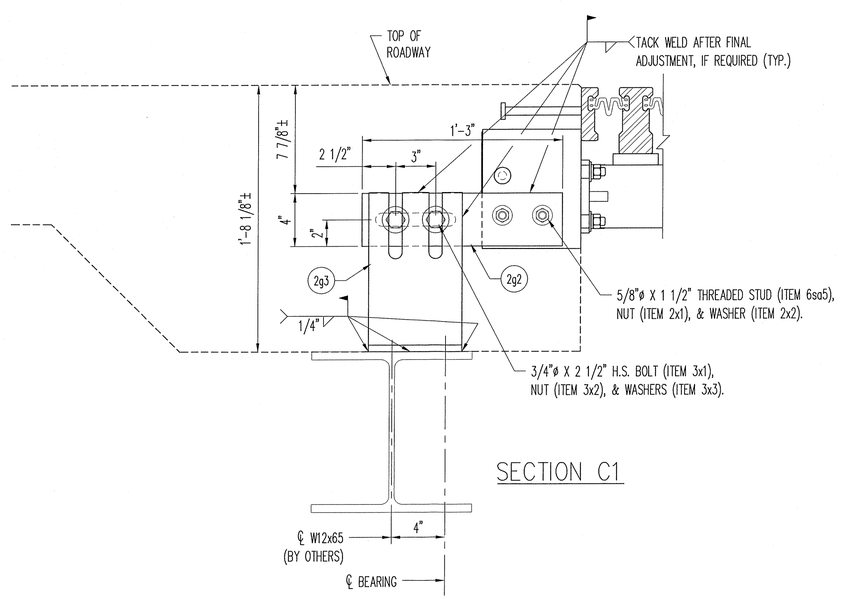

SECTION C1

REV.	DESCRIPTION	DATE	DET.	CKD.

D.S. BROWN
A GIBRALTAR INDUSTRIES COMPANY
THE D.S. BROWN COMPANY
300 E. CHERRY STREET
NORTH BALTIMORE, OHIO 45872
419.257.3561
FAX: 419.257.0332
WWW.DSBROWN.COM

LOCATION — I-24 OVER THE OHIO RIVER
STRUCTURE NO. — 064-0035
ROUTE — FAI ROUTE 24 (I-24)
SECTION — BSMART 2013-1
CONTRACT NO. — 78293 DISTRICT NO. — 9
P.O. NO. — 7838
DESIGNER — ILLINOIS DEPARTMENT OF TRANSPORTATION
CUSTOMER — HENNEGAN & ASSOCIATES (JOB NO. 06-0113)

ITEM	QUANTITY
–	–
–	–
–	–
–	–
–	–
–	–
–	–
–	–
–	–
–	–

DESCRIPTION:	SCALE:	DRAWN BY:	CHECKED BY:	DATE:	BRIDGE SHEET:
"D-160" SECTIONS & STANDARD DETAILS MASSAC COUNTY, ILLINOIS	N.T.S.	RES	TKE	6/13/13	2 OF 31
	PROJECT NUMBER	PRODUCT CODE	RELEASE	SHEET	
	40606	1021	1	2	

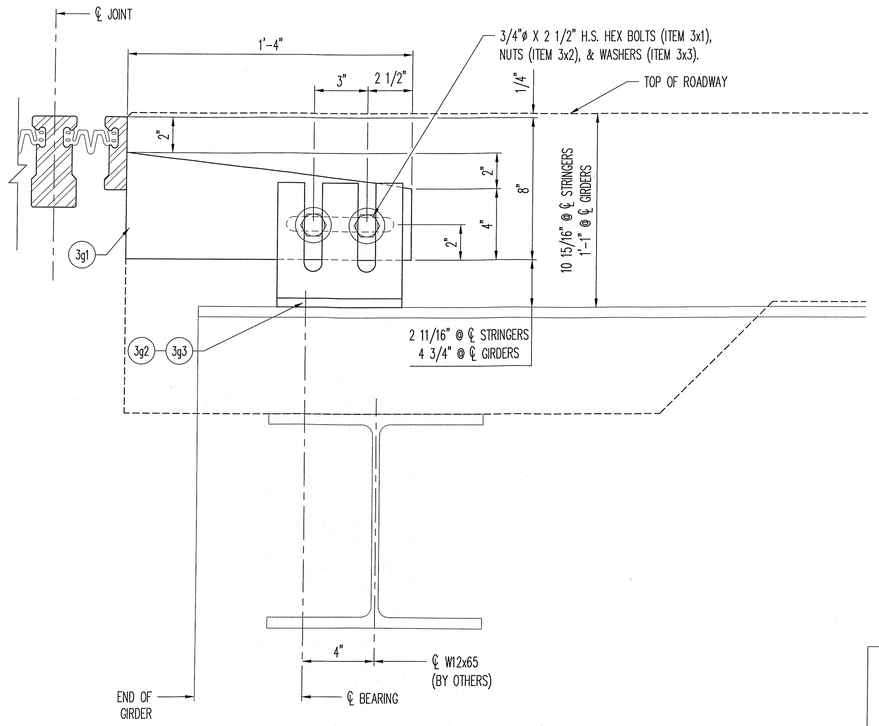

SECTION C2

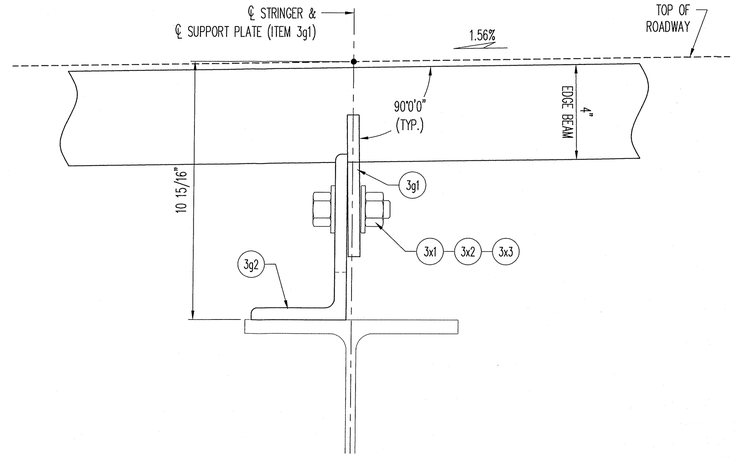

SECTION E1

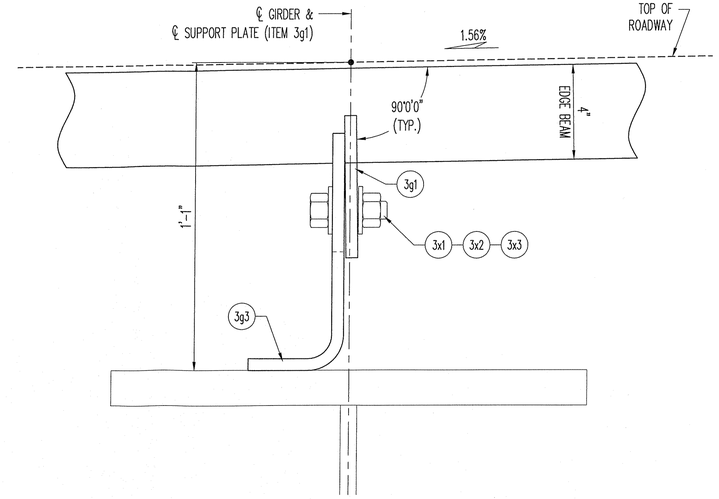

SECTION E2

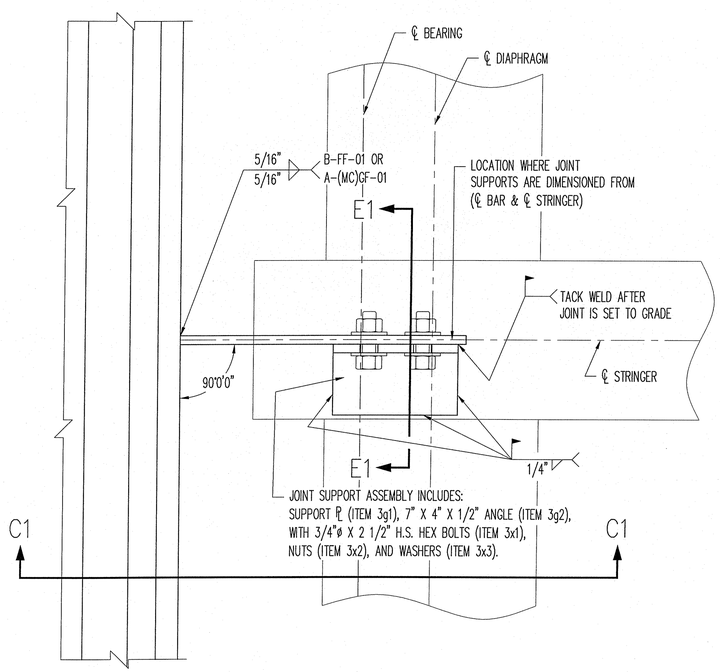

SECTION D1

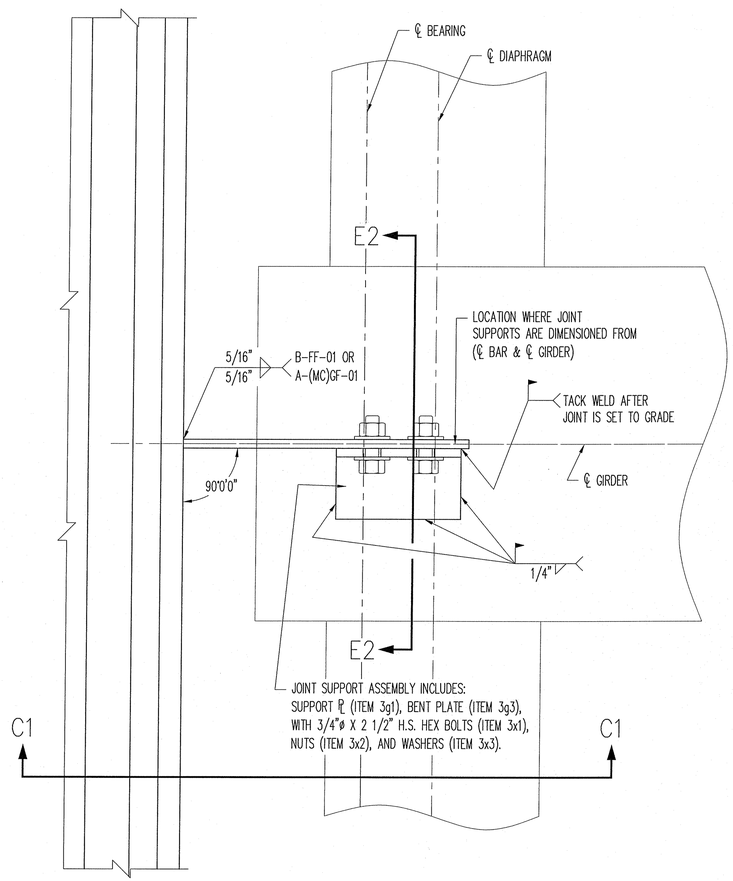

SECTION D2

INSTALLATION PROCEDURES

1) FIELD ENGINEER SHALL DETERMINE JOINT OPENING ON DAY OF INSTALLATION.

2) PLACE JOINT IN BLOCKOUT AND PROPERLY ALIGN BOTH HORIZONTALLY AND VERTICALLY USING SUPPORT PLATES AND ANGLES. (JOINT MUST FOLLOW ROADWAY GRADE)

3) BEND OR REMOVE CONFLICTING REBAR AS APPROVED BY THE ENGINEER.

4) TIGHTEN ALL EXPANSION JOINT SUPPORT CONNECTIONS. CONTRACTOR MAY TACK WELD, IF NEEDED, JOINT SUPPORT CONNECTIONS (SEE SECTIONS C1, D1 & D2 FOR LOCATIONS).

5) REMOVE TEMPERATURE ADJUSTMENT DEVICES AND LIFTING DEVICES SOON AFTER ATTACHMENT TO STRUCTURE.

6) CONTRACTOR TO PLACE FORMWORK SO THAT NO CONCRETE FLOWS INTO BOXES AND JOINT GAP OPENINGS.

7) POUR AND VIBRATE CONCRETE INTO BLOCKOUT TO ENSURE PROPER CONSOLIDATION AROUND ALL EMBEDDED COMPONENTS. REMOVE FORMWORK AFTER CURE TIME, AS DETERMINED BY FIELD ENGINEER.

APPROVED
For Main Dimensions and Materials Only
AUG 27 2013
Engineer of Bridge & Traffic Structures

REV.	DESCRIPTION	DATE	DET.	CKD.

D.S. BROWN
A GIBRALTAR INDUSTRIES COMPANY
THE D.S. BROWN COMPANY
300 E. CHERRY STREET
NORTH BALTIMORE, OHIO 45872
419.257.3561
FAX: 419.257.0332
WWW.DSBROWN.COM

	ITEM	QUANTITY
LOCATION — I-24 OVER THE OHIO RIVER	–	–
STRUCTURE NO. — 064-0035	–	–
ROUTE — FAI ROUTE 24 (I-24)	–	–
SECTION — BSMART 2013-1	–	–
CONTRACT NO. — 78293 DISTRICT NO. — 9	–	–
P.O. NO. — 7838	–	–
DESIGNER — ILLINOIS DEPARTMENT OF TRANSPORTATION	–	–
CUSTOMER — HENNEGAN & ASSOCIATES (JOB NO. 06-0113)	–	–

DESCRIPTION: "D-160" SECTIONS & STANDARD DETAILS
MASSAC COUNTY, ILLINOIS

SCALE:	DRAWN BY:	CHECKED BY:	DATE:	BRIDGE SHEET:
N.T.S.	RES	TKE	6/13/13	3 OF 31

PROJECT NUMBER	PRODUCT CODE	RELEASE	SHEET
40606	1021	1	3

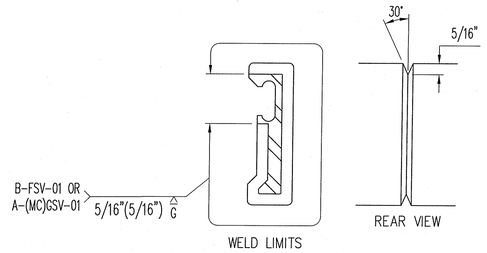

EDGE BEAM SHOP SPLICE DETAIL

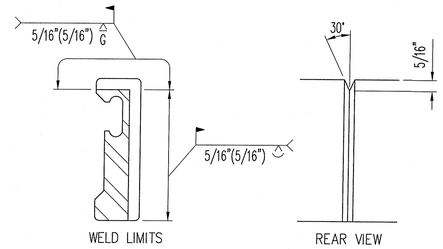

EDGE BEAM FIELD SPLICE DETAIL

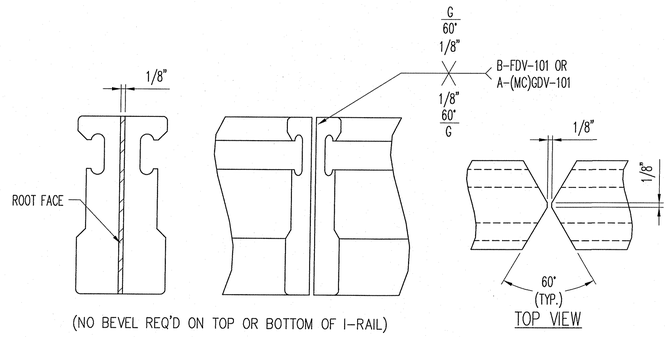

(NO BEVEL REQ'D ON TOP OR BOTTOM OF I-RAIL)

CENTER BEAM SHOP SPLICE DETAIL

COMPLETE PENETRATION WELD

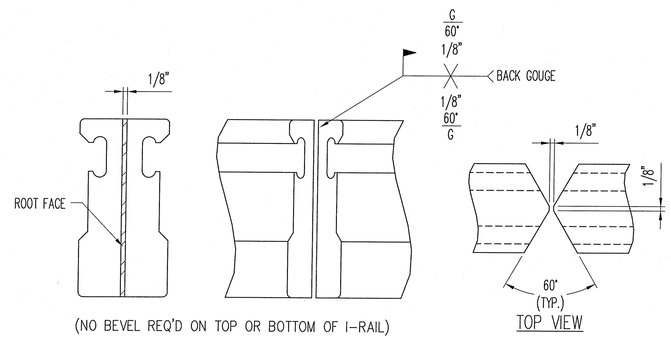

(NO BEVEL REQ'D ON TOP OR BOTTOM OF I-RAIL)

CENTER BEAM FIELD SPLICE DETAIL

COMPLETE PENETRATION WELD

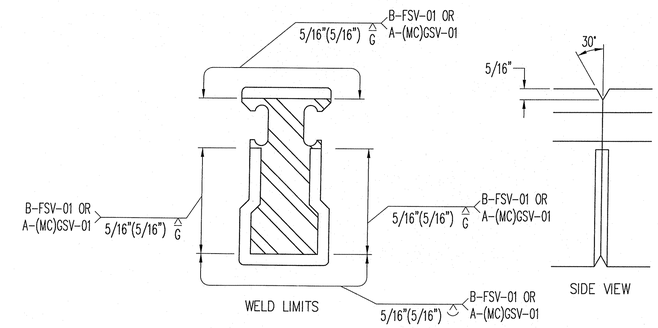

CENTER BEAM UPTURN SHOP SPLICE DETAIL

PARTIAL PENETRATION WELD (@ UPTURNS ONLY U.N.O.)

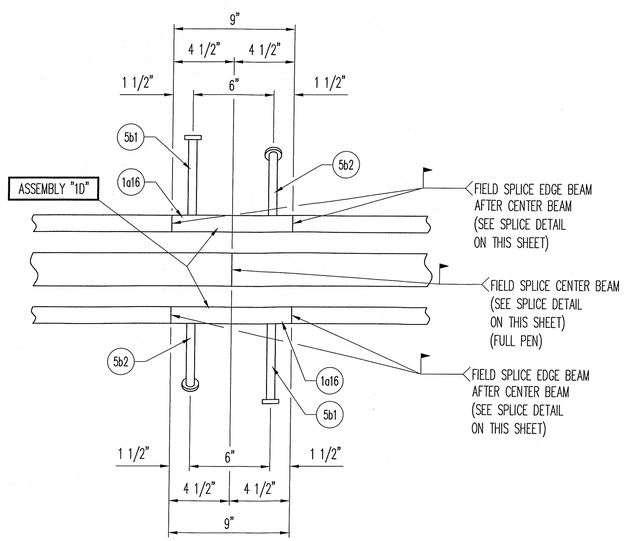

DETAIL F1

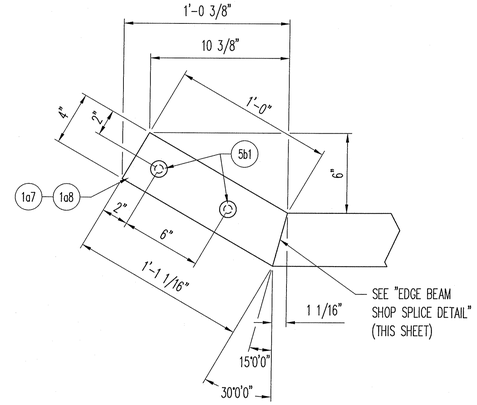

EDGE BEAM UPTURN DETAIL

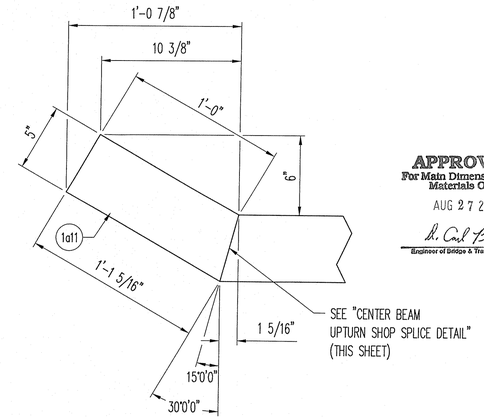

CENTER BEAM UPTURN DETAIL

APPROVED
For Main Dimensions and Materials Only
AUG 27 2013
Engineer of Bridge & Traffic Structures

REV.	DESCRIPTION	DATE	DET.	CKD.

D.S. BROWN
A GIBRALTAR INDUSTRIES COMPANY

THE D.S. BROWN COMPANY
300 E. CHERRY STREET
NORTH BALTIMORE, OHIO 45872
419.257.3561
FAX: 419.257.0332
WWW.DSBROWN.COM

LOCATION — I-24 OVER THE OHIO RIVER
STRUCTURE NO. — 064-0035
ROUTE — FAI ROUTE 24 (I-24)
SECTION — BSMART 2013-1
CONTRACT NO. — 78293 DISTRICT NO. — 9
P.O. NO. — 7838
DESIGNER — ILLINOIS DEPARTMENT OF TRANSPORTATION
CUSTOMER — HENNEGAN & ASSOCIATES (JOB NO. 06-0113)

ITEM	QUANTITY
–	–
–	–
–	–
–	–
–	–
–	–
–	–
–	–
–	–
–	–

DESCRIPTION: "D-160" STANDARD DETAILS
MASSAC COUNTY, ILLINOIS

SCALE:	DRAWN BY:	CHECKED BY:	DATE:	BRIDGE SHEET:
N.T.S.	RES	TKE	6/13/13	4 OF 31

PROJECT NUMBER	PRODUCT CODE	RELEASE	SHEET
40606	1021	1	4

GENERAL NOTES

MATERIAL AND WORKMANSHIP SHALL BE IN ACCORDANCE WITH THE ILLINOIS DEPARTMENT OF TRANSPORTATION "STANDARD SPECIFICATIONS FOR ROAD AND BRIDGE CONSTRUCTION", ADOPTED JANUARY 1, 2012, SPECIAL PROVISIONS, AND CONTRACT DOCUMENTS.

EDGE BEAMS, CENTER BEAMS, AND SUPPORT BARS SHALL BE AASHTO M270 GRADE 50 (ASTM–A572) OR GRADE 50W (ASTM–A588) STEEL.

SUPPORT BOXES SHALL BE ASTM–A500 GRADE B STEEL.

STAINLESS STEEL SLIDING SURFACES SHALL BE ASTM–A240, TYPE 304, WITH A 2b FINISH.

STUD ANCHORS SHALL BE ASTM–A108 STEEL AND AUTOMATICALLY END WELDED WITH COMPLETE FUSION.
REPAIR STUDS USING WELD PROCEDURE NO. A–SM–STUD–REP–01, B–FF–STUD–REP–01, OR A–(MC)GF–STUD–REP–01.

ALL STEEL SURFACES IN THE MODULAR EXPANSION JOINT ASSEMBLIES (EXCEPT STAINLESS STEEL) SHALL BE HOT–DIPPED GALVANIZED AFTER FABRICATION IN ACCORDANCE WITH AASHTO M111 (ASTM–A123).
ANY GALVANIZED COATING DAMAGED DURING FIELD WELDING OR FROM OTHER CAUSES MUST BE REPAIRED IN ACCORDANCE WITH ASTM A780.
DUE TO TANK LIMITATIONS, ASSEMBLIES MAY BE DIPPED IN SECTIONS AND SHOP SPLICED AFTER GALVANIZING.
REPAIR OF GALVANIZING SHALL BE IN ACCORDANCE WITH ASTM A780.

LIFTING DEVICES MAY BE WELDED TO PARTS FOR GALVANIZING IF NECESSARY.
WHEN THEIR USE IS COMPLETE, REMOVE AND GRIND FLUSH ALL CONNECTION LOCATIONS.
REPAIR GALVANIZING IN ACCORDANCE WITH ASTM A780.

MODULAR JOINT SHALL BE EQUIPPED WITH TEMPERATURE ADJUSTMENT DEVICES TO ALLOW FOR ADJUSTMENTS PER FIELD ENGINEERS RECOMMENDATIONS.

HOLES MUST BE DRILLED OR PUNCHED.

NEOPRENE STRIP SEAL SHALL BE CONTINUOUS AND FIELD INSTALLED WITH A LUBRICANT ADHESIVE.
FIELD INSTALL ONLY IN ASSEMBLY 1A DURING THE FIRST CONSTRUCTION STAGE.
REMAINDER OF SEAL SHALL BE ROLLED UP ON THE FIELD SPLICE END.
SEAL SHALL THEN BE FIELD INSTALLED WITH A LUBRICANT ADHESIVE IN SECOND STAGE AFTER FIELD WELDING IS COMPLETE.
NO FIELD SPLICES OF THE STRIP SEAL GLANDS SHALL BE PERMITTED.
CONTRACTOR SHALL PROTECT SEAL DURING THE 1ST STAGE OF CONSTRUCTION TO PREVENT DAMAGE PRIOR TO THE 2ND STAGE OF CONSTRUCTION.
SEAL SHALL ALSO BE PROTECTED AND CLEAR OF THE AREA TO BE FIELD WELDED.

ILDOT REQUIRES THE USE OF PRE–APPROVED STRIP SEAL GLAND.
NEOPRENE STRIP SEAL SHALL MEET THE REQUIREMENTS OF ARTICLE 1052.02(a) OF ILLINOIS DOT STANDARD SPECIFICATIONS.

LUBRICANT/ADHESIVE SHALL BE A ONE–PART, MOISTURE CURING, POLYURETHANE AND HYDROCARBON SOLVENT MIXTURE AS RECOMMENDED BY THE STRIP SEAL MANUFACTURER AND CONTAINING NOT LESS THAN 65% SOLIDS.

ALL STEEL SURFACES IN CONTACT WITH THE NEOPRENE SEAL SHALL BE CLEANED PRIOR TO THE INSTALLATION OF THE STRIP SEAL.

CARE SHALL BE TAKEN TO PREVENT DAMAGE DURING MOVING AND SHIPPING OF JOINT.

MODULAR JOINT SHALL FOLLOW ROADWAY SLOPE AND GRADE.

MODULAR JOINT SHALL BE MARKED SHOWING JOINT TYPE AND PROPER LOCATION.
MARKINGS SHALL BE VISIBLE AFTER JOINT HAS BEEN COMPLETELY INSTALLED.

THE MODULAR EXPANSION JOINT ASSEMBLIES SHALL BE INSPECTED BY D.S. BROWN QC DEPARTMENT AND BY AN ILLINOIS REPRESENTATIVE AS REQUIRED.

WELDING SHALL BE IN ACCORDANCE WITH AASHTO/AWS D1.5 BRIDGE WELDING CODE AND SHALL BE DONE BY CERTIFIED WELDERS.

MODULAR JOINT SHALL BE DESIGNED TO ACCOMMODATE FATIGUE LOADING, PER DESIGN CRITERIA FOR MODULAR BRIDGE EXPANSION JOINTS AS SPECIFIED IN NCHRP REPORT 402 & 467.

ALL FULL PENETRATION WELDS SHALL BE 100% UT.
ALL PARTIAL PENETRATION AND FILLET WELDS SHALL BE 10% MT.
ALL NDE SHALL BE PERFORMED BY IN–HOUSE PERSONNEL.

ANY TIGHTLY ADHERENT WELD SPATTER NEED NOT BE REMOVED IN COATING AREAS TO BE CAST IN CONCRETE.

REPAIR THERMAL CUT GOUGES EXCEEDING AWS BY USING WELD PROCEDURE B–F–REP–100 OR A–(MC)G–REP–100.

MB 5/8"ø X 3 1/2" SQHD A307 SPRING ACCESS PLATE BOLT (ITEM 2f2) MAY EITHER BE COATED WITH ZINC PLATING OR MECHANICAL GALVANIZING.

SUPPORT BAR BEARINGS SHALL BE FABRICATED WITH PTFE SLIDING SURFACES PER STD. SPEC. 1083.

RAIL LENGTHS AND ROADWAY SLOPES SHALL BE VERIFIED BY CONTRACTOR TO ENSURE ACCURACY OF THE EXPANSION JOINTS.
STAMPED APPROVED DRAWINGS ASSUME DRAWINGS HAVE BEEN REVIEWED BY CONTRACTOR.

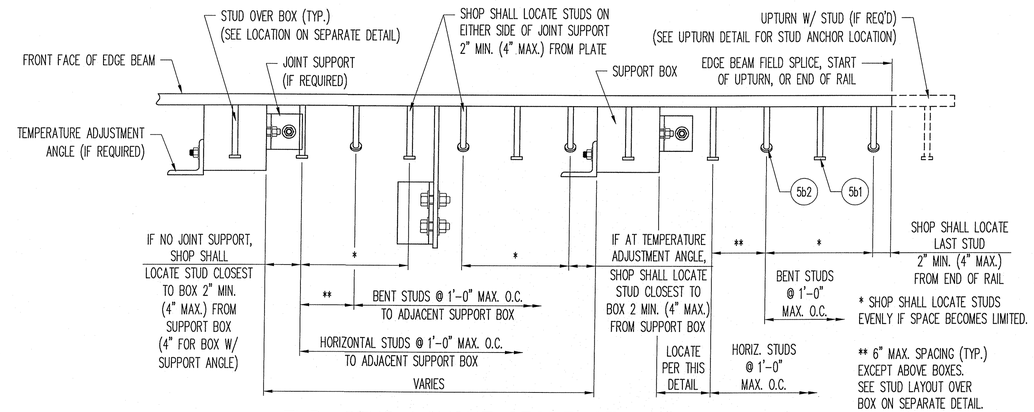

TYP. STUD LAYOUT SEQUENCE ALONG EDGE BEAM

IF INTERFERENCE OCCURS WITH A GIRDER SUPPORT PLATE, SHOP SHALL SHIFT STUD AS INDICATED ABOVE.

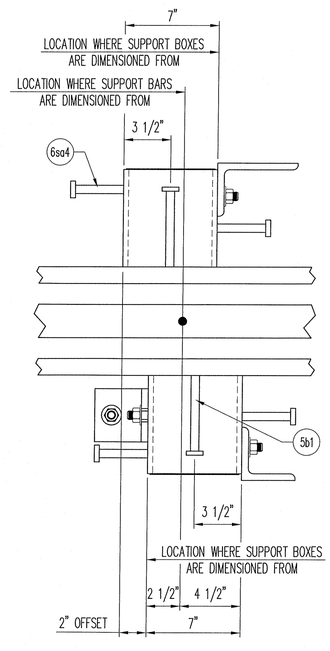

PLAN VIEW @ SUPPORT BOX

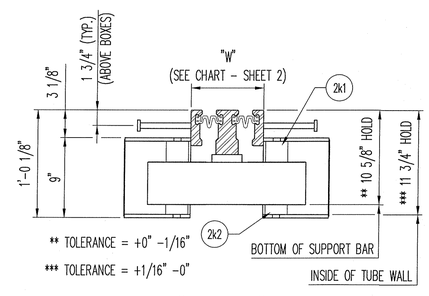

SECTION THRU "D–160" @ SUPPORT BOX

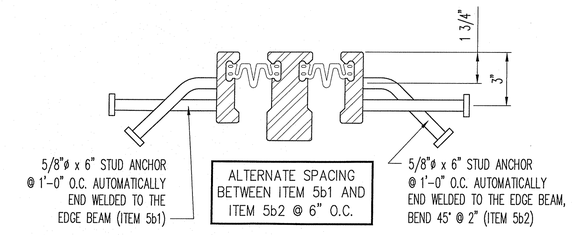

SECTION THRU "D–160" BETWEEN SUPPORT BOXES (EDGE BEAM ANCHORAGE)

APPROVED
For Main Dimensions and Materials Only
AUG 27 2013
R. Carl Pfeifer
Engineer of Bridge & Traffic Structures

REV.	DESCRIPTION	DATE	DET.	CKD.

D.S. BROWN
A GIBRALTAR INDUSTRIES COMPANY
THE D.S. BROWN COMPANY
300 E. CHERRY STREET
NORTH BALTIMORE, OHIO 45872
419.257.3561
FAX: 419.257.0332
WWW.DSBROWN.COM

	ITEM	QUANTITY
LOCATION — I–24 OVER THE OHIO RIVER	–	–
STRUCTURE NO. — 064–0035	–	–
ROUTE — FAI ROUTE 24 (I–24)	–	–
SECTION — BSMART 2013–1	–	–
CONTRACT NO. — 78293 DISTRICT NO. — 9	–	–
P.O. NO. — 7838	–	–
DESIGNER — ILLINOIS DEPARTMENT OF TRANSPORTATION	–	–
CUSTOMER — HENNEGAN & ASSOCIATES (JOB NO. 06–0113)	–	–

DESCRIPTION:	SCALE:	DRAWN BY:	CHECKED BY:	DATE:	BRIDGE SHEET:
"D–160" SECTIONS & STANDARD DETAILS MASSAC COUNTY, ILLINOIS	N.T.S.	RES	TKE	6/13/13	5 OF 31
	PROJECT NUMBER: 40606	PRODUCT CODE: 1021	RELEASE: 1	SHEET: 5	

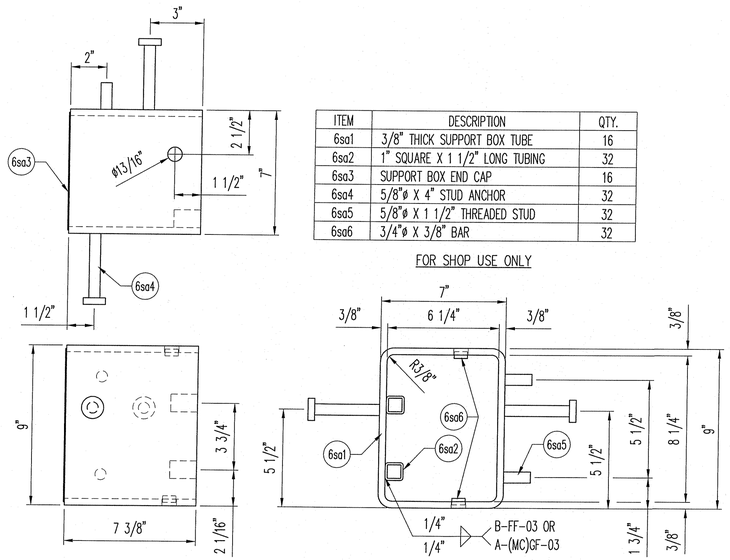

ITEM	DESCRIPTION	QTY.
6sa1	3/8" THICK SUPPORT BOX TUBE	16
6sa2	1" SQUARE X 1 1/2" LONG TUBING	32
6sa3	SUPPORT BOX END CAP	16
6sa4	5/8"ø X 4" STUD ANCHOR	32
6sa5	5/8"ø X 1 1/2" THREADED STUD	32
6sa6	3/4"ø X 3/8" BAR	32

FOR SHOP USE ONLY

"D-160" SUPPORT BOX DETAIL "6A"

(16) REQUIRED

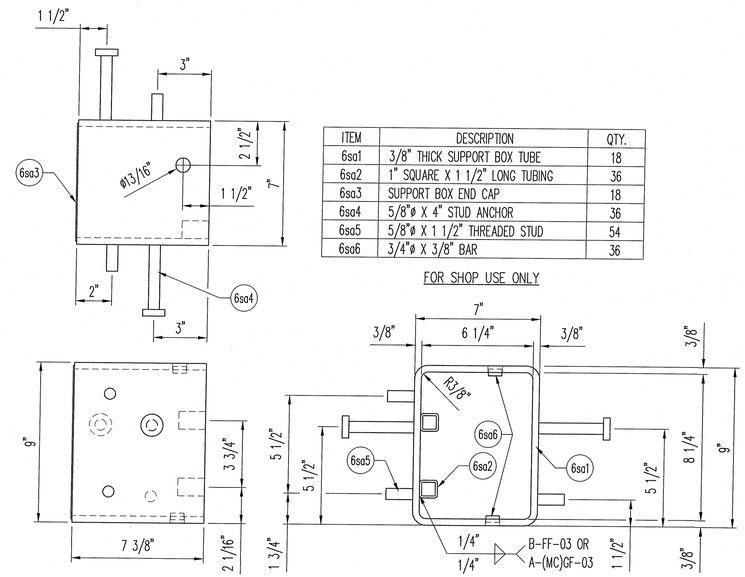

ITEM	DESCRIPTION	QTY.
6sa1	3/8" THICK SUPPORT BOX TUBE	18
6sa2	1" SQUARE X 1 1/2" LONG TUBING	36
6sa3	SUPPORT BOX END CAP	18
6sa4	5/8"ø X 4" STUD ANCHOR	36
6sa5	5/8"ø X 1 1/2" THREADED STUD	54
6sa6	3/4"ø X 3/8" BAR	36

FOR SHOP USE ONLY

"D-160" SUPPORT BOX DETAIL "6B"

(18) REQUIRED

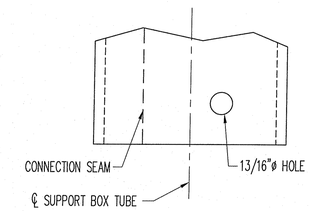

SHOP NOTE:

WHEN DRILLING 13/16"ø HOLES INTO SUPPORT BOX TUBE, BE SURE THE SEAM OF THE TUBE IS ON THE OPPOSITE SIDE IN RELATIONSHIP TO THE ℄ OF BOX.

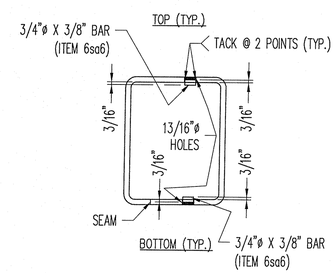

BOX DETAILS

(W/ RUBBER SPRINGS & BEARINGS)

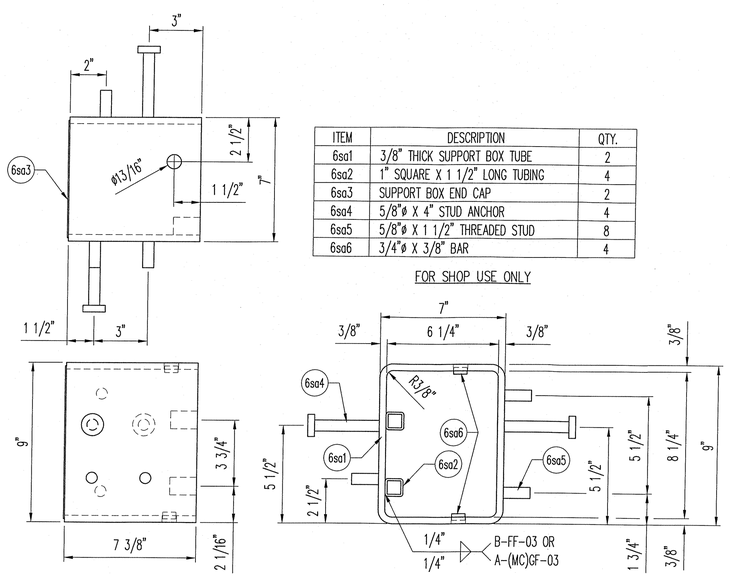

ITEM	DESCRIPTION	QTY.
6sa1	3/8" THICK SUPPORT BOX TUBE	2
6sa2	1" SQUARE X 1 1/2" LONG TUBING	4
6sa3	SUPPORT BOX END CAP	2
6sa4	5/8"ø X 4" STUD ANCHOR	4
6sa5	5/8"ø X 1 1/2" THREADED STUD	8
6sa6	3/4"ø X 3/8" BAR	4

FOR SHOP USE ONLY

"D-160" SUPPORT BOX DETAIL "6C"

(2) REQUIRED

APPROVED
For Main Dimensions and Materials Only
AUG 27 2013
R. Carl Lampe
Engineer of Bridge & Traffic Structures

REV.	DESCRIPTION	DATE	DET.	CKD.

D.S. BROWN
A GIBRALTAR INDUSTRIES COMPANY
THE D.S. BROWN COMPANY
300 E. CHERRY STREET
NORTH BALTIMORE, OHIO 45872
419.257.3561
FAX: 419.257.0332
WWW.DSBROWN.COM

LOCATION — I-24 OVER THE OHIO RIVER
STRUCTURE NO. — 064-0035
ROUTE — FAI ROUTE 24 (I-24)
SECTION — BSMART 2013-1
CONTRACT NO. — 78293 DISTRICT NO. — 9
P.O. NO. — 7838
DESIGNER — ILLINOIS DEPARTMENT OF TRANSPORTATION
CUSTOMER — HENNEGAN & ASSOCIATES (JOB NO. 06-0113)

ITEM	QUANTITY
–	–
–	–
–	–
–	–
–	–
–	–
–	–
–	–
–	–

DESCRIPTION:	SCALE:	DRAWN BY:	CHECKED BY:	DATE:	BRIDGE SHEET:
"D-160" SUPPORT BOX DETAILS MASSAC COUNTY, ILLINOIS	N.T.S.	RES	TKE	6/13/13	6 OF 31
	PROJECT NUMBER	PRODUCT CODE	RELEASE	SHEET	
	40606	1021	1	6	

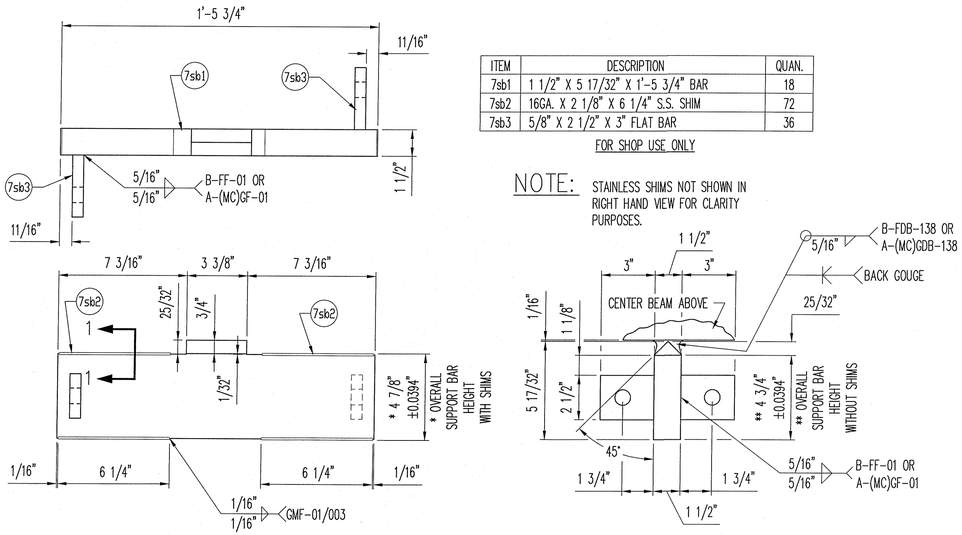

ITEM	DESCRIPTION	QUAN.
7sb1	1 1/2" X 5 17/32" X 1'-5 3/4" BAR	18
7sb2	16GA. X 2 1/8" X 6 1/4" S.S. SHIM	72
7sb3	5/8" X 2 1/2" X 3" FLAT BAR	36

FOR SHOP USE ONLY

NOTE: STAINLESS SHIMS NOT SHOWN IN RIGHT HAND VIEW FOR CLARITY PURPOSES.

"D-160" SUPPORT BAR DETAIL

(18) REQUIRED

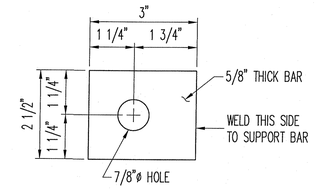

ITEM NO. 7sb3

(36) REQ'D.

SPRING STOP DETAIL

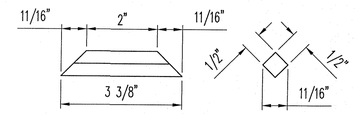

ITEM NO. 7sb4

(18) REQ'D.

OPTIONAL RIDER BAR DETAIL

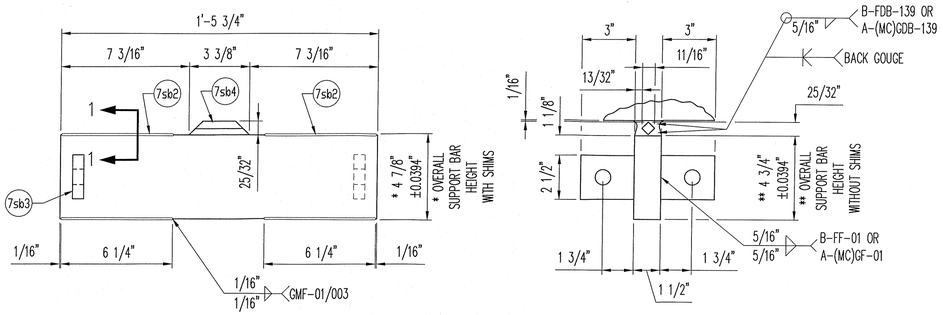

OPTIONAL "D-160" SUPPORT BAR DETAIL

(WITH RIDER BAR)

(IN LIEU OF MACHINED SUPPORT BAR)

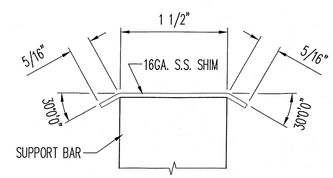

SECTION 1-1

APPROVED
For Main Dimensions and Materials Only
AUG 27 2013
Engineer of Bridge & Traffic Structures

REV.	DESCRIPTION	DATE	DET.	CKD.

D.S. BROWN
A GIBRALTAR INDUSTRIES COMPANY

THE D.S. BROWN COMPANY
300 E. CHERRY STREET
NORTH BALTIMORE, OHIO 45872
419.257.3561
FAX: 419.257.0332
WWW.DSBROWN.COM

LOCATION — I-24 OVER THE OHIO RIVER
STRUCTURE NO. — 064-0035
ROUTE — FAI ROUTE 24 (I-24)
SECTION — BSMART 2013-1
CONTRACT NO. — 78293 DISTRICT NO. — 9
P.O. NO. — 7838
DESIGNER — ILLINOIS DEPARTMENT OF TRANSPORTATION
CUSTOMER — HENNEGAN & ASSOCIATES (JOB NO. 06-0113)

ITEM	QUANTITY
–	–
–	–
–	–
–	–
–	–
–	–
–	–
–	–
–	–
–	–

DESCRIPTION: "D-160" SUPPORT BAR DETAILS
MASSAC COUNTY, ILLINOIS

SCALE:	DRAWN BY:	CHECKED BY:	DATE:	BRIDGE SHEET:
N.T.S.	RES	TKE	6/13/13	7 OF 31
PROJECT NUMBER	PRODUCT CODE	RELEASE	SHEET	
40606	1021	1	7	

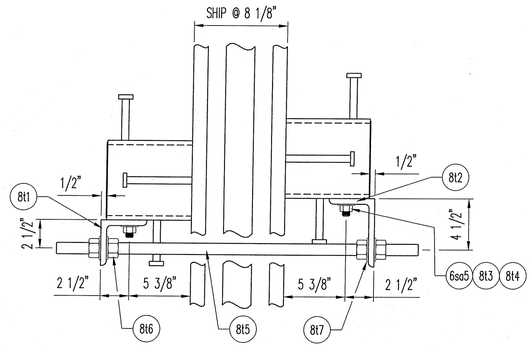

SUPPORT BOX PLAN VIEW W/ TEMPORARY ADJUSTMENT DEVICE

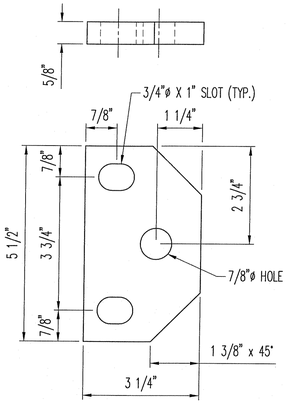

ITEM NO. 2f1
(36) REQ'D.

SPRING ACCESS PLATE DETAIL

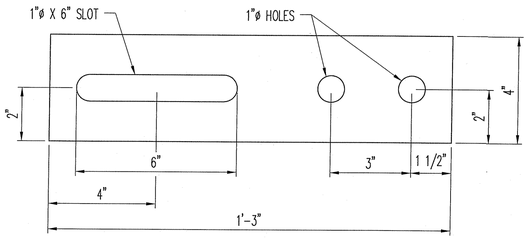

JOINT SUPPORT ANGLE DETAIL
ASSEMBLY 2GB
ITEM NO. 2g2
(LOCATED AT SUPPORT BOXES)
(2) REQ'D.

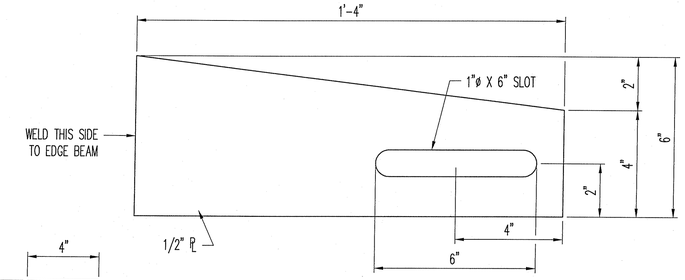

ITEM NO. 3g1
(7) REQ'D.

JOINT SUPPORT PLATE DETAIL
(LOCATED ON SPAN SIDE – SEE SHEET 1 FOR LOCATIONS)

ADJUSTMENT ANGLES & TOP ADJUSTMENT ROD LOCATED ON EVERY PAIR OF SUPPORT BOXES AND
BOTTOM ADJUSTMENT ROD LOCATED ON EVERY OTHER PAIR OF SUPPORT BOXES & OUTSIDE BOXES
6" X 4" X 1/2" X 1'-3" WIDE ANGLE (NEAR SIDE)
4" X 4" X 1/2" X 1'-3" WIDE ANGLE (FAR SIDE)
TEMPERATURE ADJUSTMENT DEVICES ALSO INCLUDE (2) 1"ø X 2'-6"
THREADED RODS WITH (4) HEX NUTS AND (4) WASHERS PER ROD. REMOVE
ADJUSTMENT DEVICES AFTER JOINT HAS BEEN PERMANENTLY SET INTO BLOCKOUT.

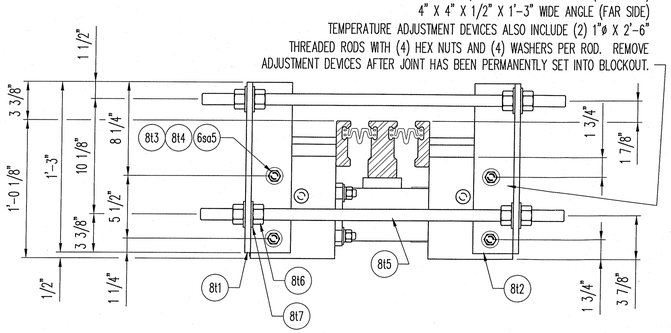

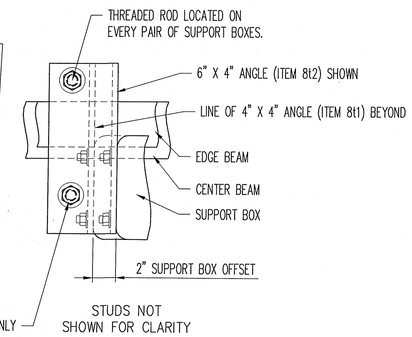

"D-160" TEMPORARY ADJUSTMENT DETAIL
(SEE JOINT PLAN VIEW ON SHEET 1 FOR LOCATIONS)

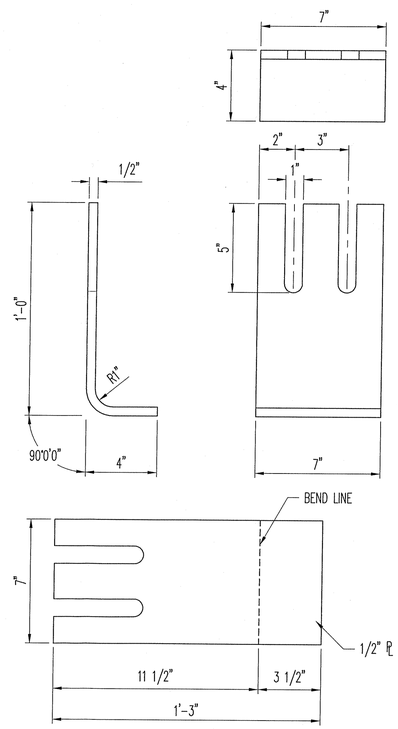

JOINT SUPPORT PLATE DETAIL
ASSEMBLY 2GC
ITEM NO. 2g3
(LOCATED AT DIAPHRAGMS)
(2) REQ'D.

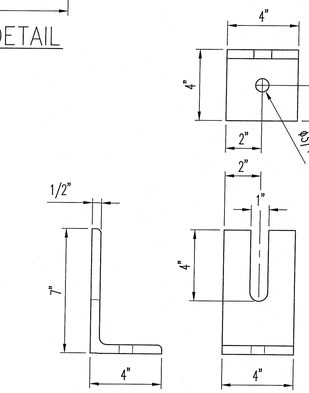

JOINT SUPPORT ANGLE DETAIL
ASSEMBLY 2GA
ITEM NO. 2g1
(LOCATED AT SUPPORT BOXES)
(18) REQ'D.

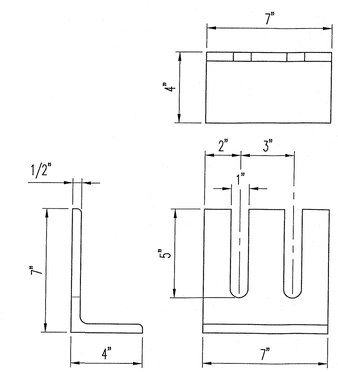

JOINT SUPPORT ANGLE DETAIL
ASSEMBLY 3GA
ITEM NO. 3g2
(LOCATED AT STRINGERS)
(5) REQ'D.

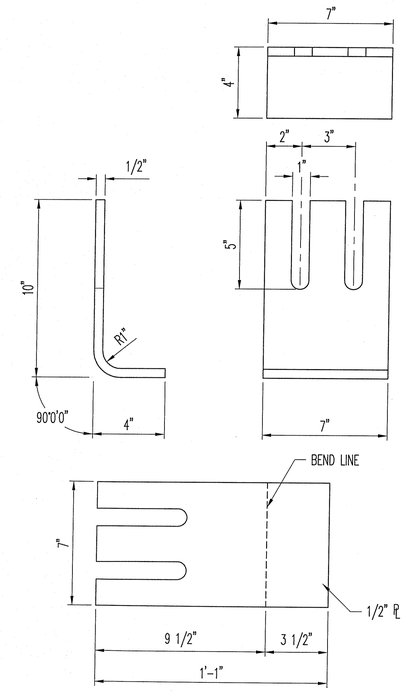

JOINT SUPPORT PLATE DETAIL
ASSEMBLY 3GB
ITEM NO. 3g3
(LOCATED AT GIRDERS)
(2) REQ'D.

APPROVED
For Main Dimensions and Materials Only
AUG 27 2013
Engineer of Bridge & Traffic Structures

ATTACH THIS SURFACE TO SUPPORT BOXES
4" X 4" X 1/2" ANGLE, 1'-3" LONG
1/2" (TYP.)

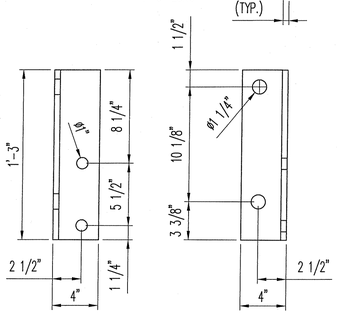

ITEM NO. 8t1
(18) REQ'D.

ATTACH THIS SURFACE TO SUPPORT BOXES
1/2" (TYP.)
6" X 4" X 1/2" ANGLE, 1'-3" LONG

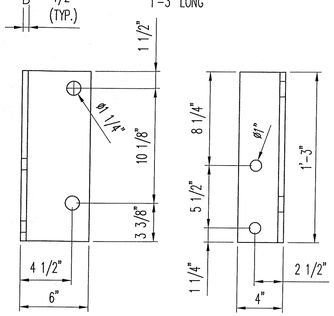

ITEM NO. 8t2
(18) REQ'D.

REV.	DESCRIPTION	DATE	DET.	CKD.

D.S. BROWN
A GIBRALTAR INDUSTRIES COMPANY

THE D.S. BROWN COMPANY
300 E. CHERRY STREET
NORTH BALTIMORE, OHIO 45872
419.257.3561
FAX: 419.257.0332
WWW.DSBROWN.COM

LOCATION — I-24 OVER THE OHIO RIVER
STRUCTURE NO. — 064-0035
ROUTE — FAI ROUTE 24 (I-24)
SECTION — BSMART 2013-1
CONTRACT NO. — 78293 DISTRICT NO. — 9
P.O. NO. — 7838
DESIGNER — ILLINOIS DEPARTMENT OF TRANSPORTATION
CUSTOMER — HENNEGAN & ASSOCIATES (JOB NO. 06-0113)

ITEM	QUANTITY
–	–
–	–
–	–
–	–
–	–
–	–
–	–
–	–
–	–
–	–

DESCRIPTION:	SCALE:	DRAWN BY:	CHECKED BY:	DATE:	BRIDGE SHEET:
"D-160" STANDARD DETAILS MASSAC COUNTY, ILLINOIS	N.T.S.	RES	TKE	6/13/13	8 OF 31
	PROJECT NUMBER: 40606	PRODUCT CODE: 1021	RELEASE: 1	SHEET: 8	

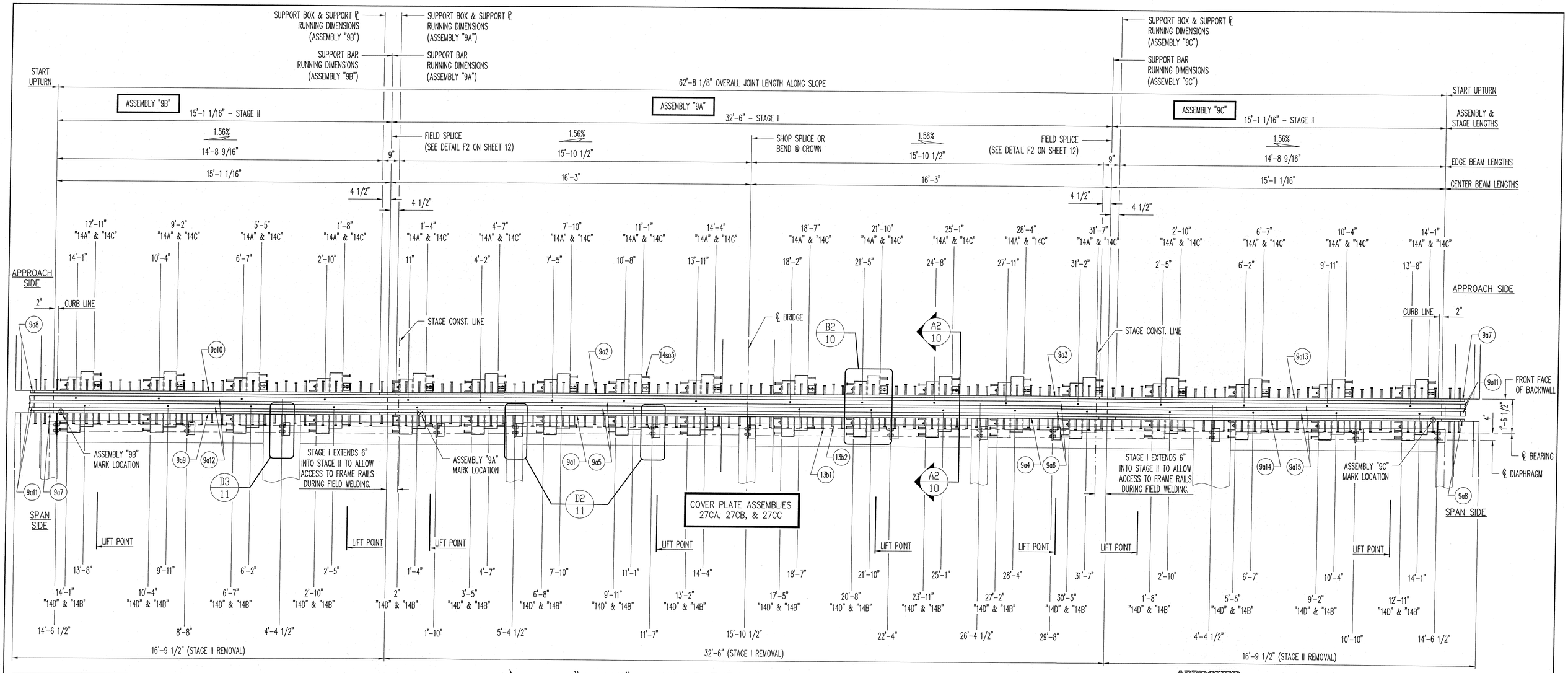

COVER PLATE ASSEMBLIES 23CA & 23CB

COVER PLATE ASSEMBLIES 25CA & 25CB

N

"D-240" MODULAR EXPANSION JOINT PLAN VIEW

I-24 OVER THE OHIO RIVER
STRUCTURE NO. 064-0035
LOCATED AT CELL B
BOX SPACING = 3'-3", 3'-9", & 4'-3"
(1) JOINT REQUIRED
- LOOKING SOUTH -

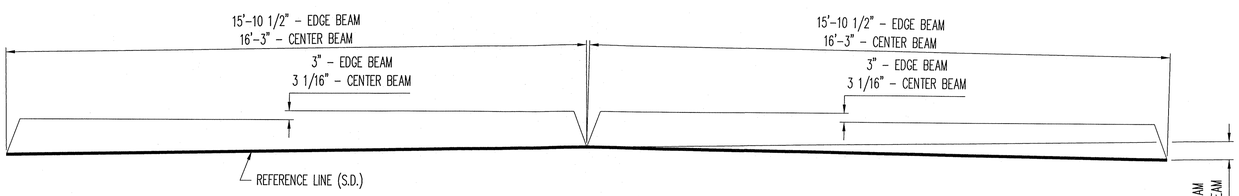

ASSEMBLY "9A" ELEVATION SCHEMATIC

ALL DIMENSIONS TO TOP OF RAILS
S.D. = SHOP DIMENSION
N.T.S.

SHOP NOTES:

- SEE INSTALLATION PROCEDURES ON SHEET 11
- SEE UPTURN DETAILS ON SHEET 12
- SEE SPLICE DETAILS ON SHEET 12
- SEE GENERAL NOTES ON SHEET 13
- SEE STUD LAYOUT SEQUENCE ALONG EDGE BEAM ON SHEET 13
- SEE SUPPORT BOX DETAILS ON SHEET 14
- SEE SUPPORT BAR DETAILS ON SHEET 15
- SEE TEMPERATURE ADJUSTMENT DETAILS ON SHEETS 10 & 16
- SEE SPRING ACCESS PLATE DETAIL ON SHEET 16
- COVER PLATES NOT SHOWN FOR CLARITY PURPOSES (SEE COVER PLATE DETAILS ON SHEETS 17 THRU 28)
- SEE BILL OF MATERIALS ON SHEET 29 THRU 31

APPROVED
For Main Dimensions and Materials Only
AUG 27 2013
R. Carl Fungaroli
Engineer of Bridge & Traffic Structures

FABRICATION NOTE:

- SHOP SHALL LOCATE SPLICES IN EDGE & CENTER BEAMS. MINIMUM SPLICE LENGTH SHALL BE 2'-0" FOR EDGE BEAMS & 4'-0" FOR CENTER BEAMS.

REV.	DESCRIPTION	DATE	DET.	CKD.

D.S. BROWN
A GIBRALTAR INDUSTRIES COMPANY
THE D.S. BROWN COMPANY
300 E. CHERRY STREET
NORTH BALTIMORE, OHIO 45872
419.257.3561
FAX: 419.257.0332
WWW.DSBROWN.COM

LOCATION — I-24 OVER THE OHIO RIVER
STRUCTURE NO. — 064-0035
ROUTE — FAI ROUTE 24 (I-24)
SECTION — BSMART 2013-1
CONTRACT NO. — 78293 DISTRICT NO. — 9
P.O. NO. — 7838
DESIGNER — ILLINOIS DEPARTMENT OF TRANSPORTATION
CUSTOMER — HENNEGAN & ASSOCIATES (JOB NO. 06-0113)

ITEM	QUANTITY
–	–
–	–
–	–
–	–
–	–
–	–
–	–
–	–
–	–

DESCRIPTION:	SCALE:	DRAWN BY:	CHECKED BY:	DATE:	BRIDGE SHEET:
"D-240" PLAN VIEW MASSAC COUNTY, ILLINOIS	N.T.S.	RES	TKE	6/13/13	9 OF 31
	PROJECT NUMBER	PRODUCT CODE	RELEASE	SHEET	
	40606	1021	1	9	

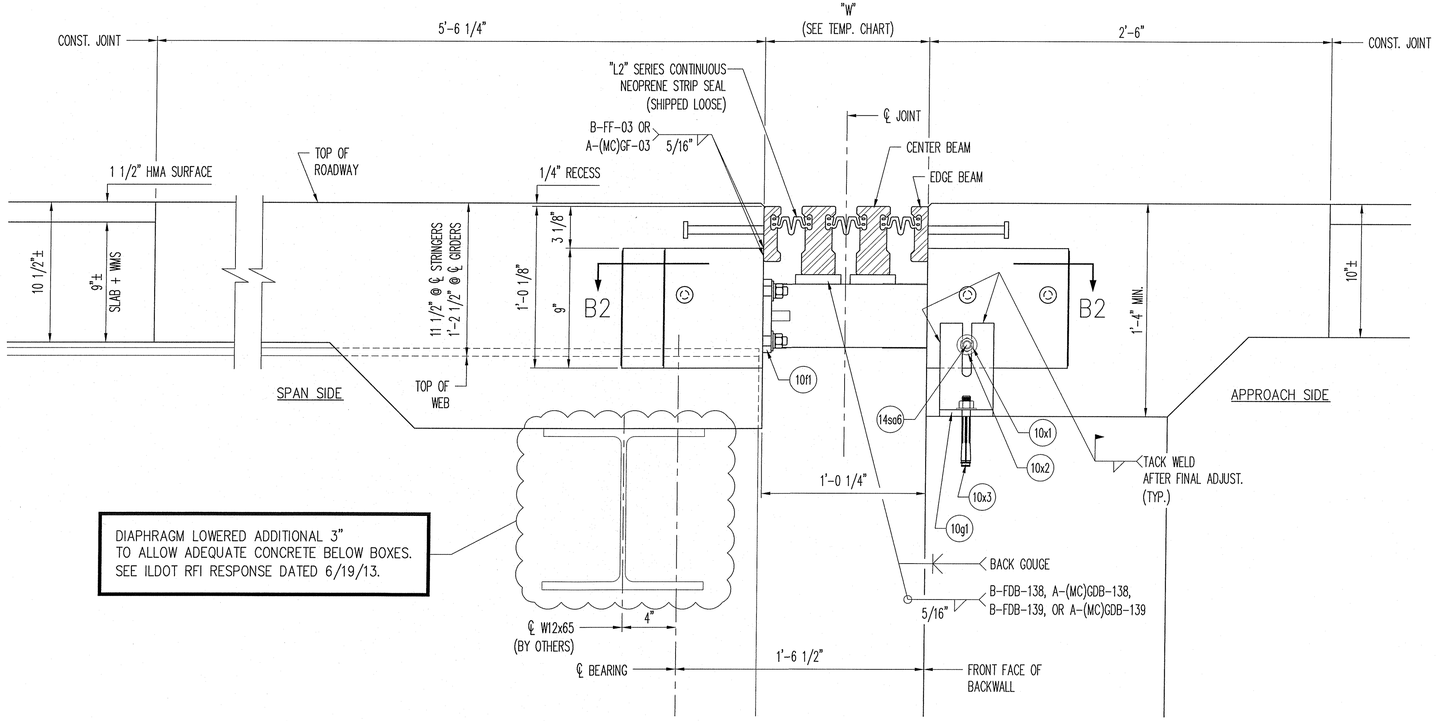

DIAPHRAGM LOWERED ADDITIONAL 3" TO ALLOW ADEQUATE CONCRETE BELOW BOXES. SEE ILDOT RFI RESPONSE DATED 6/19/13.

SECTION A2

DIMENSIONS SHOWN ARE AT MID. TEMP. (50°F)

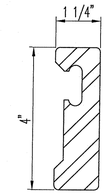

EDGE BEAM DETAIL

AASHTO M270 GRADE 50 (ASTM-A572) OR GRADE 50W (ASTM-A588) STEEL

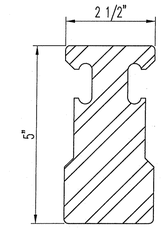

CENTER BEAM DETAIL

AASHTO M270 GRADE 50 (ASTM-A572) OR GRADE 50W (ASTM-A588) STEEL

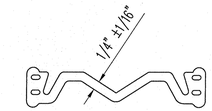

"L2" SERIES STRIP SEAL

L2-400 SEAL
(SHIPPED LOOSE)

"D-240" OPERATING DIMENSIONS "W"	
STRUCT. TEMP.	CELL B
MAX.	7 1/2"
120°F	9"
110°F	9 7/16"
100°F	9 15/16"
90°F	10 3/8"
80°F	10 7/8"
70°F	11 5/16"
60°F	11 13/16"
50°F (MID. TEMP.)	1'-0 1/4"
40°F	1'-0 11/16"
30°F	1'-1 3/16"
20°F	1'-1 5/8"
10°F	1'-2 1/8"
0°F	1'-2 9/16"
-10°F	1'-3 1/16"
-20°F	1'-3 1/2"
-30°F	1'-4"
MIN.	1'-4 15/16"

TEMPERATURE ADJUSTMENT CHART

THERMAL MOVEMENT:
COEFFICIENT OF THERMAL EXPANSION x (SPAN LENGTH) (12 IN/FT) (10) = MOVEMENT/10°F

0.0000065 IN/IN/°F x (600') (12 IN/FT) (10) = 0.468"/10°F
NOTE: CONTRIBUTING SPAN LENGTH ASSUMED TO BE THE DISTANCE BETWEEN CELL B AND PIER 16.

SHOP NOTE: SHIP JOINT @ 1'-0 1/4" OPENING (SHIP WITHOUT SEAL INSTALLED)

APPROVED
For Main Dimensions and Materials Only
AUG 27 2013
Engineer of Bridge & Traffic Structures

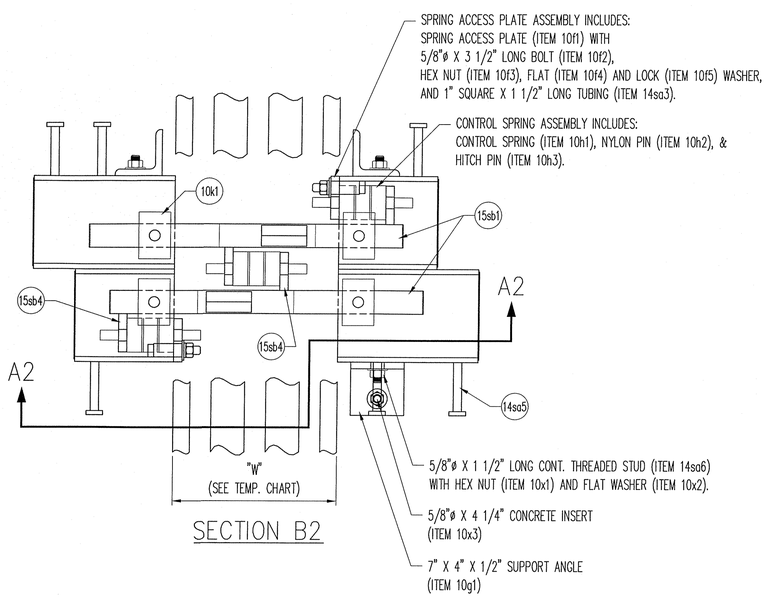

SECTION B2

REV.	DESCRIPTION	DATE	DET.	CKD.

D.S. BROWN
A GIBRALTAR INDUSTRIES COMPANY
THE D.S. BROWN COMPANY
300 E. CHERRY STREET
NORTH BALTIMORE, OHIO 45872
419.257.3561
FAX: 419.257.0332
WWW.DSBROWN.COM

LOCATION — I-24 OVER THE OHIO RIVER
STRUCTURE NO. — 064-0035
ROUTE — FAI ROUTE 24 (I-24)
SECTION — BSMART 2013-1
CONTRACT NO. — 78293 DISTRICT NO. — 9
P.O. NO. — 7838
DESIGNER — ILLINOIS DEPARTMENT OF TRANSPORTATION
CUSTOMER — HENNEGAN & ASSOCIATES (JOB NO. 06-0113)

ITEM	QUANTITY
–	–
–	–
–	–
–	–
–	–
–	–
–	–
–	–
–	–
–	–

DESCRIPTION:	SCALE:	DRAWN BY:	CHECKED BY:	DATE:	BRIDGE SHEET:
"D-240" SECTIONS & STANDARD DETAILS MASSAC COUNTY, ILLINOIS	N.T.S.	RES	TKE	6/13/13	10 OF 31
	PROJECT NUMBER	PRODUCT CODE	RELEASE	SHEET	
	40606	1021	1	10	

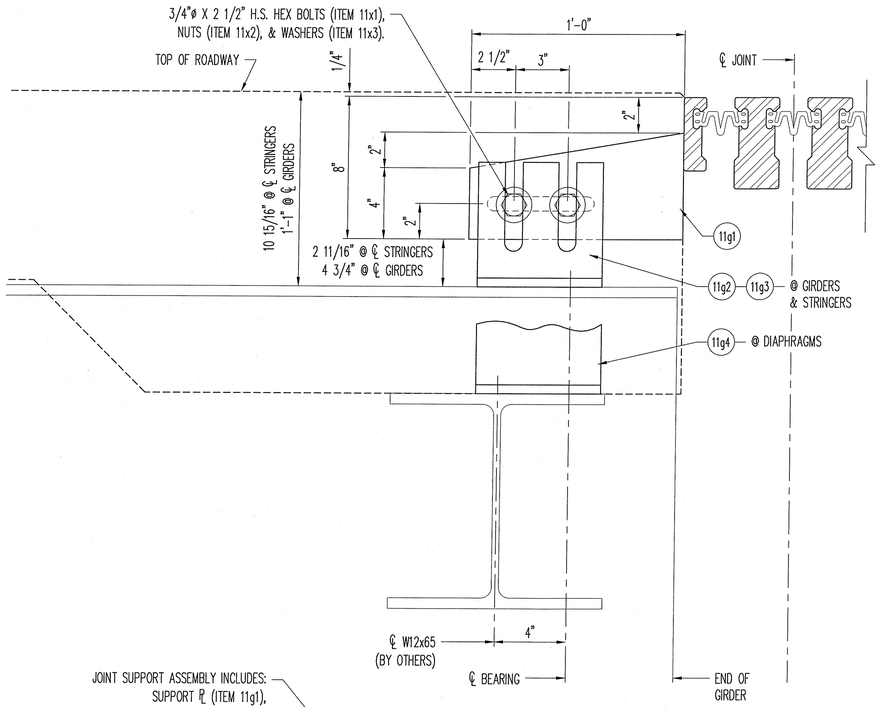

SECTION C2

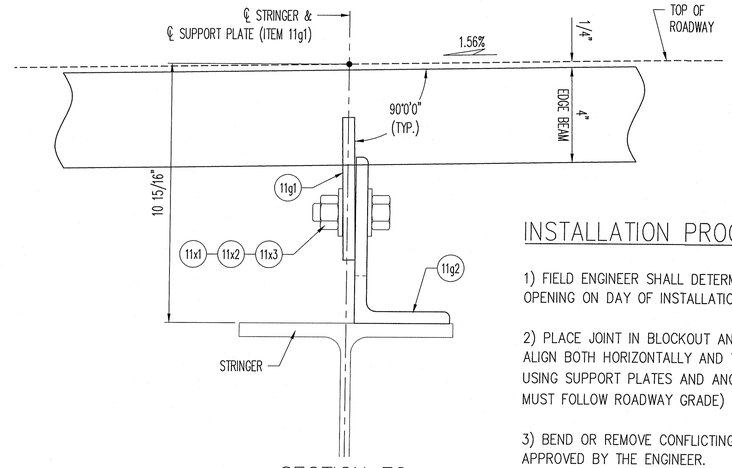

SECTION E2

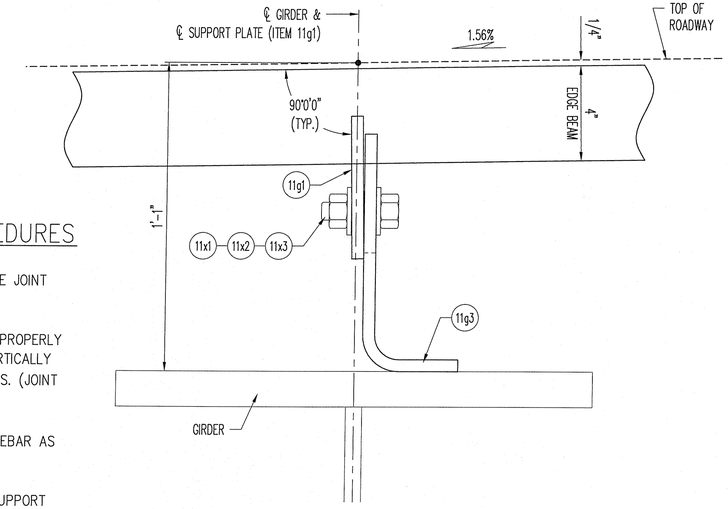

SECTION E3

INSTALLATION PROCEDURES

1) FIELD ENGINEER SHALL DETERMINE JOINT OPENING ON DAY OF INSTALLATION.

2) PLACE JOINT IN BLOCKOUT AND PROPERLY ALIGN BOTH HORIZONTALLY AND VERTICALLY USING SUPPORT PLATES AND ANGLES. (JOINT MUST FOLLOW ROADWAY GRADE)

3) BEND OR REMOVE CONFLICTING REBAR AS APPROVED BY THE ENGINEER.

4) TIGHTEN ALL EXPANSION JOINT SUPPORT CONNECTIONS. CONTRACTOR MAY TACK WELD, IF NEEDED, JOINT SUPPORT CONNECTIONS (SEE SECTIONS D2 & D3 FOR LOCATIONS).

5) REMOVE TEMPERATURE ADJUSTMENT DEVICES AND LIFTING DEVICES SOON AFTER ATTACHMENT TO STRUCTURE.

6) CONTRACTOR TO PLACE FORMWORK SO THAT NO CONCRETE FLOWS INTO BOXES AND JOINT GAP OPENINGS.

7) POUR AND VIBRATE CONCRETE INTO BLOCKOUT TO ENSURE PROPER CONSOLIDATION AROUND ALL EMBEDDED COMPONENTS. REMOVE FORMWORK AFTER CURE TIME, AS DETERMINED BY FIELD ENGINEER.

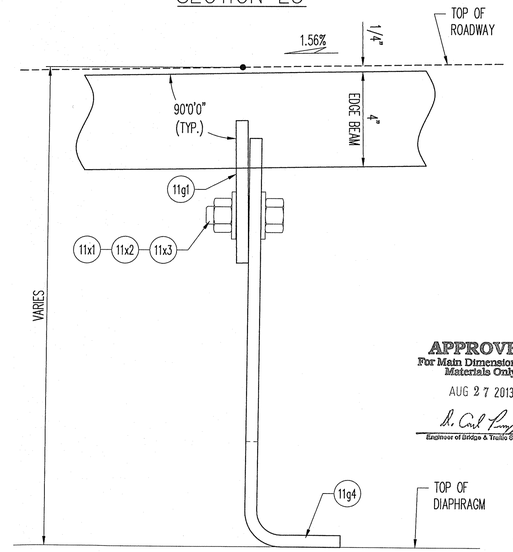

SECTION E4

APPROVED
For Main Dimensions and Materials Only
AUG 27 2013
Engineer of Bridge & Traffic Structures

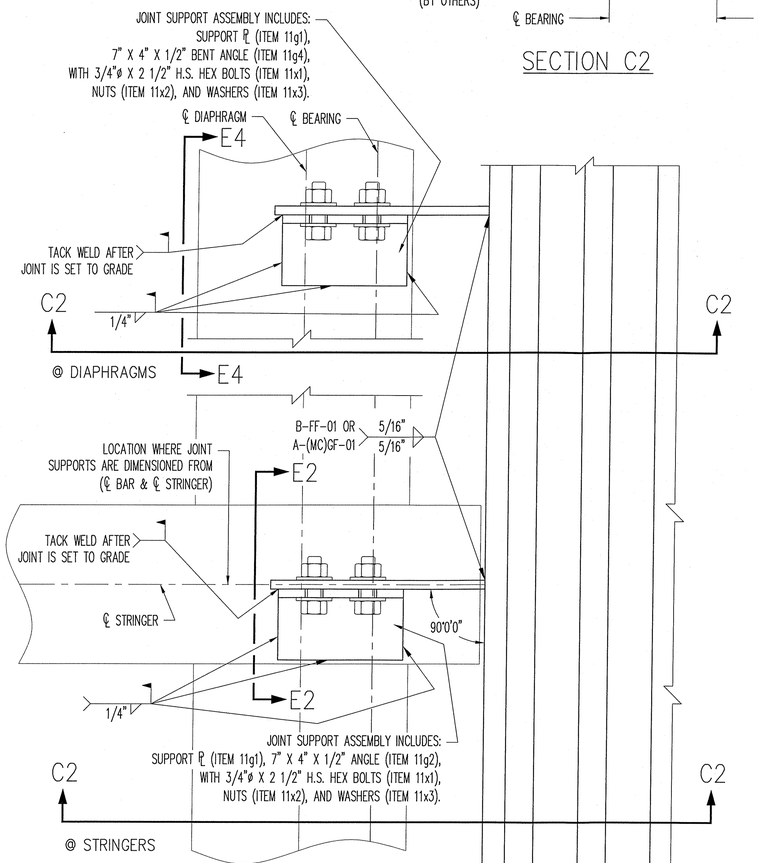

SECTION D2

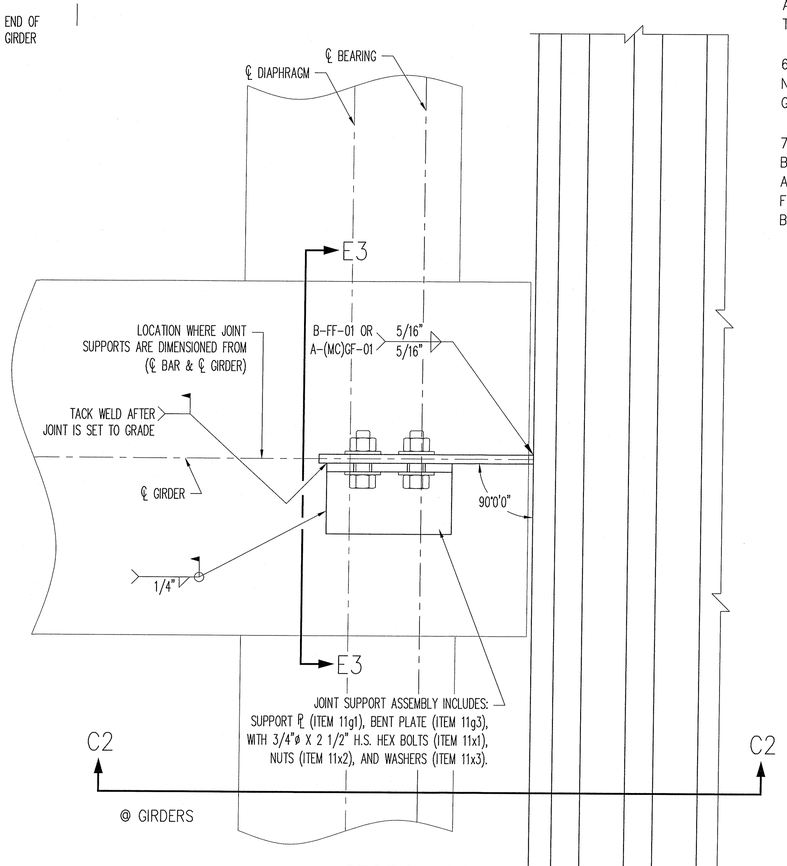

SECTION D3

REV.	DESCRIPTION	DATE	DET.	CKD.

D.S. BROWN
A GIBRALTAR INDUSTRIES COMPANY
THE D.S. BROWN COMPANY
300 E. CHERRY STREET
NORTH BALTIMORE, OHIO 45872
419.257.3561
FAX: 419.257.0332
WWW.DSBROWN.COM

LOCATION — I-24 OVER THE OHIO RIVER
STRUCTURE NO. — 064-0035
ROUTE — FAI ROUTE 24 (I-24)
SECTION — BSMART 2013-1
CONTRACT NO. — 78293 DISTRICT NO. — 9
P.O. NO. — 7838
DESIGNER — ILLINOIS DEPARTMENT OF TRANSPORTATION
CUSTOMER — HENNEGAN & ASSOCIATES (JOB NO. 06-0113)

ITEM	QUANTITY
–	–
–	–
–	–
–	–
–	–
–	–
–	–
–	–
–	–

DESCRIPTION:	SCALE:	DRAWN BY:	CHECKED BY:	DATE:	BRIDGE SHEET:
"D-240" SECTIONS & STANDARD DETAILS MASSAC COUNTY, ILLINOIS	N.T.S.	RES	TKE	6/13/13	11 OF 31
	PROJECT NUMBER	PRODUCT CODE	RELEASE	SHEET	
	40606	1021	1	11	

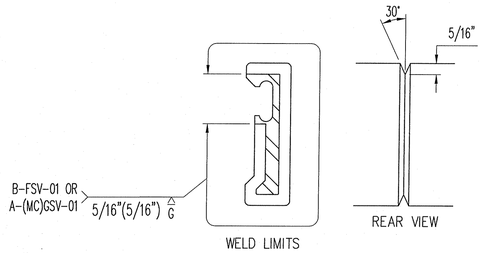

EDGE BEAM SHOP SPLICE DETAIL

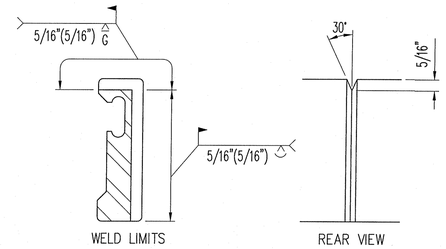

EDGE BEAM FIELD SPLICE DETAIL

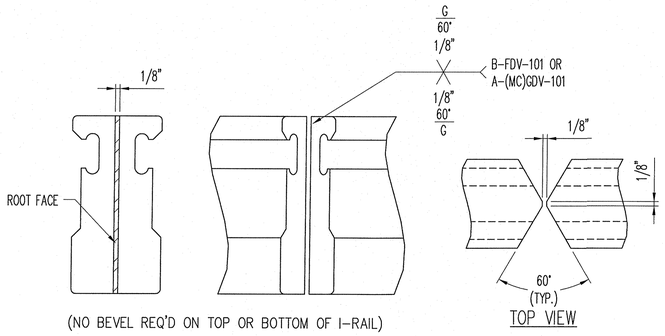

CENTER BEAM SHOP SPLICE DETAIL

COMPLETE PENETRATION WELD

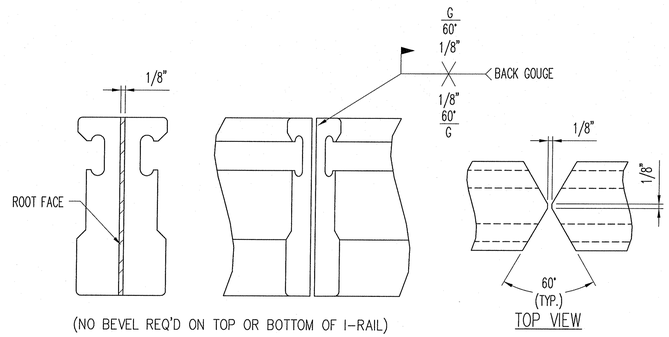

CENTER BEAM FIELD SPLICE DETAIL

COMPLETE PENETRATION WELD

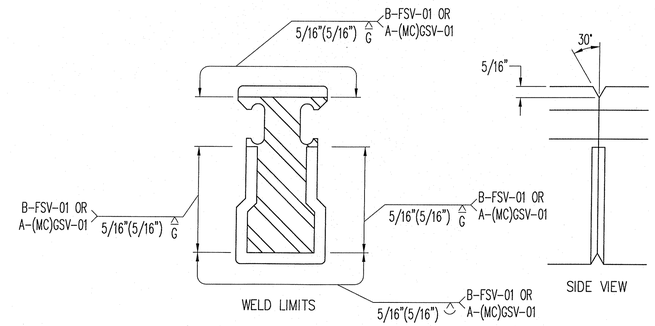

CENTER BEAM UPTURN SHOP SPLICE DETAIL

PARTIAL PENETRATION WELD (@ UPTURNS ONLY U.N.O.)

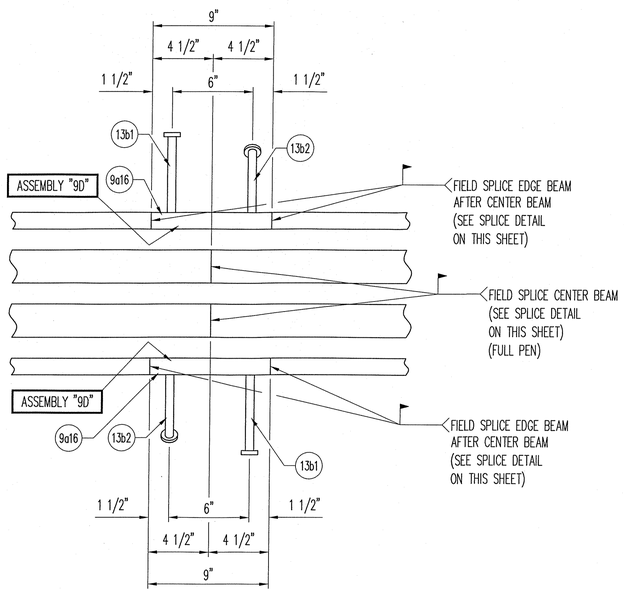

DETAIL F2

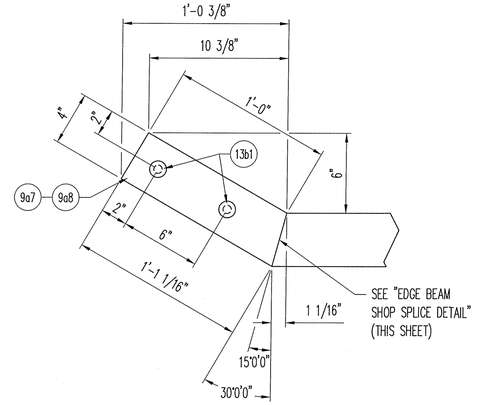

EDGE BEAM UPTURN DETAIL

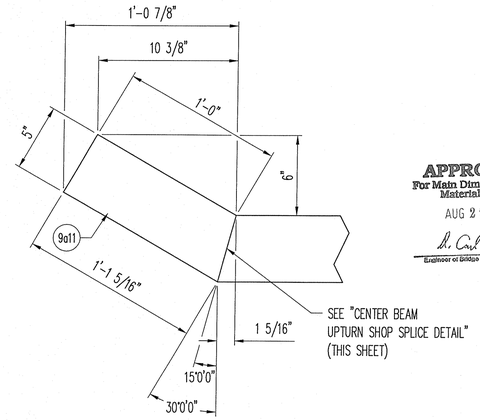

CENTER BEAM UPTURN DETAIL

APPROVED
For Main Dimensions and Materials Only
AUG 27 2013
Engineer of Bridge & Traffic Structures

REV.	DESCRIPTION	DATE	DET.	CKD.

D.S. BROWN
A GIBRALTAR INDUSTRIES COMPANY

THE D.S. BROWN COMPANY
300 E. CHERRY STREET
NORTH BALTIMORE, OHIO 45872
419.257.3561
FAX: 419.257.0332
WWW.DSBROWN.COM

LOCATION — I-24 OVER THE OHIO RIVER
STRUCTURE NO. — 064-0035
ROUTE — FAI ROUTE 24 (I-24)
SECTION — BSMART 2013-1
CONTRACT NO. — 78293 DISTRICT NO. — 9
P.O. NO. — 7838
DESIGNER — ILLINOIS DEPARTMENT OF TRANSPORTATION
CUSTOMER — HENNEGAN & ASSOCIATES (JOB NO. 06-0113)

ITEM	QUANTITY
–	–
–	–
–	–
–	–
–	–
–	–
–	–
–	–
–	–
–	–

DESCRIPTION: "D-240" STANDARD DETAILS
MASSAC COUNTY, ILLINOIS

SCALE:	DRAWN BY:	CHECKED BY:	DATE:	BRIDGE SHEET:
N.T.S.	RES	TKE	6/13/13	12 OF 31
PROJECT NUMBER	PRODUCT CODE	RELEASE	SHEET	
40606	1021	1	12	

GENERAL NOTES

MATERIAL AND WORKMANSHIP SHALL BE IN ACCORDANCE WITH THE ILLINOIS DEPARTMENT OF TRANSPORTATION "STANDARD SPECIFICATIONS FOR ROAD AND BRIDGE CONSTRUCTION", ADOPTED JANUARY 1, 2012, SPECIAL PROVISIONS, AND CONTRACT DOCUMENTS.

EDGE BEAMS, CENTER BEAMS, AND SUPPORT BARS SHALL BE AASHTO M270 GRADE 50 (ASTM–A572) OR GRADE 50W (ASTM–A588) STEEL.

SUPPORT BOXES SHALL BE ASTM–A500 GRADE B STEEL.

STAINLESS STEEL SLIDING SURFACES SHALL BE ASTM–A240, TYPE 304, WITH A 2b FINISH.

STUD ANCHORS SHALL BE ASTM–A108 STEEL AND AUTOMATICALLY END WELDED WITH COMPLETE FUSION.
REPAIR STUDS USING WELD PROCEDURE NO. A–SM–STUD–REP–01, B–FF–STUD–REP–01, OR A–(MC)GF–STUD–REP–01.

ALL STEEL SURFACES IN THE MODULAR EXPANSION JOINT ASSEMBLIES (EXCEPT STAINLESS STEEL) SHALL BE HOT–DIPPED GALVANIZED AFTER FABRICATION IN ACCORDANCE WITH AASHTO M111 (ASTM–A123).
ANY GALVANIZED COATING DAMAGED DURING FIELD WELDING OR FROM OTHER CAUSES MUST BE REPAIRED IN ACCORDANCE WITH ASTM A780.
DUE TO TANK LIMITATIONS, ASSEMBLIES MAY BE DIPPED IN SECTIONS AND SHOP SPLICED AFTER GALVANIZING.
REPAIR OF GALVANIZING SHALL BE IN ACCORDANCE WITH ASTM A780.

LIFTING DEVICES MAY BE WELDED TO PARTS FOR GALVANIZING IF NECESSARY.
WHEN THEIR USE IS COMPLETE, REMOVE AND GRIND FLUSH ALL CONNECTION LOCATIONS.
REPAIR GALVANIZING IN ACCORDANCE WITH ASTM A780.

MODULAR JOINT SHALL BE EQUIPPED WITH TEMPERATURE ADJUSTMENT DEVICES TO ALLOW FOR ADJUSTMENTS PER FIELD ENGINEERS RECOMMENDATIONS.

HOLES MUST BE DRILLED OR PUNCHED.

NEOPRENE STRIP SEAL SHALL BE CONTINUOUS AND FIELD INSTALLED WITH A LUBRICANT ADHESIVE.
FIELD INSTALL ONLY IN ASSEMBLY 1A DURING THE FIRST CONSTRUCTION STAGE.
REMAINDER OF SEAL SHALL BE ROLLED UP ON THE FIELD SPLICE END.
SEAL SHALL THEN BE FIELD INSTALLED WITH A LUBRICANT ADHESIVE IN SECOND STAGE AFTER FIELD WELDING IS COMPLETE.
NO FIELD SPLICES OF THE STRIP SEAL GLANDS SHALL BE PERMITTED.
CONTRACTOR SHALL PROTECT SEAL DURING THE 1ST STAGE OF CONSTRUCTION TO PREVENT DAMAGE PRIOR TO THE 2ND STAGE OF CONSTRUCTION.
SEAL SHALL ALSO BE PROTECTED AND CLEAR OF THE AREA TO BE FIELD WELDED.

ILDOT REQUIRES THE USE OF PRE–APPROVED STRIP SEAL GLAND.
NEOPRENE STRIP SEAL SHALL MEET THE REQUIREMENTS OF ARTICLE 1052.02(a) OF ILLINOIS DOT STANDARD SPECIFICATIONS.

LUBRICANT/ADHESIVE SHALL BE A ONE–PART, MOISTURE CURING, POLYURETHANE AND HYDROCARBON SOLVENT MIXTURE AS RECOMMENDED BY THE STRIP SEAL MANUFACTURER AND CONTAINING NOT LESS THAN 65% SOLIDS.

ALL STEEL SURFACES IN CONTACT WITH THE NEOPRENE SEAL SHALL BE CLEANED PRIOR TO THE INSTALLATION OF THE STRIP SEAL.

CARE SHALL BE TAKEN TO PREVENT DAMAGE DURING MOVING AND SHIPPING OF JOINT.

MODULAR JOINT SHALL FOLLOW ROADWAY SLOPE AND GRADE.

MODULAR JOINT SHALL BE MARKED SHOWING JOINT TYPE AND PROPER LOCATION.
MARKINGS SHALL BE VISIBLE AFTER JOINT HAS BEEN COMPLETELY INSTALLED.

THE MODULAR EXPANSION JOINT ASSEMBLIES SHALL BE INSPECTED BY D.S. BROWN QC DEPARTMENT AND BY AN ILLINOIS REPRESENTATIVE AS REQUIRED.

WELDING SHALL BE IN ACCORDANCE WITH AASHTO/AWS D1.5 BRIDGE WELDING CODE AND SHALL BE DONE BY CERTIFIED WELDERS.

MODULAR JOINT SHALL BE DESIGNED TO ACCOMMODATE FATIGUE LOADING, PER DESIGN CRITERIA FOR MODULAR BRIDGE EXPANSION JOINTS AS SPECIFIED IN NCHRP REPORT 402 & 467.

ALL FULL PENETRATION WELDS SHALL BE 100% UT.
ALL PARTIAL PENETRATION AND FILLET WELDS SHALL BE 10% MT.
ALL NDE SHALL BE PERFORMED BY IN–HOUSE PERSONNEL.

ANY TIGHTLY ADHERENT WELD SPATTER NEED NOT BE REMOVED IN COATING AREAS TO BE CAST IN CONCRETE.

REPAIR THERMAL CUT GOUGES EXCEEDING AWS BY USING WELD PROCEDURE B–F–REP–100 OR A–(MC)G–REP–100.

MB 5/8"ø X 3 1/2" SQHD A307 SPRING ACCESS PLATE BOLT (ITEM 10f2) MAY EITHER BE COATED WITH ZINC PLATING OR MECHANICAL GALVANIZING.

SUPPORT BAR BEARINGS SHALL BE FABRICATED WITH PTFE SLIDING SURFACES PER STD. SPEC. 1083.

RAIL LENGTHS AND ROADWAY SLOPES SHALL BE VERIFIED BY CONTRACTOR TO ENSURE ACCURACY OF THE EXPANSION JOINTS.
STAMPED APPROVED DRAWINGS ASSUME DRAWINGS HAVE BEEN REVIEWED BY CONTRACTOR.

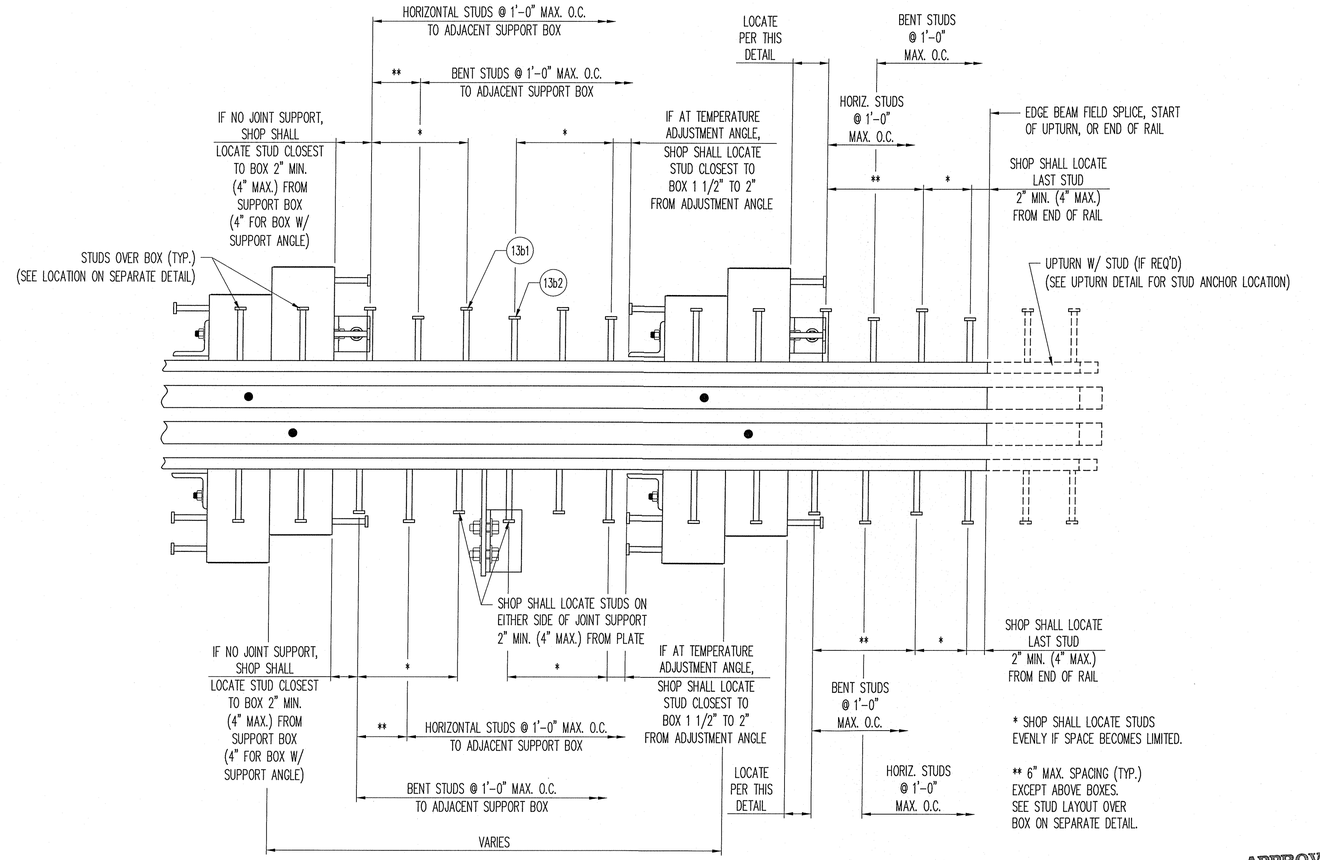

TYP. STUD LAYOUT SEQUENCE ALONG EDGE BEAM

IF INTERFERENCE OCCURS WITH A GIRDER SUPPORT PLATE, SHOP SHALL SHIFT STUD AS INDICATED ABOVE.

APPROVED
For Main Dimensions and Materials Only
AUG 27 2013
Engineer of Bridge & Traffic Structures

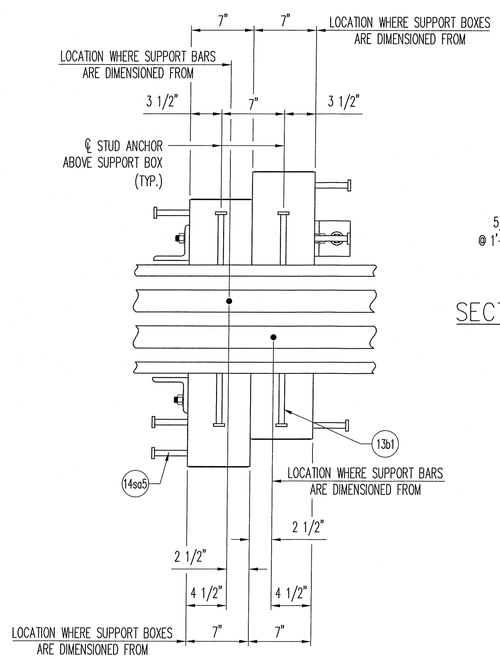

PLAN VIEW @ SUPPORT BOX

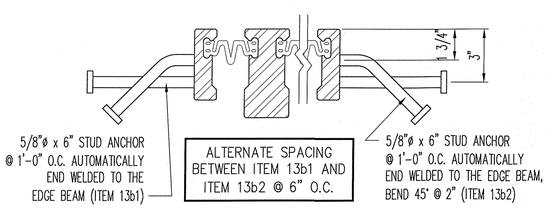

SECTION THRU "D–240" BETWEEN SUPPORT BOXES (EDGE BEAM ANCHORAGE)

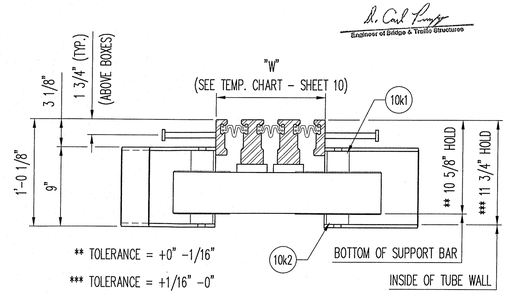

SECTION THRU "D–240" @ SUPPORT BOX

REV.	DESCRIPTION	DATE	DET.	CKD.

D.S. BROWN
A GIBRALTAR INDUSTRIES COMPANY

THE D.S. BROWN COMPANY
300 E. CHERRY STREET
NORTH BALTIMORE, OHIO 45872
419.257.3561
FAX: 419.257.0332
WWW.DSBROWN.COM

	ITEM	QUANTITY
LOCATION — I–24 OVER THE OHIO RIVER	–	–
STRUCTURE NO. — 064–0035	–	–
ROUTE — FAI ROUTE 24 (I–24)	–	–
SECTION — BSMART 2013–1	–	–
CONTRACT NO. — 78293 DISTRICT NO. — 9	–	–
P.O. NO. — 7838	–	–
DESIGNER — ILLINOIS DEPARTMENT OF TRANSPORTATION	–	–
CUSTOMER — HENNEGAN & ASSOCIATES (JOB NO. 06–0113)	–	–

DESCRIPTION:	SCALE:	DRAWN BY:	CHECKED BY:	DATE:	BRIDGE SHEET:
"D–240" SECTIONS & STANDARD DETAILS MASSAC COUNTY, ILLINOIS	N.T.S.	RES	TKE	6/13/13	13 OF 31
	PROJECT NUMBER	PRODUCT CODE	RELEASE	SHEET	
	40606	1021	1	13	

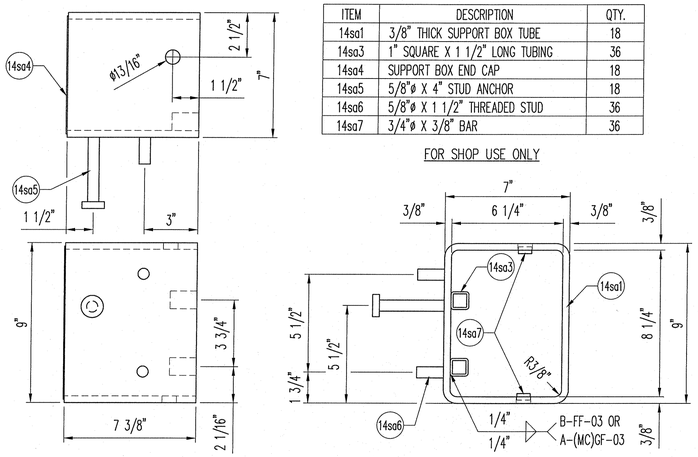

ITEM	DESCRIPTION	QTY.
14sa1	3/8" THICK SUPPORT BOX TUBE	18
14sa3	1" SQUARE X 1 1/2" LONG TUBING	36
14sa4	SUPPORT BOX END CAP	18
14sa5	5/8"ø X 4" STUD ANCHOR	18
14sa6	5/8"ø X 1 1/2" THREADED STUD	36
14sa7	3/4"ø X 3/8" BAR	36

FOR SHOP USE ONLY

"D-240" SUPPORT BOX DETAIL "14A"
(SHORT LENGTH)
(18) REQUIRED

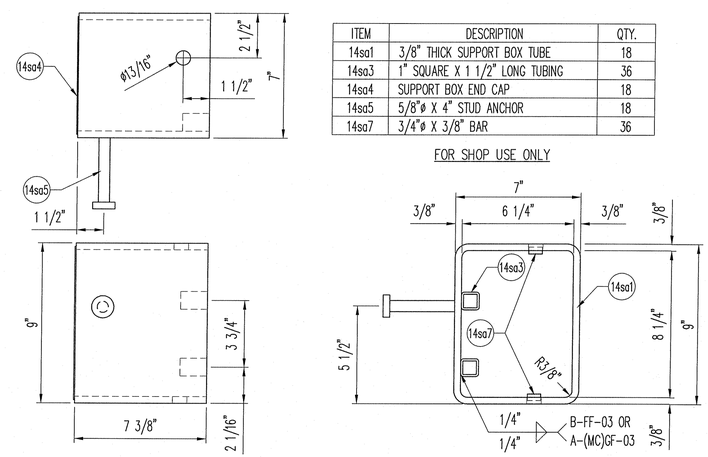

ITEM	DESCRIPTION	QTY.
14sa1	3/8" THICK SUPPORT BOX TUBE	18
14sa3	1" SQUARE X 1 1/2" LONG TUBING	36
14sa4	SUPPORT BOX END CAP	18
14sa5	5/8"ø X 4" STUD ANCHOR	18
14sa7	3/4"ø X 3/8" BAR	36

FOR SHOP USE ONLY

"D-240" SUPPORT BOX DETAIL "14B"
(SHORT LENGTH)
(18) REQUIRED

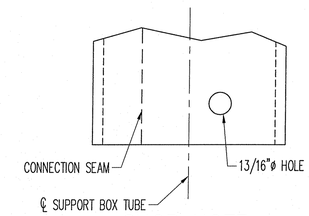

SHOP NOTE:
WHEN DRILLING 13/16"ø HOLES INTO SUPPORT BOX TUBE, BE SURE THE SEAM OF THE TUBE IS ON THE OPPOSITE SIDE IN RELATIONSHIP TO THE ℄ OF BOX.

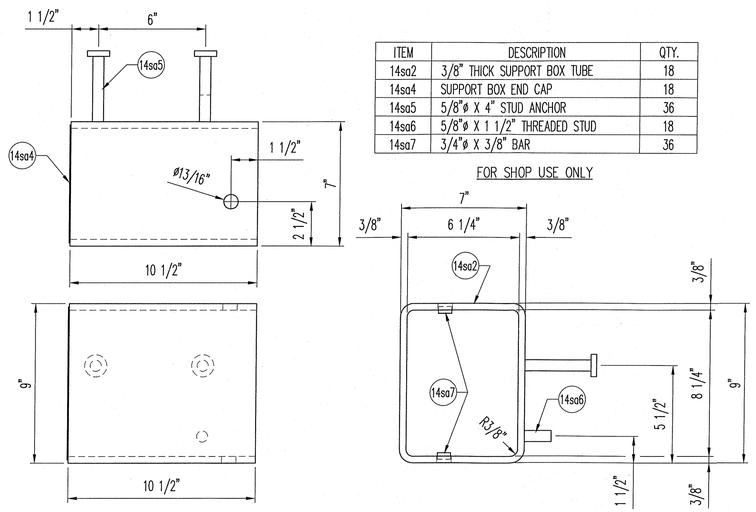

ITEM	DESCRIPTION	QTY.
14sa2	3/8" THICK SUPPORT BOX TUBE	18
14sa4	SUPPORT BOX END CAP	18
14sa5	5/8"ø X 4" STUD ANCHOR	36
14sa6	5/8"ø X 1 1/2" THREADED STUD	18
14sa7	3/4"ø X 3/8" BAR	36

FOR SHOP USE ONLY

"D-240" SUPPORT BOX DETAIL "14C"
(LONG LENGTH)
(18) REQUIRED

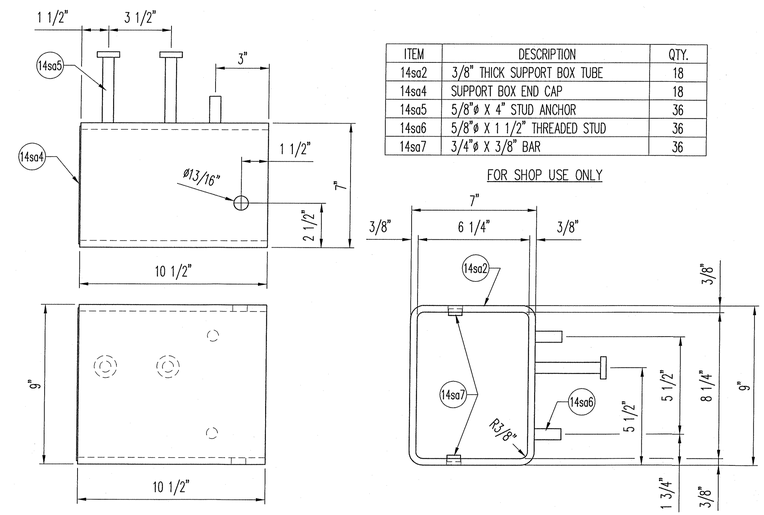

ITEM	DESCRIPTION	QTY.
14sa2	3/8" THICK SUPPORT BOX TUBE	18
14sa4	SUPPORT BOX END CAP	18
14sa5	5/8"ø X 4" STUD ANCHOR	36
14sa6	5/8"ø X 1 1/2" THREADED STUD	36
14sa7	3/4"ø X 3/8" BAR	36

FOR SHOP USE ONLY

"D-240" SUPPORT BOX DETAIL "14D"
(LONG LENGTH)
(18) REQUIRED

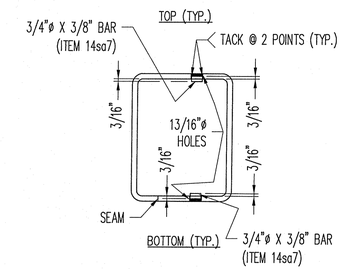

BOX DETAILS
(W/ RUBBER SPRINGS & BEARINGS)

APPROVED
For Main Dimensions and Materials Only
AUG 27 2013
Engineer of Bridge & Traffic Structures

REV.	DESCRIPTION	DATE	DET.	CKD.

D.S. BROWN
A GIBRALTAR INDUSTRIES COMPANY

THE D.S. BROWN COMPANY
300 E. CHERRY STREET
NORTH BALTIMORE, OHIO 45872
419.257.3561
FAX: 419.257.0332
WWW.DSBROWN.COM

LOCATION — I-24 OVER THE OHIO RIVER
STRUCTURE NO. — 064-0035
ROUTE — FAI ROUTE 24 (I-24)
SECTION — BSMART 2013-1
CONTRACT NO. — 78293 DISTRICT NO. — 9
P.O. NO. — 7838
DESIGNER — ILLINOIS DEPARTMENT OF TRANSPORTATION
CUSTOMER — HENNEGAN & ASSOCIATES (JOB NO. 06-0113)

ITEM	QUANTITY
–	–
–	–
–	–
–	–
–	–
–	–
–	–
–	–
–	–

DESCRIPTION: "D-240" SUPPORT BOX DETAILS
MASSAC COUNTY, ILLINOIS

SCALE:	DRAWN BY:	CHECKED BY:	DATE:	BRIDGE SHEET:
N.T.S.	RES	TKE	6/13/13	14 OF 31

PROJECT NUMBER	PRODUCT CODE	RELEASE	SHEET
40606	1021	1	14

ITEM	DESCRIPTION	QUAN.
15sb1	1 3/4" X 5 17/32" X 1'-11 1/2" BAR	36
15sb2	16GA. X 2 3/8" X 6 1/4" S.S. SHIM	72
15sb3	16GA. X 2 3/8" X 9 5/8" S.S. SHIM	72
15sb4	5/8" X 2 1/2" X 2 7/8" FLAT BAR	72

NOTE: STAINLESS SHIMS NOT SHOWN IN RIGHT HAND VIEW FOR CLARITY PURPOSES.

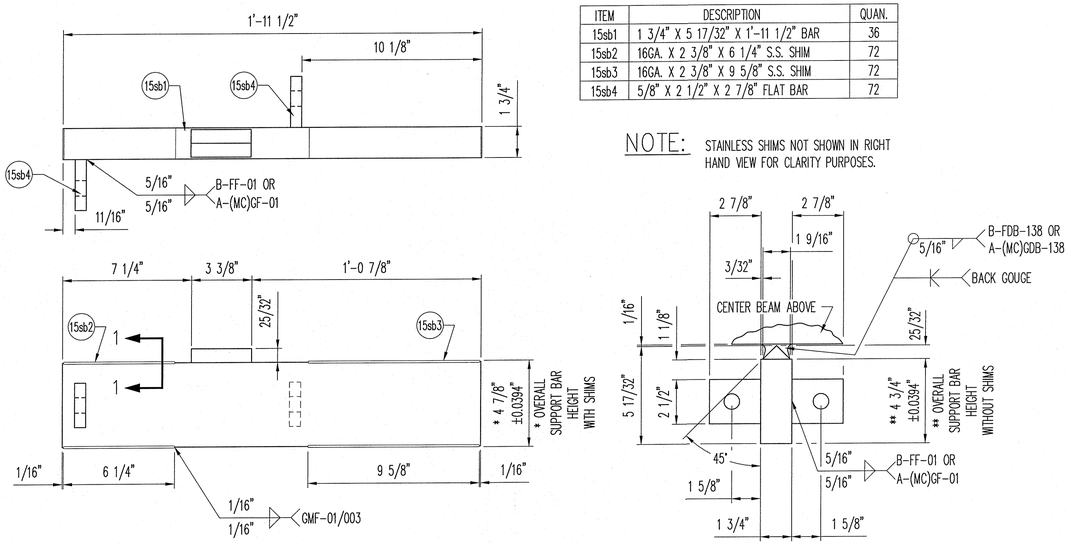

"D-240" SUPPORT BAR DETAIL

(36) REQUIRED

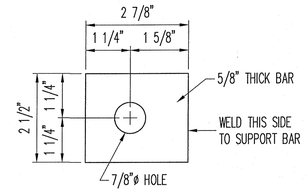

ITEM NO. 15sb4

(72) REQ'D.

SPRING STOP DETAIL

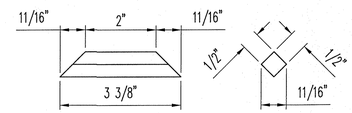

ITEM NO. 15sb5

(36) REQ'D.

OPTIONAL RIDER BAR DETAIL

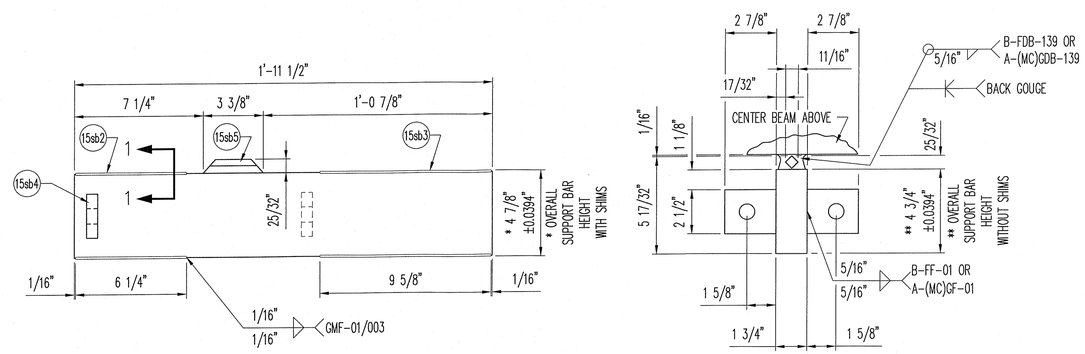

OPTIONAL "D-240" SUPPORT BAR DETAIL (WITH RIDER BAR)

(IN LIEU OF MACHINED SUPPORT BAR)

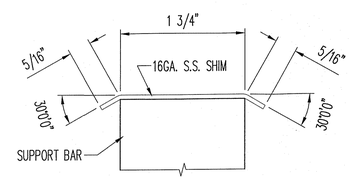

SECTION 1-1

APPROVED
For Main Dimensions and Materials Only
AUG 27 2013
Engineer of Bridge & Traffic Structures

REV.	DESCRIPTION	DATE	DET.	CKD.

D.S. BROWN
A GIBRALTAR INDUSTRIES COMPANY

THE D.S. BROWN COMPANY
300 E. CHERRY STREET
NORTH BALTIMORE, OHIO 45872
419.257.3561
FAX: 419.257.0332
WWW.DSBROWN.COM

LOCATION — I-24 OVER THE OHIO RIVER
STRUCTURE NO. — 064-0035
ROUTE — FAI ROUTE 24 (I-24)
SECTION — BSMART 2013-1
CONTRACT NO. — 78293 DISTRICT NO. — 9
P.O. NO. — 7838
DESIGNER — ILLINOIS DEPARTMENT OF TRANSPORTATION
CUSTOMER — HENNEGAN & ASSOCIATES (JOB NO. 06-0113)

ITEM	QUANTITY
–	–
–	–
–	–
–	–
–	–
–	–
–	–
–	–
–	–

DESCRIPTION: "D-240" SUPPORT BAR DETAILS
MASSAC COUNTY, ILLINOIS

SCALE:	DRAWN BY:	CHECKED BY:	DATE:	BRIDGE SHEET:
N.T.S.	RES	TKE	6/13/13	15 OF 31

PROJECT NUMBER	PRODUCT CODE	RELEASE	SHEET
40606	1021	1	15

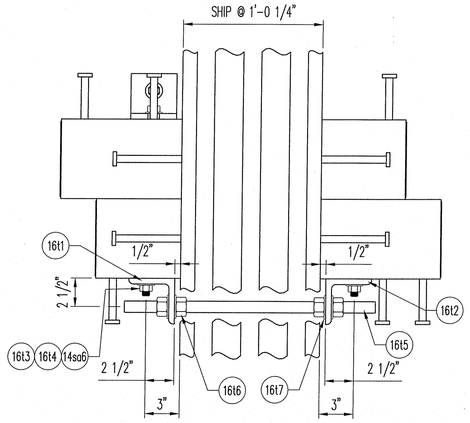

SUPPORT BOX PLAN VIEW W/ TEMPERATURE ADJUSTMENT DEVICE

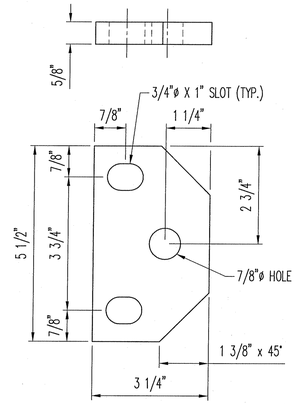

ITEM NO. 10f1
(36) REQ'D.

SPRING ACCESS PLATE DETAIL

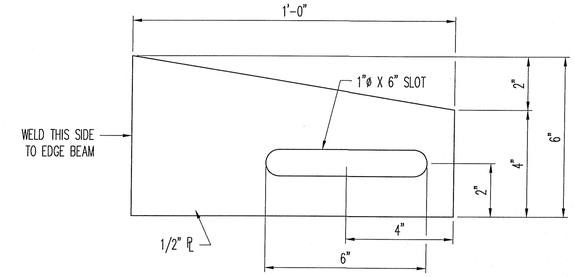

ITEM NO. 11g1
(13) REQ'D.

JOINT SUPPORT PLATE DETAIL
(LOCATED ON SPAN SIDE – SEE SHEET 9 FOR LOCATIONS)

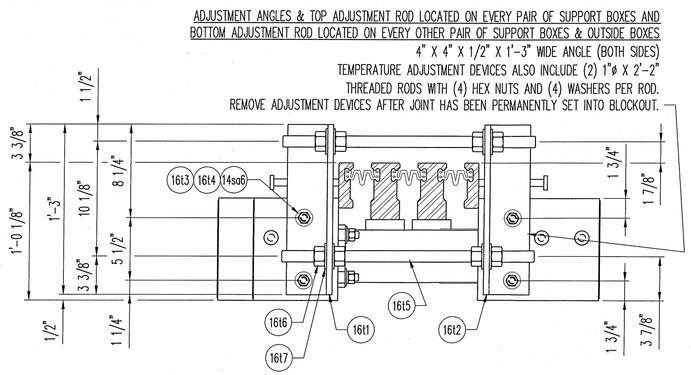

"D-240" TEMPORARY ADJUSTMENT DETAIL
(SEE JOINT PLAN VIEW ON SHEET 9 FOR LOCATIONS)

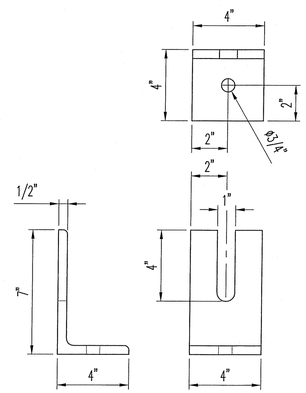

JOINT SUPPORT ANGLE DETAIL
ASSEMBLY 10GA
ITEM NO. 10g1
(LOCATED AT SUPPORT BOXES)
(18) REQ'D.

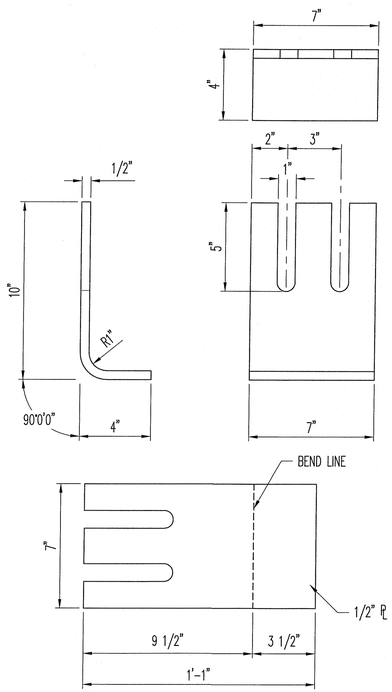

JOINT SUPPORT PLATE DETAIL
ASSEMBLY 11GB
ITEM NO. 11g3
(LOCATED AT GIRDERS)
(2) REQ'D.

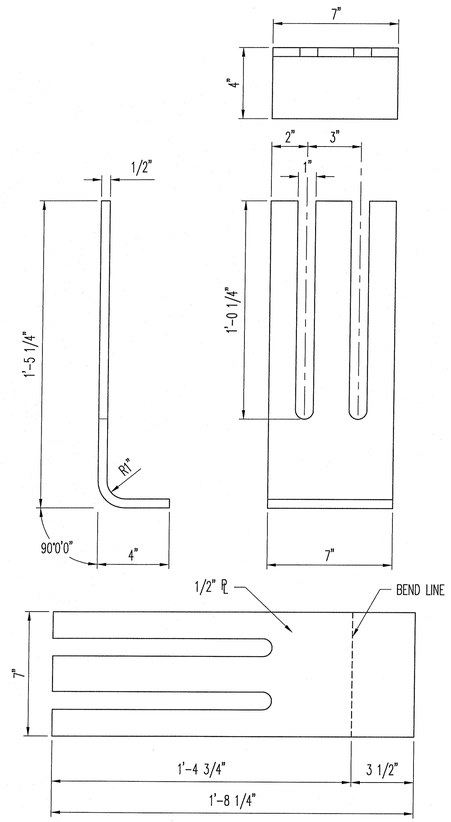

JOINT SUPPORT PLATE DETAIL
ASSEMBLY 11GC
ITEM NO. 11g4
(LOCATED AT DIAPHRAGMS)
(6) REQ'D.

APPROVED
For Main Dimensions and Materials Only
AUG 27 2013
Engineer of Bridge & Traffic Structures

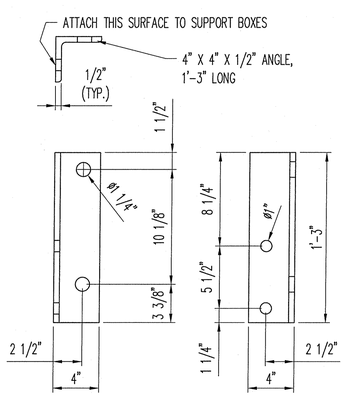

ITEM NO. 16t1
(18) REQ'D.

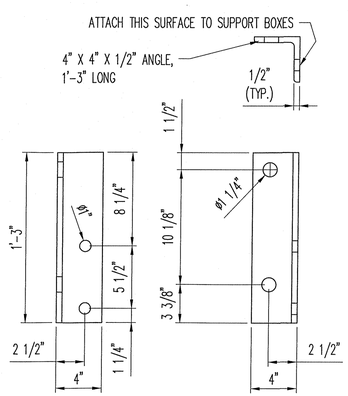

ITEM NO. 16t2
(18) REQ'D.

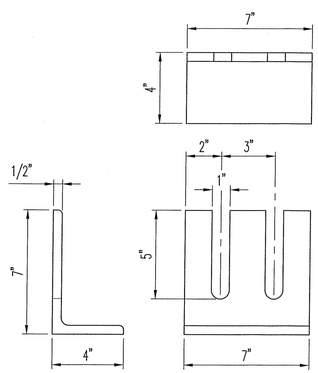

JOINT SUPPORT ANGLE DETAIL
ASSEMBLY 11GA
ITEM NO. 11g2
(LOCATED AT STRINGERS)
(5) REQ'D.

REV.	DESCRIPTION	DATE	DET.	CKD.

D.S. BROWN
A GIBRALTAR INDUSTRIES COMPANY

THE D.S. BROWN COMPANY
300 E. CHERRY STREET
NORTH BALTIMORE, OHIO 45872
419.257.3561
FAX: 419.257.0332
WWW.DSBROWN.COM

LOCATION — I-24 OVER THE OHIO RIVER
STRUCTURE NO. — 064-0035
ROUTE — FAI ROUTE 24 (I-24)
SECTION — BSMART 2013-1
CONTRACT NO. — 78293 DISTRICT NO. — 9
P.O. NO. — 7838
DESIGNER — ILLINOIS DEPARTMENT OF TRANSPORTATION
CUSTOMER — HENNEGAN & ASSOCIATES (JOB NO. 06-0113)

ITEM	QUANTITY
–	–
–	–
–	–
–	–
–	–
–	–
–	–
–	–
–	–
–	–

DESCRIPTION: "D-240" STANDARD DETAILS
MASSAC COUNTY, ILLINOIS

SCALE:	DRAWN BY:	CHECKED BY:	DATE:	BRIDGE SHEET:
N.T.S.	RES	TKE	6/13/13	16 OF 31
PROJECT NUMBER	PRODUCT CODE	RELEASE	SHEET	
40606	1021	1	16	

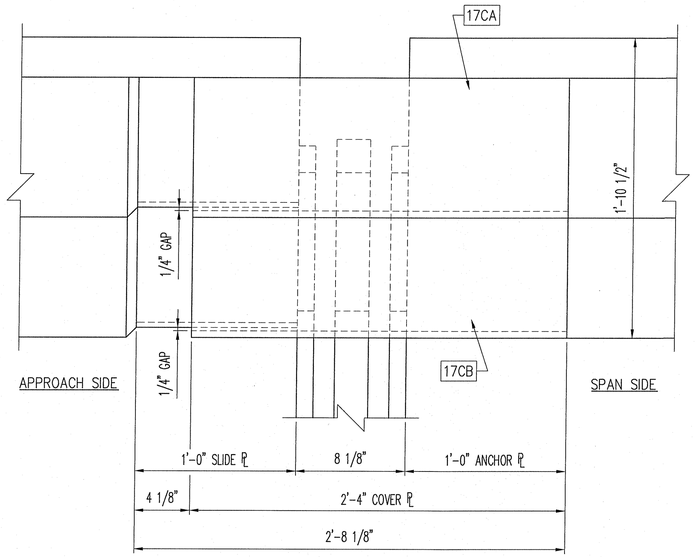

COVER PLATE PLAN VIEW @ PARAPET

COVER PLATE ASSEMBLIES 17CA & 17CB
LOCATED AT CELL A (EAST PARAPET)
DIMENSIONS SHOWN ARE AT MID. TEMP. (50°F)
(STUD ANCHORS & HARDWARE NOT SHOWN FOR CLARITY)

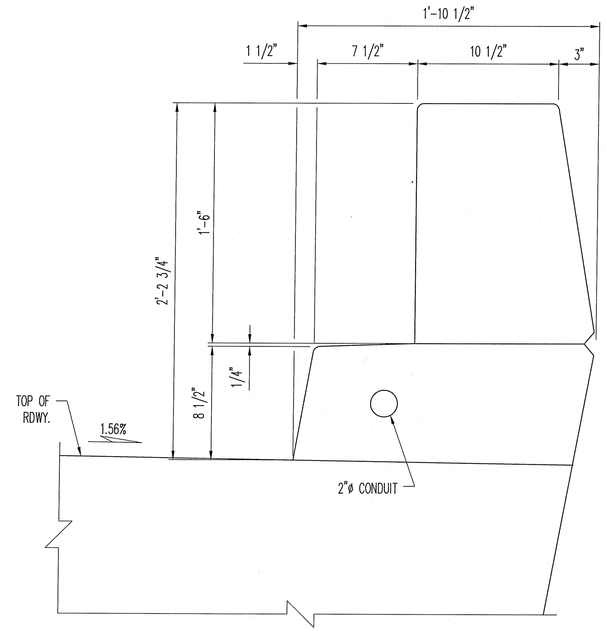

SECTION 1-1

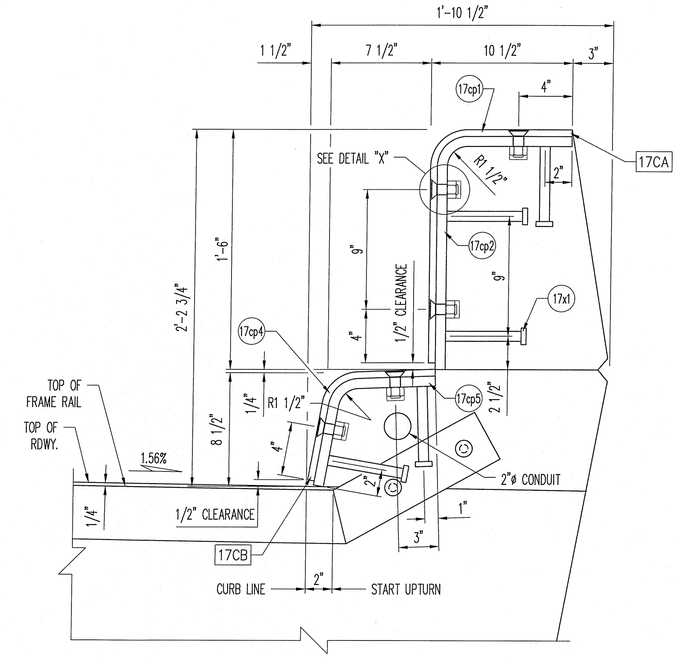

SECTION 2-2

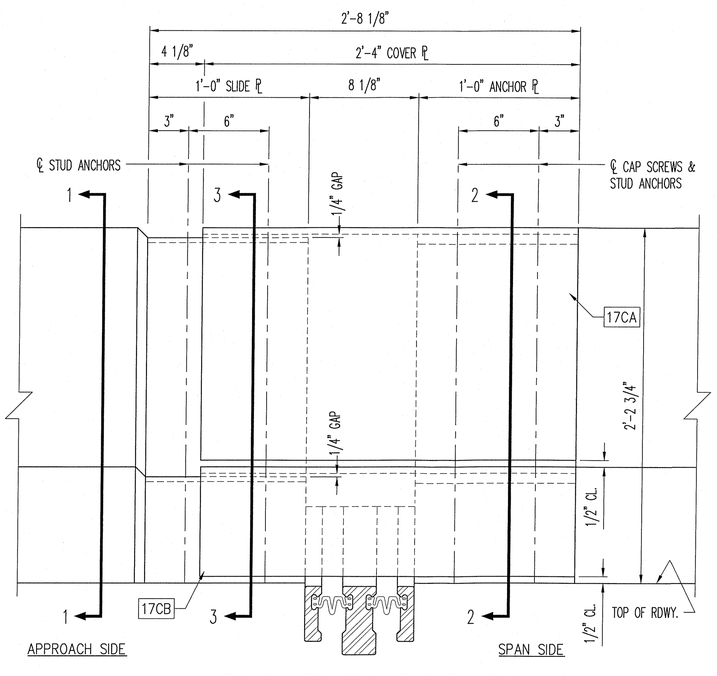

COVER PLATE FRONT ELEVATION

DIMENSIONS SHOWN ARE AT MID. TEMP. (50°F)
(STUD ANCHORS & HARDWARE NOT SHOWN FOR CLARITY)

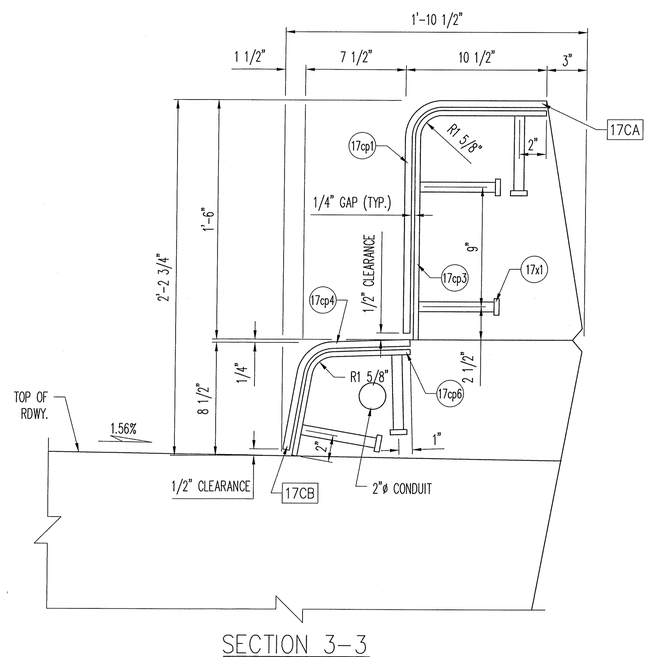

SECTION 3-3

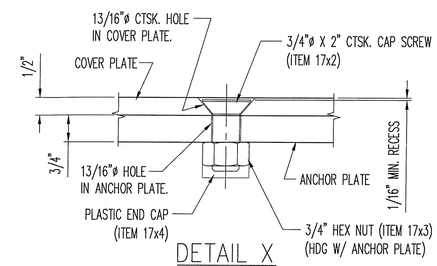

DETAIL X

APPROVED
For Main Dimensions and Materials Only
AUG 27 2013
Engineer of Bridge & Traffic Structures

COVER PLATE NOTES

ALL PLATES SHALL BE ASTM-A36 STEEL AND GALVANIZED IN ACCORDANCE WITH ASTM-A123. (AFTER FABRICATION)

COVER PLATES SHALL BE MOUNTED USING 3/4"ø X 2" CTSK. CAP SCREWS (ITEM 17x2) W/ 3/4"ø HEX NUTS (TACK WELDED TO ANCHOR PLATE) (ITEM 17x3).

A PLASTIC END CAP SHALL BE UTILIZED ON BACK SIDE OF NUT TO PREVENT CONCRETE FROM ENTERING THREADS (ITEMS 17x4).

ANCHOR PLATE AND SLIDE PLATE ASSEMBLIES SHALL BE MOUNTED USING 3/4"ø X 6" LONG STUD ANCHORS (ITEM 17x1).

COVER PLATES SHALL BE MOUNTED ON SPAN SIDE OF JOINT.

ALL HOLES MUST BE DRILLED OR PUNCHED.

SHOP NOTES:

- SEE PLATE BEND DETAILS ON SHEET 18
- SEE COVER PLATE BILL OF MATERIALS ON SHEET 31

REV.	DESCRIPTION	DATE	DET.	CKD.

D.S. BROWN
A GIBRALTAR INDUSTRIES COMPANY
THE D.S. BROWN COMPANY
300 E. CHERRY STREET
NORTH BALTIMORE, OHIO 45872
419.257.3561
FAX: 419.257.0332
WWW.DSBROWN.COM

LOCATION — I-24 OVER THE OHIO RIVER
STRUCTURE NO. — 064-0035
ROUTE — FAI ROUTE 24 (I-24)
SECTION — BSMART 2013-1
CONTRACT NO. — 78293 DISTRICT NO. — 9
P.O. NO. — 7838
DESIGNER — ILLINOIS DEPARTMENT OF TRANSPORTATION
CUSTOMER — HENNEGAN & ASSOCIATES (JOB NO. 06-0113)

ITEM	QUANTITY
–	–
–	–
–	–
–	–
–	–
–	–
–	–
–	–
–	–
–	–

DESCRIPTION:	SCALE:	DRAWN BY:	CHECKED BY:	DATE:	BRIDGE SHEET:
COVER PLATE DETAILS MASSAC COUNTY, ILLINOIS	N.T.S.	RES	TKE	6/13/13	17 OF 31
	PROJECT NUMBER: 40606	PRODUCT CODE: 1021	RELEASE: 1	SHEET: 17	

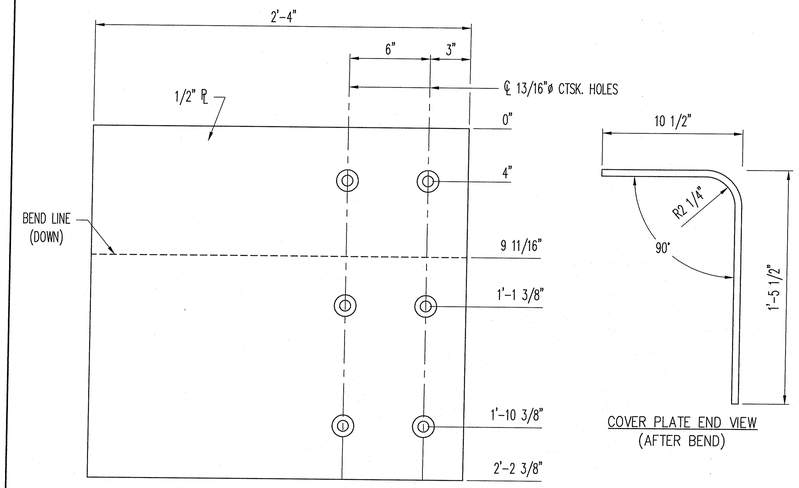

ITEM NO. 17cp1
(1) REQ'D.

UPPER CURB COVER PLATE

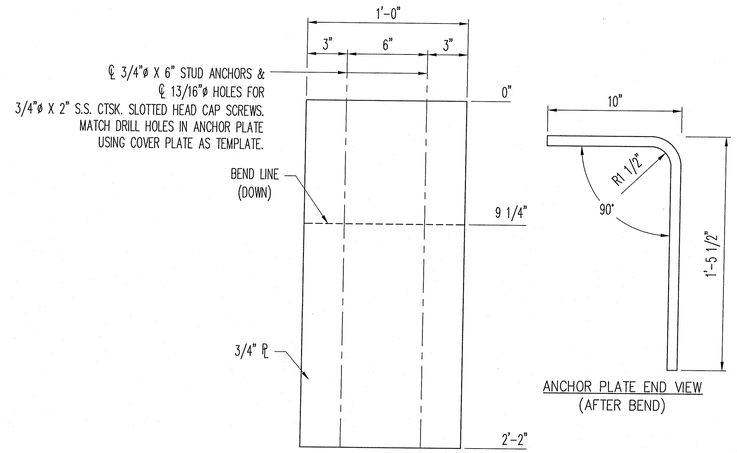

ITEM NO. 17cp2
(1) REQ'D.

UPPER CURB ANCHOR PLATE

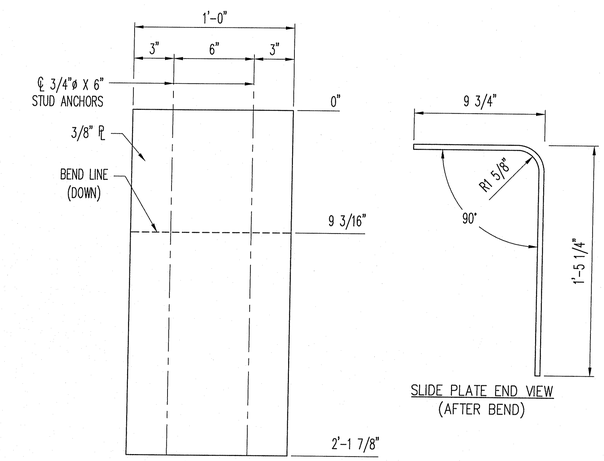

ITEM NO. 17cp3
(1) REQ'D.

UPPER CURB SLIDE PLATE

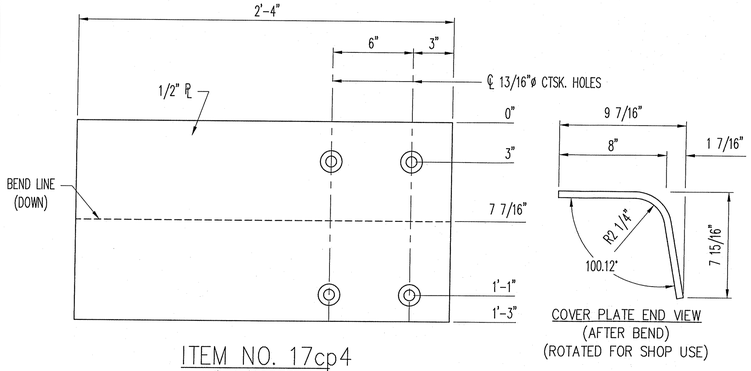

ITEM NO. 17cp4
(1) REQ'D.

LOWER CURB COVER PLATE

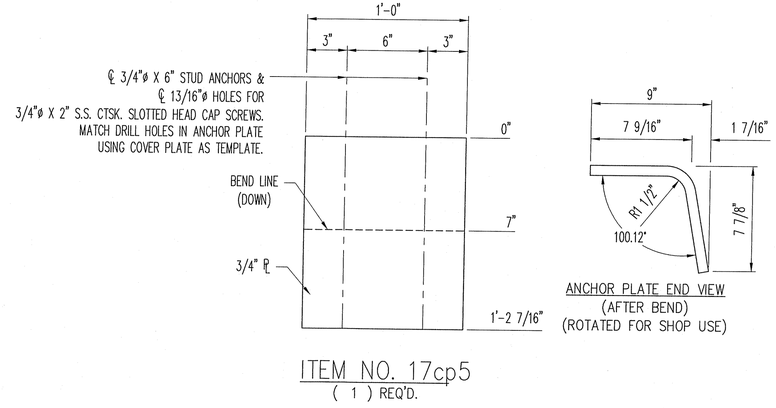

ITEM NO. 17cp5
(1) REQ'D.

LOWER CURB ANCHOR PLATE

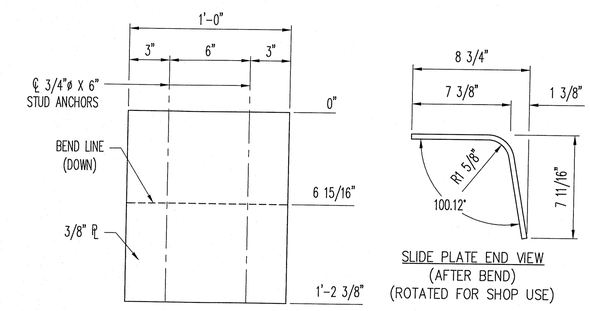

ITEM NO. 17cp6
(1) REQ'D.

LOWER CURB SLIDE PLATE

APPROVED
For Main Dimensions and Materials Only
AUG 27 2013
Engineer of Bridge & Traffic Structures

SHOP NOTES:

- SEE PARAPET COVER PLATE DETAILS ON SHEET 17
- SEE COVER PLATE NOTES ON SHEET 17
- SEE COVER PLATE BILL OF MATERIALS ON SHEET 31

REV.	DESCRIPTION	DATE	DET.	CKD.

D.S. BROWN
A GIBRALTAR INDUSTRIES COMPANY
THE D.S. BROWN COMPANY
300 E. CHERRY STREET
NORTH BALTIMORE, OHIO 45872
419.257.3561
FAX: 419.257.0332
WWW.DSBROWN.COM

LOCATION — I-24 OVER THE OHIO RIVER
STRUCTURE NO. — 064-0035
ROUTE — FAI ROUTE 24 (I-24)
SECTION — BSMART 2013-1
CONTRACT NO. — 78293 DISTRICT NO. — 9
P.O. NO. — 7838
DESIGNER — ILLINOIS DEPARTMENT OF TRANSPORTATION
CUSTOMER — HENNEGAN & ASSOCIATES (JOB NO. 06-0113)

ITEM	QUANTITY
–	–
–	–
–	–
–	–
–	–
–	–
–	–
–	–
–	–

DESCRIPTION: COVER PLATE DETAILS
MASSAC COUNTY, ILLINOIS

SCALE:	DRAWN BY:	CHECKED BY:	DATE:	BRIDGE SHEET:
N.T.S.	RES	TKE	6/13/13	18 OF 31
PROJECT NUMBER	PRODUCT CODE	RELEASE	SHEET	
40606	1021	1	18	

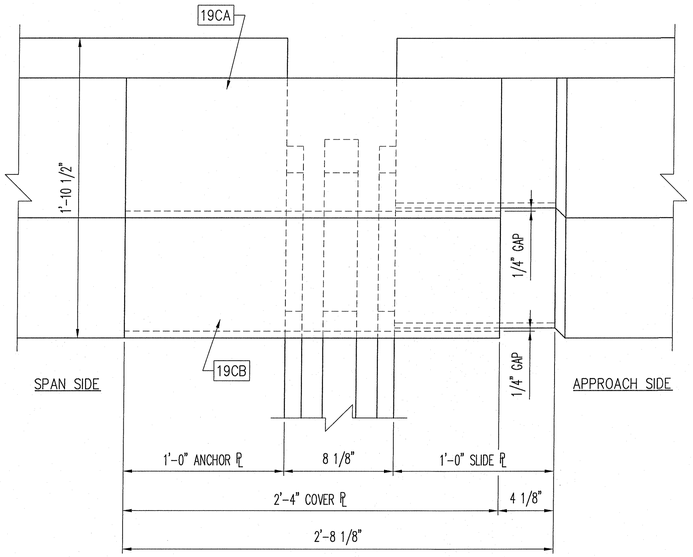

COVER PLATE PLAN VIEW @ PARAPET

COVER PLATE ASSEMBLIES 19CA & 19CB
LOCATED AT CELL A (WEST PARAPET)
DIMENSIONS SHOWN ARE AT MID. TEMP. (50°F)
(STUD ANCHORS & HARDWARE NOT SHOWN FOR CLARITY)

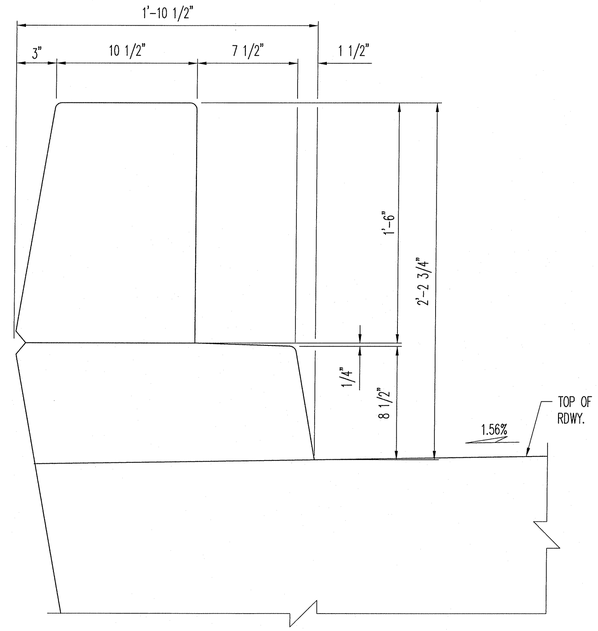

SECTION 1-1

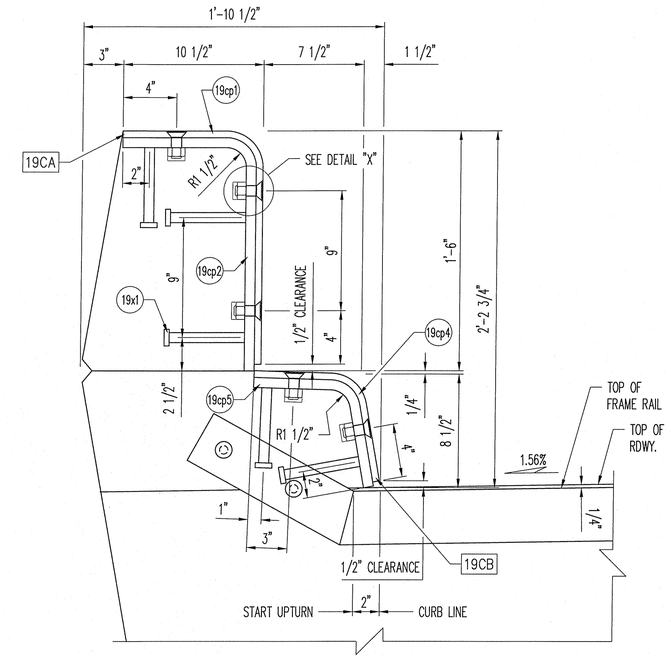

SECTION 2-2

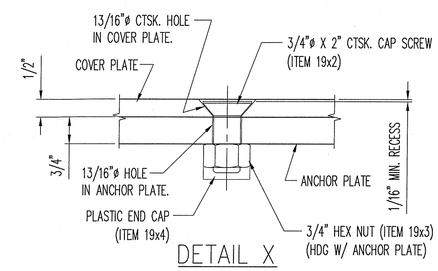

DETAIL X

APPROVED
For Main Dimensions and Materials Only
AUG 27 2013
Engineer of Bridge & Traffic Structures

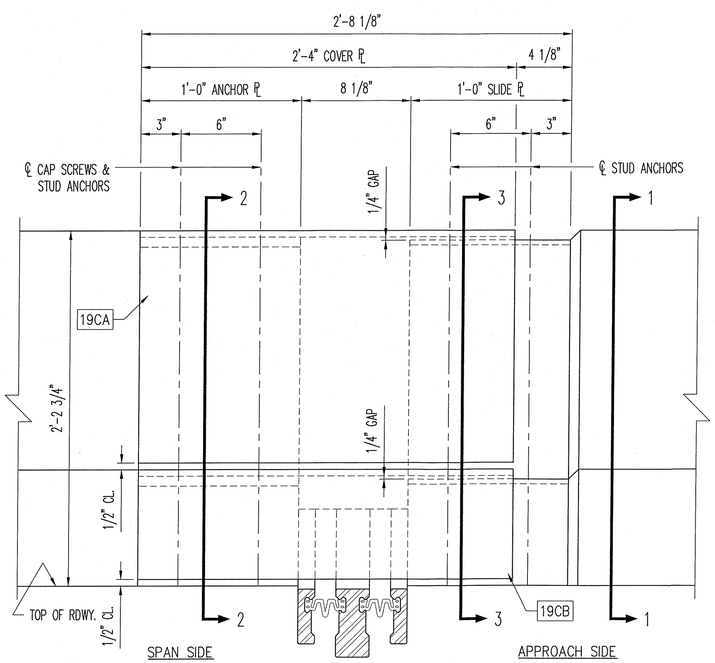

COVER PLATE FRONT ELEVATION

DIMENSIONS SHOWN ARE AT MID. TEMP. (50°F)
(STUD ANCHORS & HARDWARE NOT SHOWN FOR CLARITY)

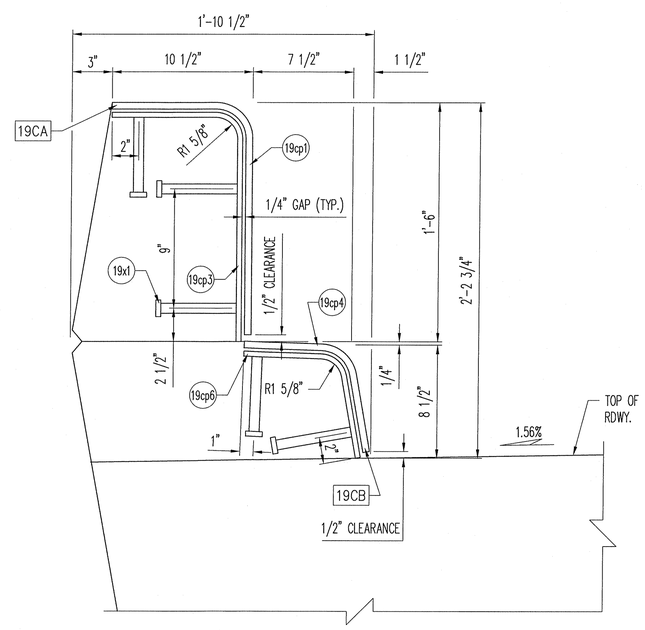

SECTION 3-3

SHOP NOTES:

- SEE PLATE BEND DETAILS ON SHEET 20
- SEE COVER PLATE BILL OF MATERIALS ON SHEET 31

COVER PLATE NOTES

ALL PLATES SHALL BE ASTM-A36 STEEL AND GALVANIZED IN ACCORDANCE WITH ASTM-A123. (AFTER FABRICATION)

COVER PLATES SHALL BE MOUNTED USING 3/4"ø X 2" CTSK. CAP SCREWS (ITEM 19x2) W/ 3/4"ø HEX NUTS (TACK WELDED TO ANCHOR PLATE) (ITEM 19x3).

A PLASTIC END CAP SHALL BE UTILIZED ON BACK SIDE OF NUT TO PREVENT CONCRETE FROM ENTERING THREADS (ITEMS 19x4).

ANCHOR PLATE AND SLIDE PLATE ASSEMBLIES SHALL BE MOUNTED USING 3/4"ø X 6" LONG STUD ANCHORS (ITEM 19x1).

COVER PLATES SHALL BE MOUNTED ON SPAN SIDE OF JOINT.

ALL HOLES MUST BE DRILLED OR PUNCHED.

REV.	DESCRIPTION	DATE	DET.	CKD.

D.S. BROWN
A GIBRALTAR INDUSTRIES COMPANY
THE D.S. BROWN COMPANY
300 E. CHERRY STREET
NORTH BALTIMORE, OHIO 45872
419.257.3561
FAX: 419.257.0332
WWW.DSBROWN.COM

LOCATION — I-24 OVER THE OHIO RIVER
STRUCTURE NO. — 064-0035
ROUTE — FAI ROUTE 24 (I-24)
SECTION — BSMART 2013-1
CONTRACT NO. — 78293 DISTRICT NO. — 9
P.O. NO. — 7838
DESIGNER — ILLINOIS DEPARTMENT OF TRANSPORTATION
CUSTOMER — HENNEGAN & ASSOCIATES (JOB NO. 06-0113)

ITEM	QUANTITY
–	–
–	–
–	–
–	–
–	–
–	–
–	–
–	–
–	–

DESCRIPTION:	SCALE:	DRAWN BY:	CHECKED BY:	DATE:	BRIDGE SHEET:
COVER PLATE DETAILS MASSAC COUNTY, ILLINOIS	N.T.S.	RES	TKE	6/13/13	19 OF 31
	PROJECT NUMBER 40606	PRODUCT CODE 1021	RELEASE 1	SHEET 19	

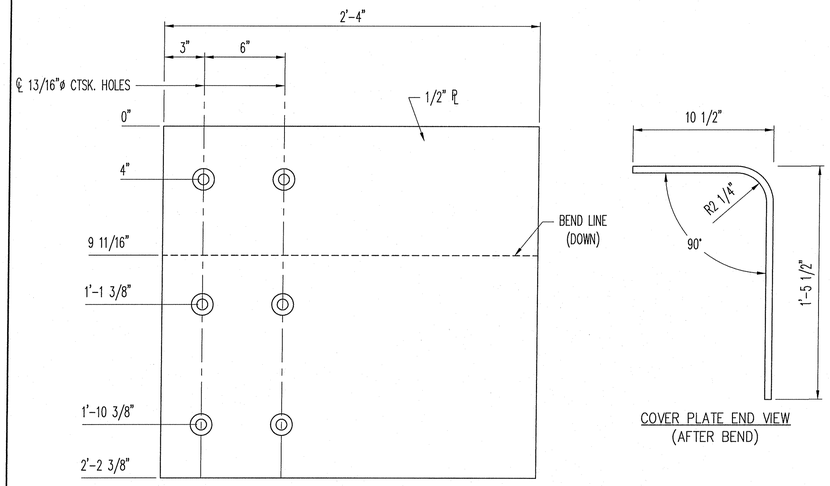

ITEM NO. 19cp1
(1) REQ'D.

UPPER CURB COVER PLATE

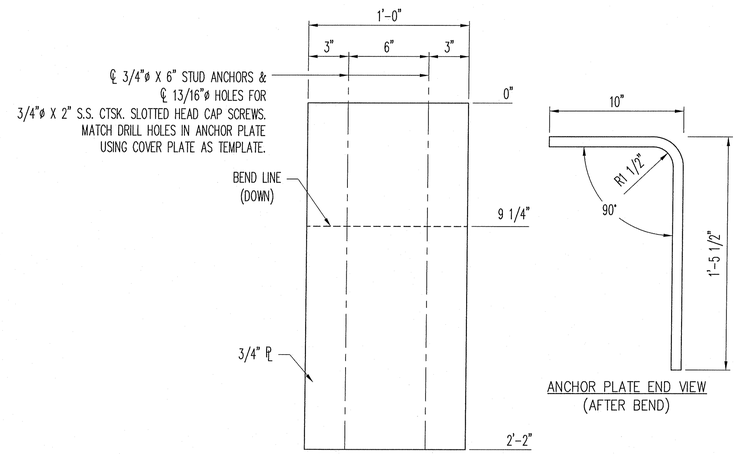

ITEM NO. 19cp2
(1) REQ'D.

UPPER CURB ANCHOR PLATE

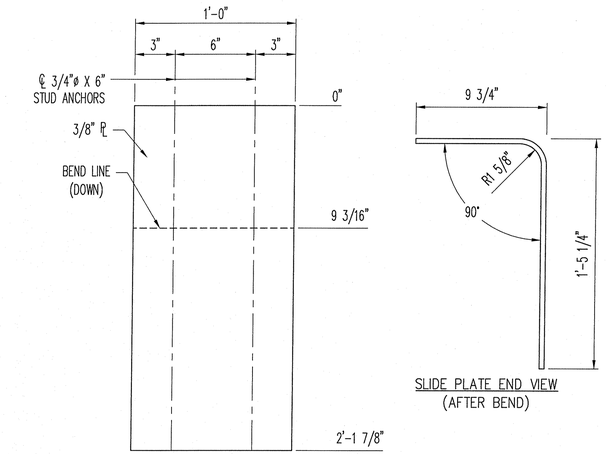

ITEM NO. 19cp3
(1) REQ'D.

UPPER CURB SLIDE PLATE

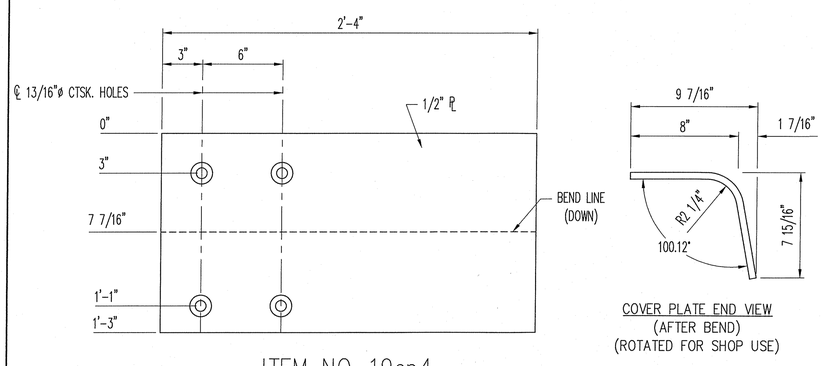

ITEM NO. 19cp4
(1) REQ'D.

LOWER CURB COVER PLATE

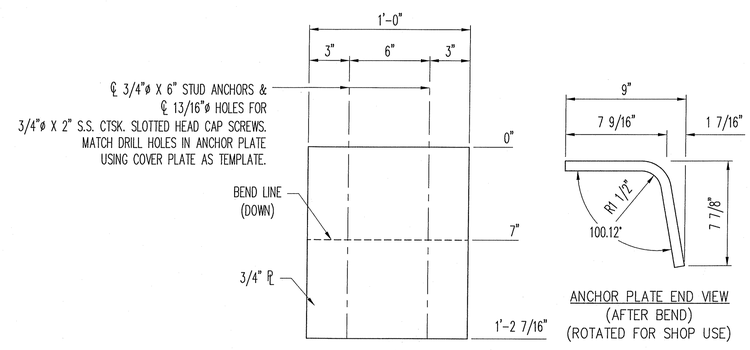

ITEM NO. 19cp5
(1) REQ'D.

LOWER CURB ANCHOR PLATE

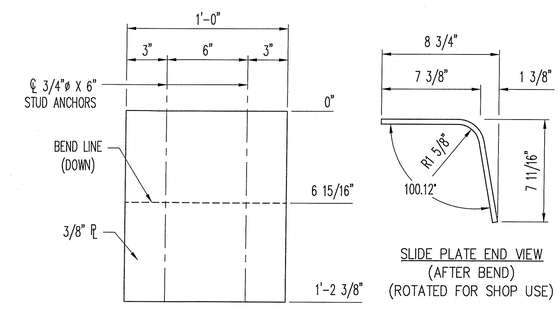

ITEM NO. 19cp6
(1) REQ'D.

LOWER CURB SLIDE PLATE

APPROVED
For Main Dimensions and Materials Only
AUG 27 2013
Engineer of Bridge & Traffic Structures

SHOP NOTES:

- SEE PARAPET COVER PLATE DETAILS ON SHEET 19
- SEE COVER PLATE NOTES ON SHEET 19
- SEE COVER PLATE BILL OF MATERIALS ON SHEET 31

REV.	DESCRIPTION	DATE	DET.	CKD.

D.S. BROWN
A GIBRALTAR INDUSTRIES COMPANY
THE D.S. BROWN COMPANY
300 E. CHERRY STREET
NORTH BALTIMORE, OHIO 45872
419.257.3561
FAX: 419.257.0332
WWW.DSBROWN.COM

LOCATION — I-24 OVER THE OHIO RIVER
STRUCTURE NO. — 064-0035
ROUTE — FAI ROUTE 24 (I-24)
SECTION — BSMART 2013-1
CONTRACT NO. — 78293 DISTRICT NO. — 9
P.O. NO. — 7838
DESIGNER — ILLINOIS DEPARTMENT OF TRANSPORTATION
CUSTOMER — HENNEGAN & ASSOCIATES (JOB NO. 06-0113)

ITEM	QUANTITY
–	–
–	–
–	–
–	–
–	–
–	–
–	–
–	–
–	–

DESCRIPTION:	SCALE:	DRAWN BY:	CHECKED BY:	DATE:	BRIDGE SHEET:
COVER PLATE DETAILS MASSAC COUNTY, ILLINOIS	N.T.S.	RES	TKE	6/13/13	20 OF 31
	PROJECT NUMBER	PRODUCT CODE	RELEASE	SHEET	
	40606	1021	1	20	

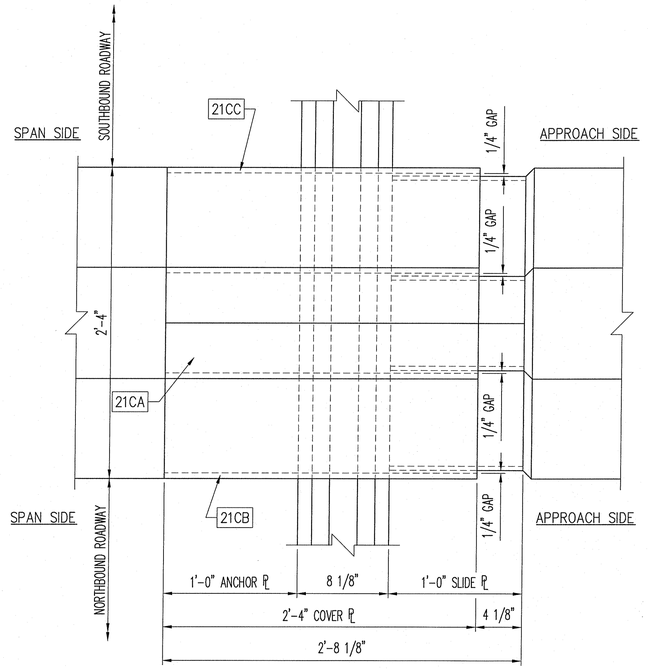

COVER PLATE PLAN VIEW @ MEDIAN

COVER PLATE ASSEMBLIES 21CA, 21CB, & 21CC
LOCATED AT CELL A
DIMENSIONS SHOWN ARE AT MID. TEMP. (50°F)
(STUD ANCHORS & HARDWARE NOT SHOWN FOR CLARITY)

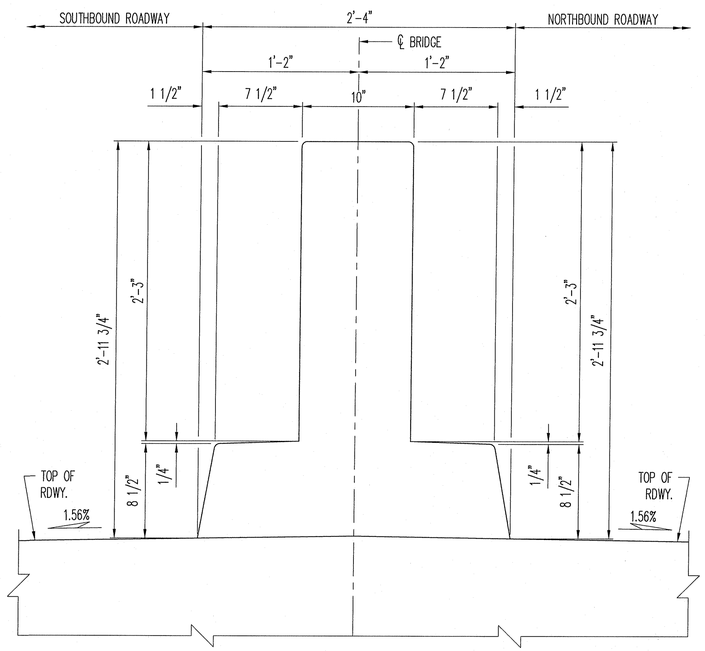

SECTION 1-1

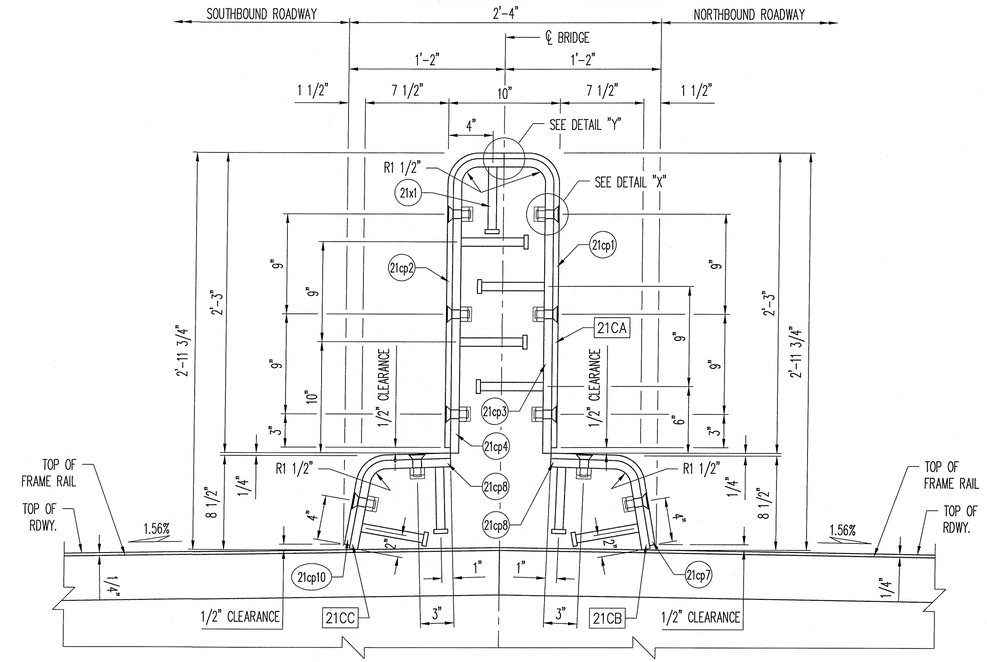

SECTION 2-2

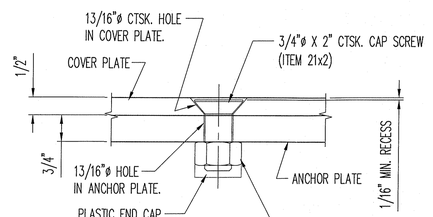

DETAIL X

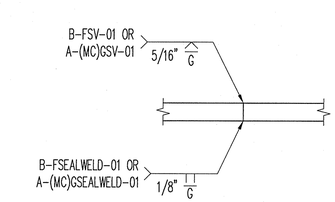

DETAIL Y

(COVER, ANCHOR, & SLIDE PLATE WELD DETAIL)

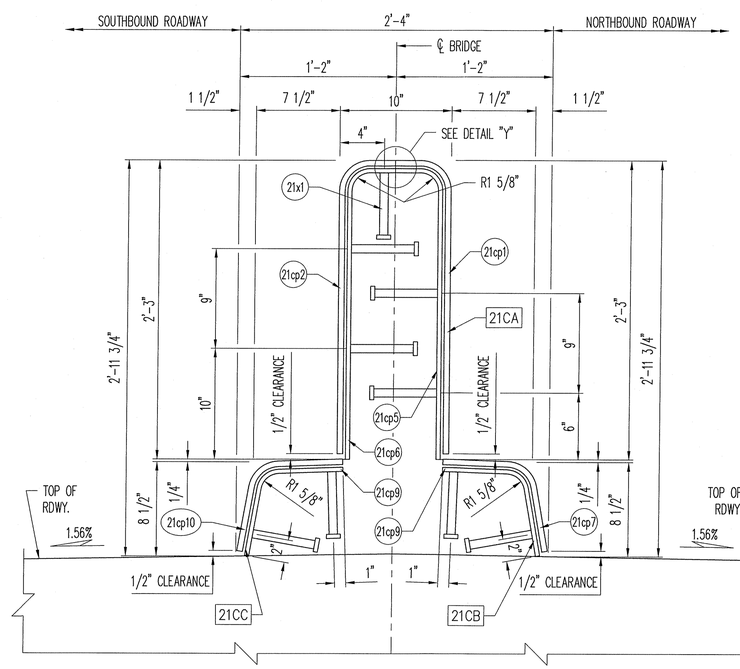

SECTION 3-3

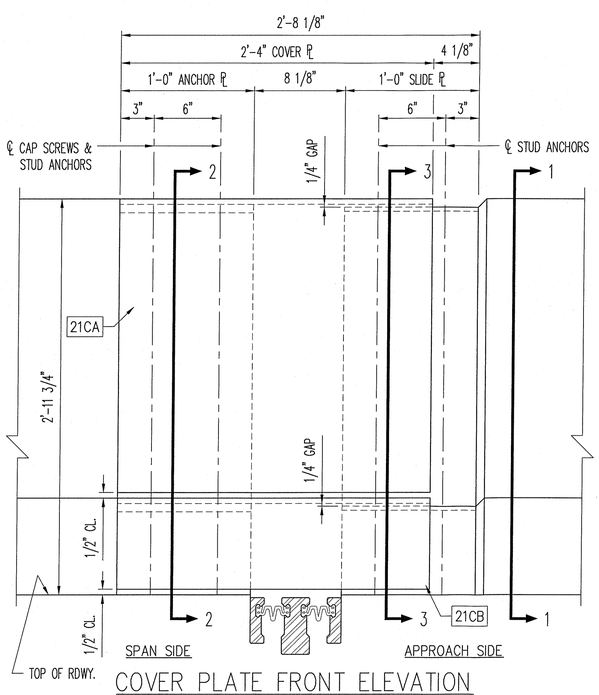

COVER PLATE FRONT ELEVATION

DIMENSIONS SHOWN ARE AT MID. TEMP. (50°F)
(STUD ANCHORS & HARDWARE NOT SHOWN FOR CLARITY)

SHOP NOTES:

- SEE PLATE BEND DETAILS ON SHEET 22
- SEE COVER PLATE BILL OF MATERIALS ON SHEET 31

COVER PLATE NOTES

ALL PLATES SHALL BE ASTM-A36 STEEL AND GALVANIZED IN ACCORDANCE WITH ASTM-A123. (AFTER FABRICATION)

COVER PLATES SHALL BE MOUNTED USING 3/4"ø X 2" CTSK. CAP SCREWS (ITEM 21x2) W/ 3/4"ø HEX NUTS (TACK WELDED TO ANCHOR PLATE) (ITEM 21x3).

A PLASTIC END CAP SHALL BE UTILIZED ON BACK SIDE OF NUT TO PREVENT CONCRETE FROM ENTERING THREADS (ITEMS 21x4).

ANCHOR PLATE AND SLIDE PLATE ASSEMBLIES SHALL BE MOUNTED USING 3/4"ø X 6" LONG STUD ANCHORS (ITEM 21x1).

COVER PLATES SHALL BE MOUNTED ON SPAN SIDE OF JOINT.

ALL HOLES MUST BE DRILLED OR PUNCHED.

APPROVED
For Main Dimensions and Materials Only
AUG 27 2013
Engineer of Bridge & Traffic Structures

REV.	DESCRIPTION	DATE	DET.	CKD.

D.S. BROWN
A GIBRALTAR INDUSTRIES COMPANY
THE D.S. BROWN COMPANY
300 E. CHERRY STREET
NORTH BALTIMORE, OHIO 45872
419.257.3561
FAX: 419.257.0332
WWW.DSBROWN.COM

LOCATION — I-24 OVER THE OHIO RIVER
STRUCTURE NO. — 064-0035
ROUTE — FAI ROUTE 24 (I-24)
SECTION — BSMART 2013-1
CONTRACT NO. — 78293 DISTRICT NO. — 9
P.O. NO. — 7838
DESIGNER — ILLINOIS DEPARTMENT OF TRANSPORTATION
CUSTOMER — HENNEGAN & ASSOCIATES (JOB NO. 06-0113)

ITEM	QUANTITY
–	–
–	–
–	–
–	–
–	–
–	–
–	–
–	–
–	–
–	–

DESCRIPTION:	SCALE:	DRAWN BY:	CHECKED BY:	DATE:	BRIDGE SHEET:
COVER PLATE DETAILS MASSAC COUNTY, ILLINOIS	N.T.S.	RES	TKE	6/13/13	21 OF 31
	PROJECT NUMBER	PRODUCT CODE	RELEASE	SHEET	
	40606	1021	1	21	

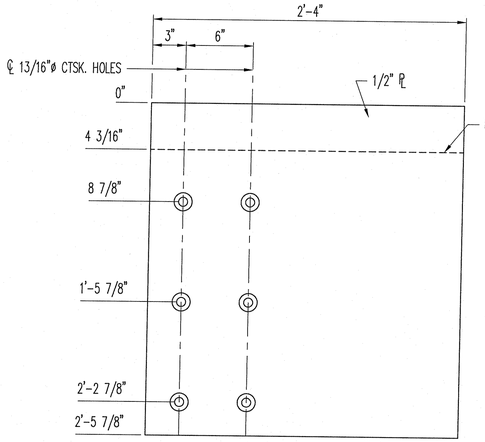

ITEM NO. 21cp1
(1) REQ'D.
UPPER MEDIAN COVER PLATE

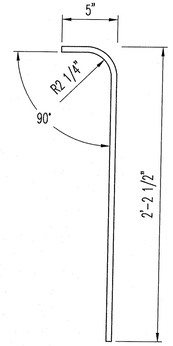

TYP. UPPER COVER PLATE END VIEW
(AFTER BEND)

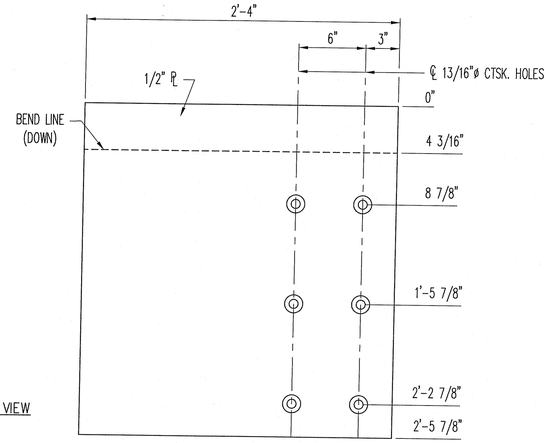

ITEM NO. 21cp2
(1) REQ'D.
UPPER MEDIAN COVER PLATE

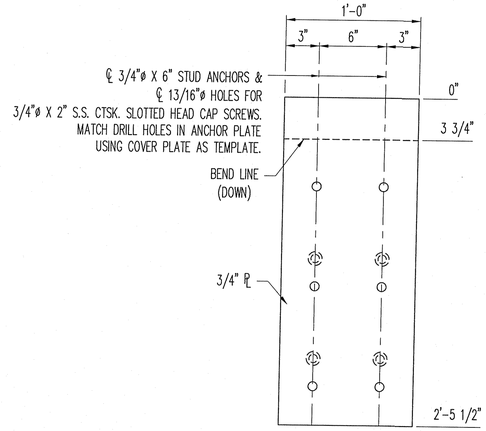

ITEM NO. 21cp3
(1) REQ'D.
UPPER MEDIAN ANCHOR PLATE

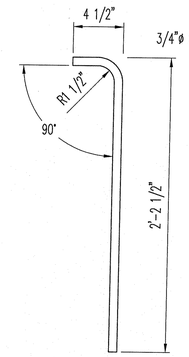

TYP. UPPER ANCHOR PLATE END VIEW
(AFTER BEND)

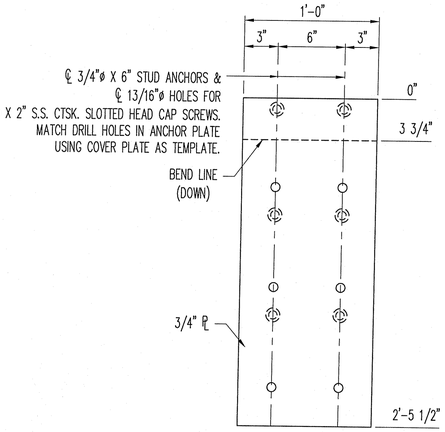

ITEM NO. 21cp4
(1) REQ'D.
UPPER MEDIAN ANCHOR PLATE

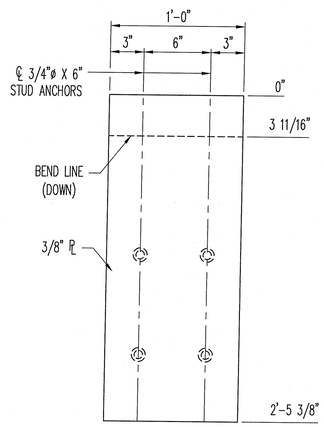

ITEM NO. 21cp5
(1) REQ'D.
UPPER MEDIAN SLIDE PLATE

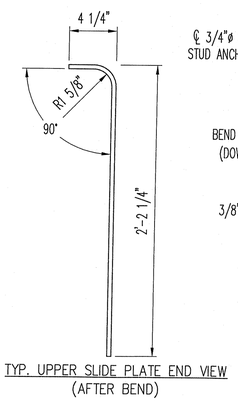

TYP. UPPER SLIDE PLATE END VIEW
(AFTER BEND)

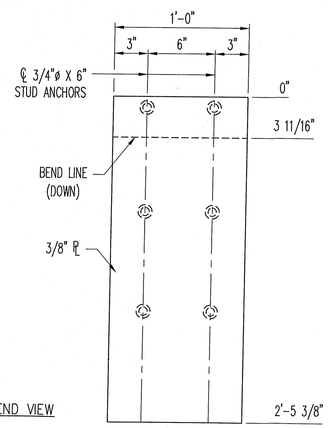

ITEM NO. 21cp6
(1) REQ'D.
UPPER MEDIAN SLIDE PLATE

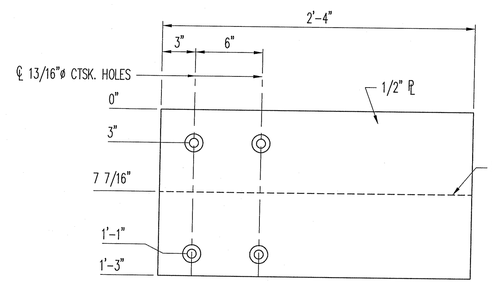

ITEM NO. 21cp7
(1) REQ'D.
LOWER MEDIAN COVER PLATE

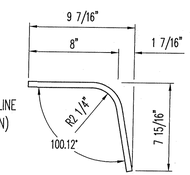

TYP. LOWER COVER PLATE END VIEW
(AFTER BEND)
(ROTATED FOR SHOP USE)

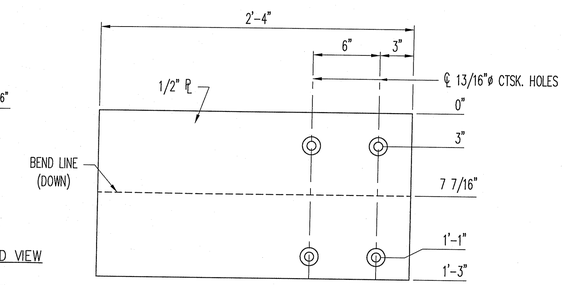

ITEM NO. 21cp10
(1) REQ'D.
LOWER MEDIAN COVER PLATE

APPROVED
For Main Dimensions and Materials Only
AUG 27 2013
R. Carl Pfeifer
Engineer of Bridge & Traffic Structures

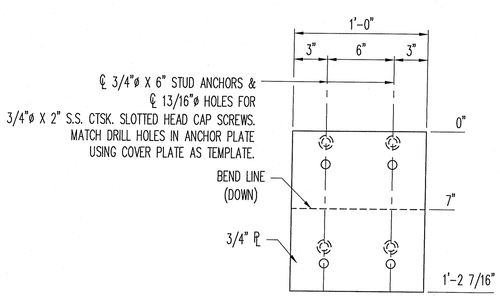

ITEM NO. 21cp8
(2) REQ'D.
LOWER MEDIAN ANCHOR PLATE

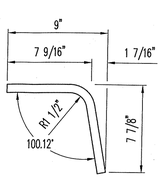

TYP. LOWER ANCHOR PLATE END VIEW
(AFTER BEND)
(ROTATED FOR SHOP USE)

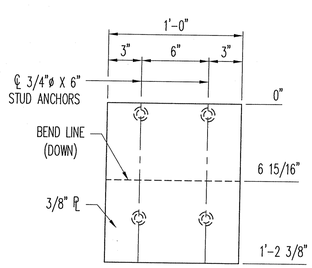

ITEM NO. 21cp9
(2) REQ'D.
LOWER MEDIAN SLIDE PLATE

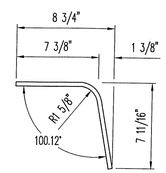

TYP. LOWER SLIDE PLATE END VIEW
(AFTER BEND)
(ROTATED FOR SHOP USE)

SHOP NOTES:

- SEE MEDIAN COVER PLATE DETAILS ON SHEET 21
- SEE COVER PLATE NOTES ON SHEET 21
- SEE COVER PLATE BILL OF MATERIALS ON SHEET 31

REV.	DESCRIPTION	DATE	DET.	CKD.

D.S. BROWN
A GIBRALTAR INDUSTRIES COMPANY
THE D.S. BROWN COMPANY
300 E. CHERRY STREET
NORTH BALTIMORE, OHIO 45872
419.257.3561
FAX: 419.257.0332
WWW.DSBROWN.COM

LOCATION — I-24 OVER THE OHIO RIVER
STRUCTURE NO. — 064-0035
ROUTE — FAI ROUTE 24 (I-24)
SECTION — BSMART 2013-1
CONTRACT NO. — 78293 DISTRICT NO. — 9
P.O. NO. — 7838
DESIGNER — ILLINOIS DEPARTMENT OF TRANSPORTATION
CUSTOMER — HENNEGAN & ASSOCIATES (JOB NO. 06-0113)

ITEM	QUANTITY
–	–
–	–
–	–
–	–
–	–
–	–
–	–
–	–
–	–

DESCRIPTION:	SCALE:	DRAWN BY:	CHECKED BY:	DATE:	BRIDGE SHEET:
COVER PLATE DETAILS MASSAC COUNTY, ILLINOIS	N.T.S.	RES	TKE	6/13/13	22 OF 31
	PROJECT NUMBER	PRODUCT CODE	RELEASE	SHEET	
	40606	1021	1	22	

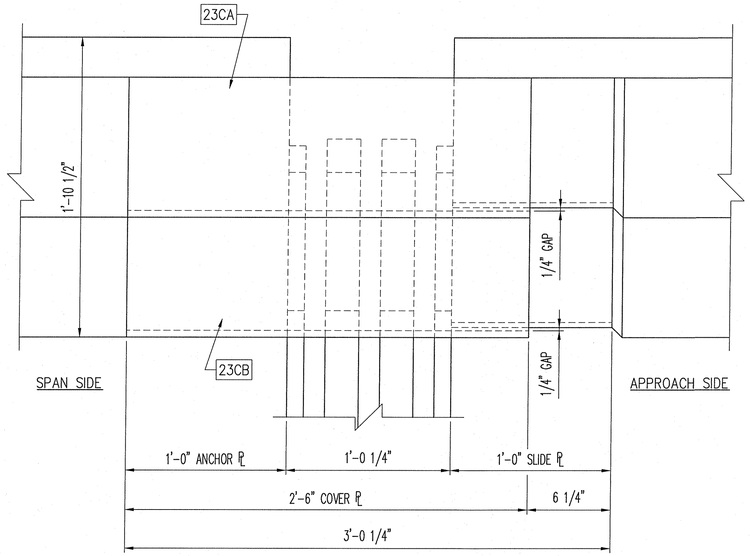

COVER PLATE PLAN VIEW @ PARAPET

COVER PLATE ASSEMBLIES 23CA & 23CB
LOCATED AT CELL B (EAST PARAPET)
DIMENSIONS SHOWN ARE AT MID. TEMP. (50°F)
(STUD ANCHORS & HARDWARE NOT SHOWN FOR CLARITY)

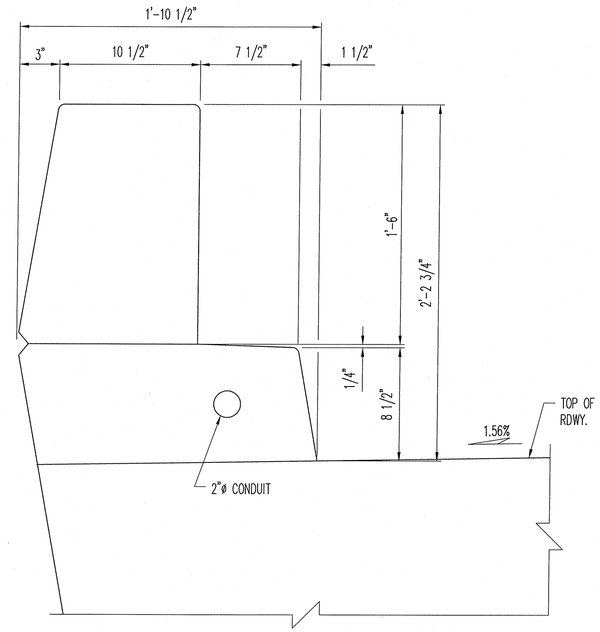

SECTION 1–1

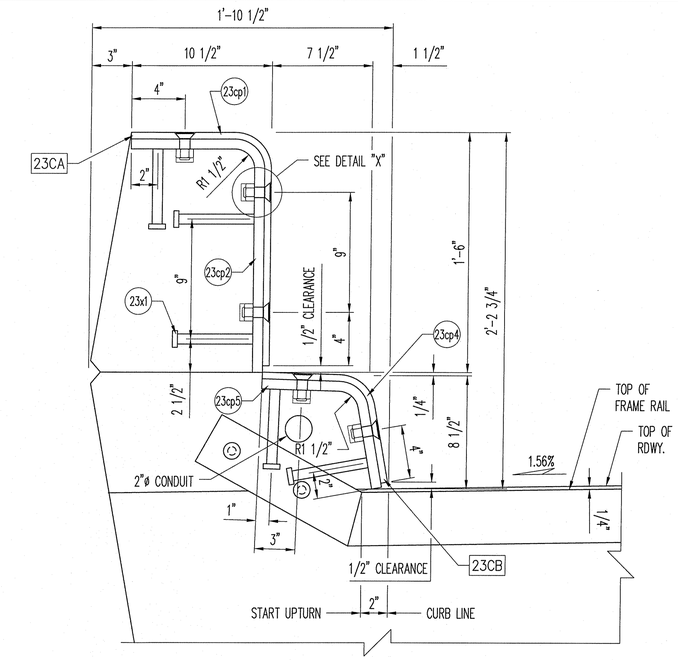

SECTION 2–2

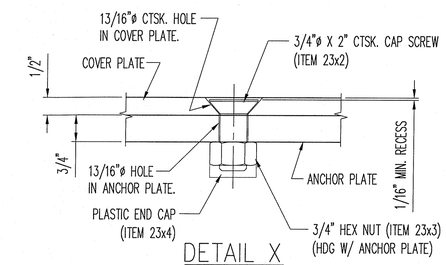

DETAIL X

APPROVED
For Main Dimensions and Materials Only
AUG 27 2013
Engineer of Bridge & Traffic Structures

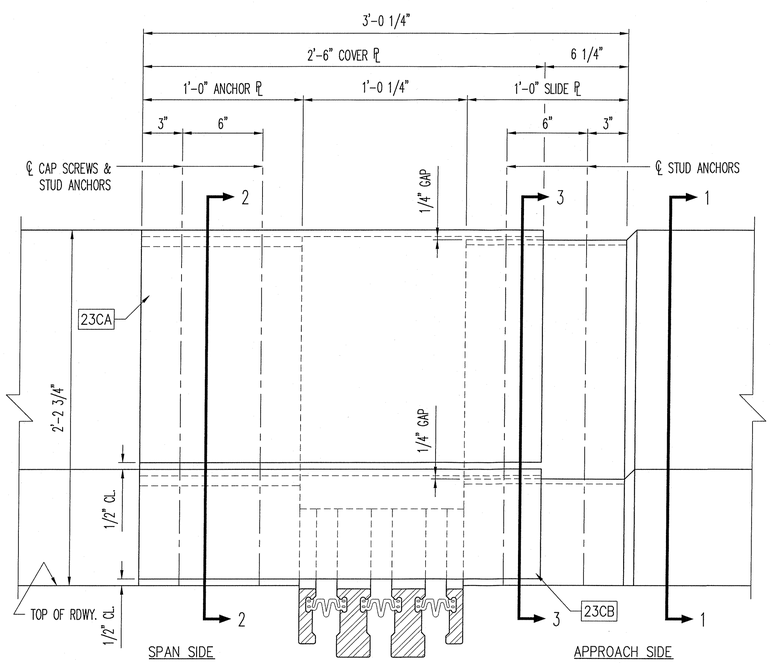

COVER PLATE FRONT ELEVATION

DIMENSIONS SHOWN ARE AT MID. TEMP. (50°F)
(STUD ANCHORS & HARDWARE NOT SHOWN FOR CLARITY)

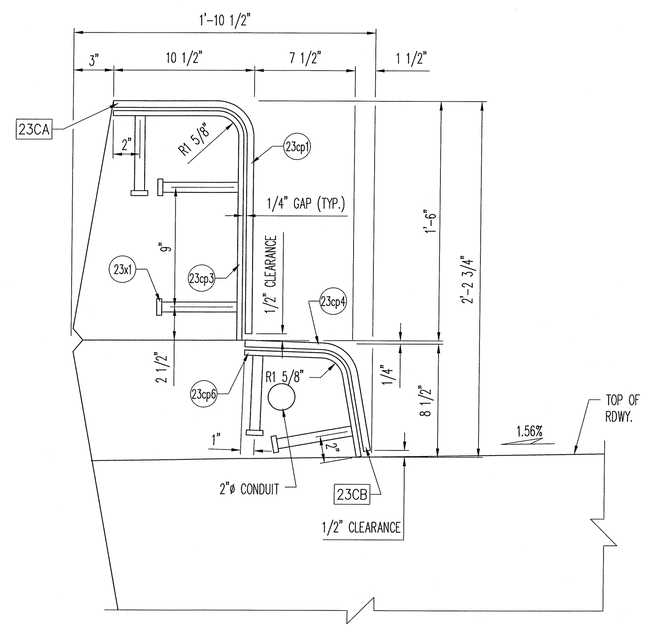

SECTION 3–3

COVER PLATE NOTES

ALL PLATES SHALL BE ASTM–A36 STEEL AND GALVANIZED IN ACCORDANCE WITH ASTM–A123. (AFTER FABRICATION)

COVER PLATES SHALL BE MOUNTED USING 3/4"ø X 2" CTSK. CAP SCREWS (ITEM 23x2) W/ 3/4"ø HEX NUTS (TACK WELDED TO ANCHOR PLATE) (ITEM 23x3).

A PLASTIC END CAP SHALL BE UTILIZED ON BACK SIDE OF NUT TO PREVENT CONCRETE FROM ENTERING THREADS (ITEMS 23x4).

ANCHOR PLATE AND SLIDE PLATE ASSEMBLIES SHALL BE MOUNTED USING 3/4"ø X 6" LONG STUD ANCHORS (ITEM 23x1).

COVER PLATES SHALL BE MOUNTED ON SPAN SIDE OF JOINT.

ALL HOLES MUST BE DRILLED OR PUNCHED.

SHOP NOTES:

- SEE PLATE BEND DETAILS ON SHEET 24
- SEE COVER PLATE BILL OF MATERIALS ON SHEET 31

REV.	DESCRIPTION	DATE	DET.	CKD.

D.S. BROWN
A GIBRALTAR INDUSTRIES COMPANY
THE D.S. BROWN COMPANY
300 E. CHERRY STREET
NORTH BALTIMORE, OHIO 45872
419.257.3561
FAX: 419.257.0332
WWW.DSBROWN.COM

LOCATION — I–24 OVER THE OHIO RIVER
STRUCTURE NO. — 064–0035
ROUTE — FAI ROUTE 24 (I–24)
SECTION — BSMART 2013–1
CONTRACT NO. — 78293 DISTRICT NO. — 9
P.O. NO. — 7838
DESIGNER — ILLINOIS DEPARTMENT OF TRANSPORTATION
CUSTOMER — HENNEGAN & ASSOCIATES (JOB NO. 06–0113)

ITEM	QUANTITY
–	–
–	–
–	–
–	–
–	–
–	–
–	–
–	–
–	–

DESCRIPTION:	SCALE:	DRAWN BY:	CHECKED BY:	DATE:	BRIDGE SHEET:
COVER PLATE DETAILS MASSAC COUNTY, ILLINOIS	N.T.S.	RES	TKE	6/13/13	23 OF 31
	PROJECT NUMBER 40606	PRODUCT CODE 1021	RELEASE 1	SHEET 23	

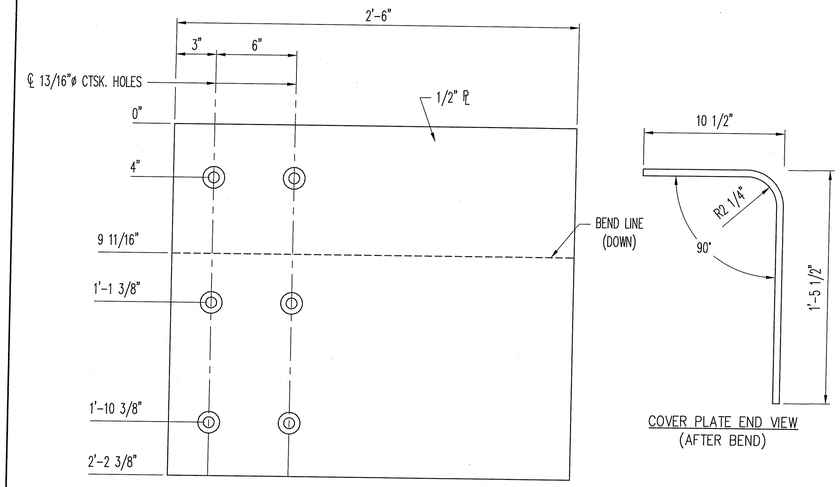

ITEM NO. 23cp1
(1) REQ'D.

UPPER CURB COVER PLATE

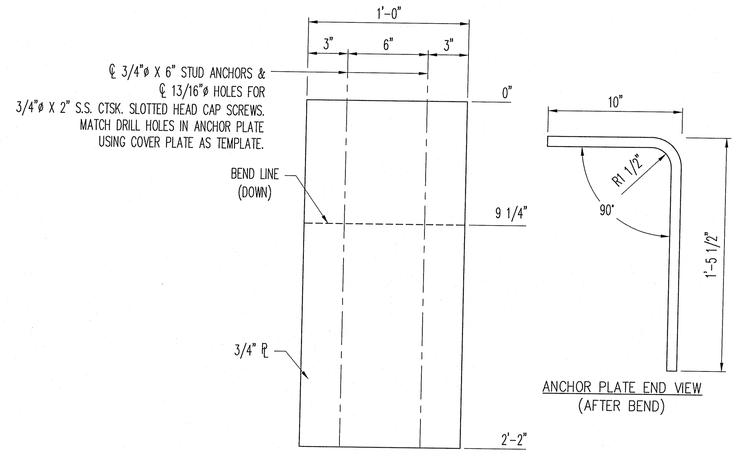

ITEM NO. 23cp2
(1) REQ'D.

UPPER CURB ANCHOR PLATE

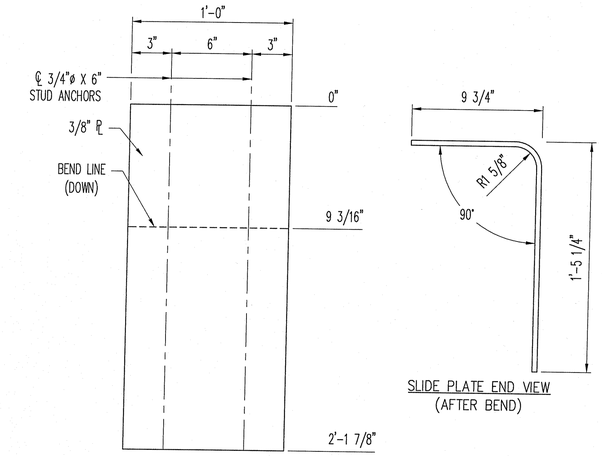

ITEM NO. 23cp3
(1) REQ'D.

UPPER CURB SLIDE PLATE

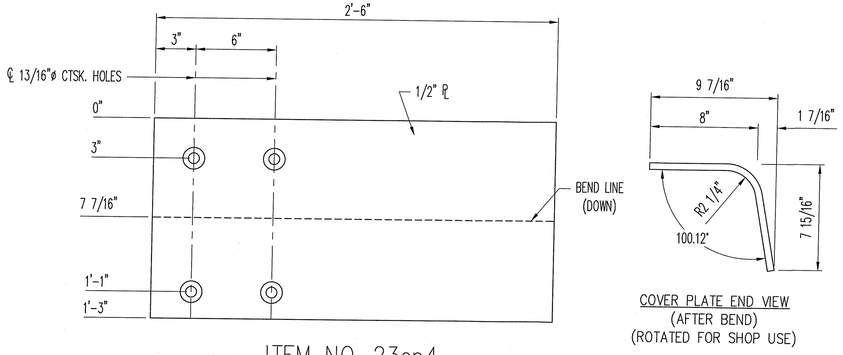

ITEM NO. 23cp4
(1) REQ'D.

LOWER CURB COVER PLATE

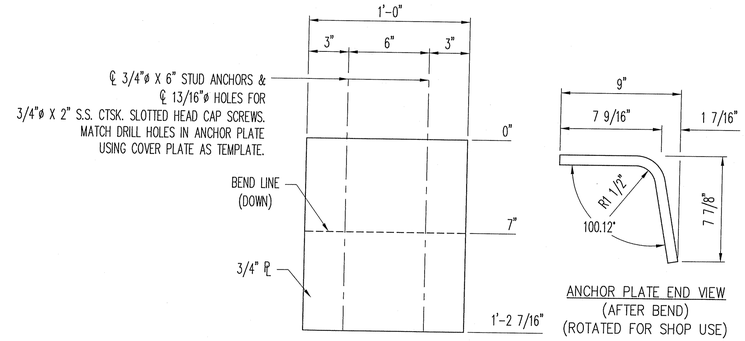

ITEM NO. 23cp5
(1) REQ'D.

LOWER CURB ANCHOR PLATE

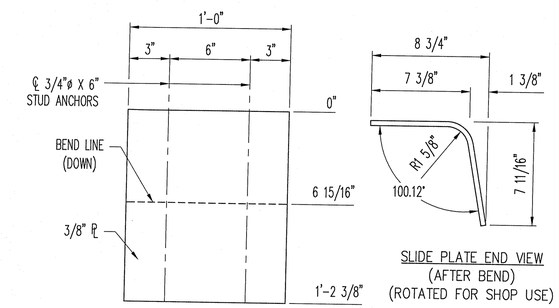

ITEM NO. 23cp6
(1) REQ'D.

LOWER CURB SLIDE PLATE

APPROVED
For Main Dimensions and Materials Only
AUG 27 2013
Engineer of Bridge & Traffic Structures

SHOP NOTES:

- SEE PARAPET COVER PLATE DETAILS ON SHEET 23
- SEE COVER PLATE NOTES ON SHEET 23
- SEE COVER PLATE BILL OF MATERIALS ON SHEET 31

REV.	DESCRIPTION	DATE	DET.	CKD.

D.S. BROWN
A GIBRALTAR INDUSTRIES COMPANY
THE D.S. BROWN COMPANY
300 E. CHERRY STREET
NORTH BALTIMORE, OHIO 45872
419.257.3561
FAX: 419.257.0332
WWW.DSBROWN.COM

LOCATION — I-24 OVER THE OHIO RIVER
STRUCTURE NO. — 064-0035
ROUTE — FAI ROUTE 24 (I-24)
SECTION — BSMART 2013-1
CONTRACT NO. — 78293 DISTRICT NO. — 9
P.O. NO. — 7838
DESIGNER — ILLINOIS DEPARTMENT OF TRANSPORTATION
CUSTOMER — HENNEGAN & ASSOCIATES (JOB NO. 06-0113)

ITEM	QUANTITY
–	–
–	–
–	–
–	–
–	–
–	–
–	–
–	–
–	–
–	–

DESCRIPTION: COVER PLATE DETAILS
MASSAC COUNTY, ILLINOIS

SCALE:	DRAWN BY:	CHECKED BY:	DATE:	BRIDGE SHEET:
N.T.S.	RES	TKE	6/13/13	24 OF 31

PROJECT NUMBER	PRODUCT CODE	RELEASE	SHEET
40606	1021	1	24

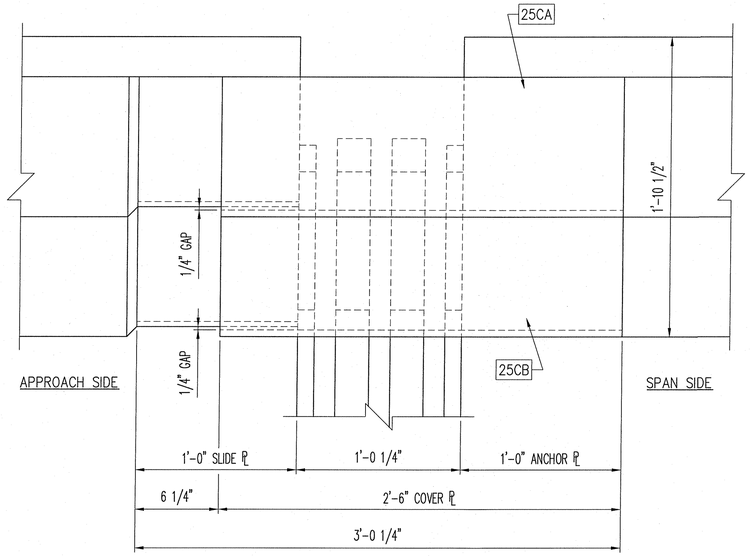

COVER PLATE PLAN VIEW @ PARAPET

COVER PLATE ASSEMBLIES 25CA & 25CB
LOCATED AT CELL B (WEST PARAPET)
DIMENSIONS SHOWN ARE AT MID. TEMP. (50°F)
(STUD ANCHORS & HARDWARE NOT SHOWN FOR CLARITY)

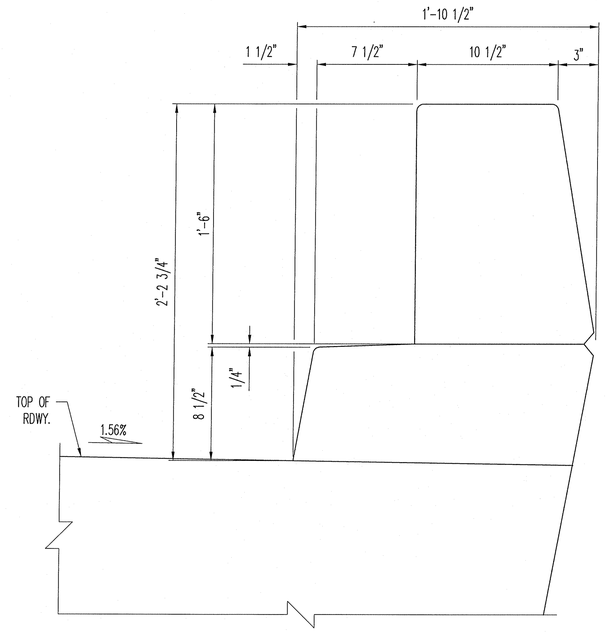

SECTION 1-1

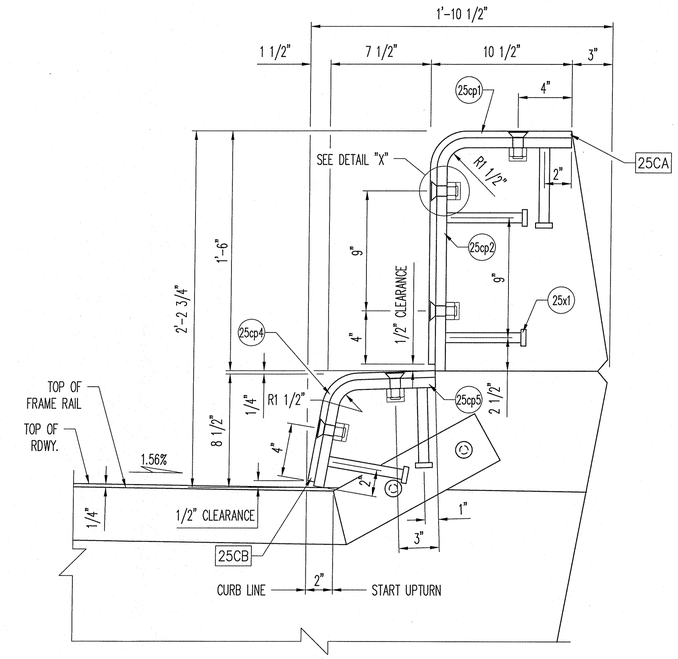

SECTION 2-2

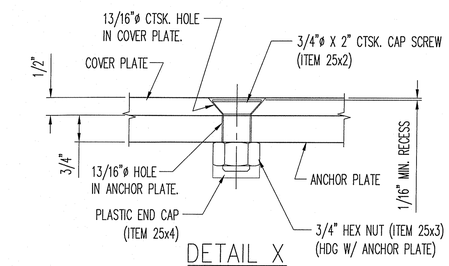

DETAIL X

APPROVED
For Main Dimensions and Materials Only
AUG 27 2013
Engineer of Bridge & Traffic Structures

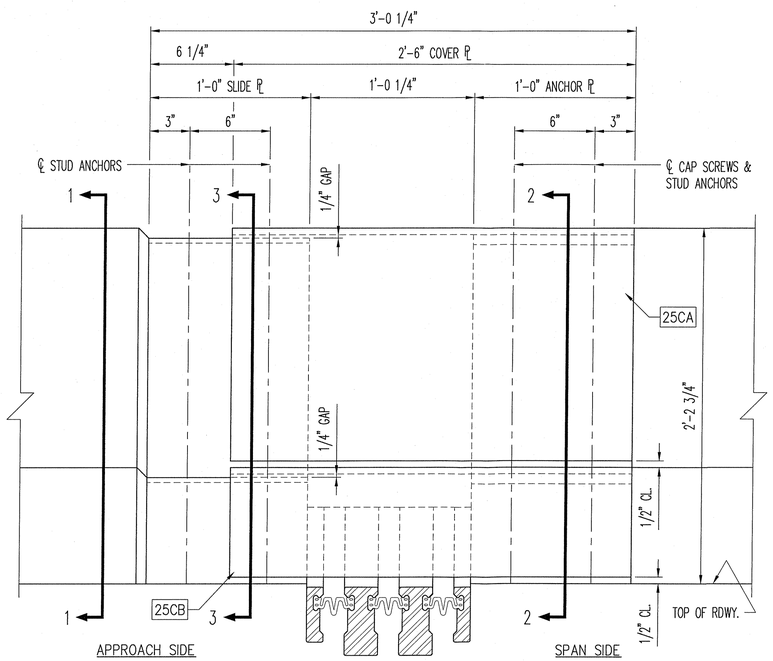

COVER PLATE FRONT ELEVATION

DIMENSIONS SHOWN ARE AT MID. TEMP. (50°F)
(STUD ANCHORS & HARDWARE NOT SHOWN FOR CLARITY)

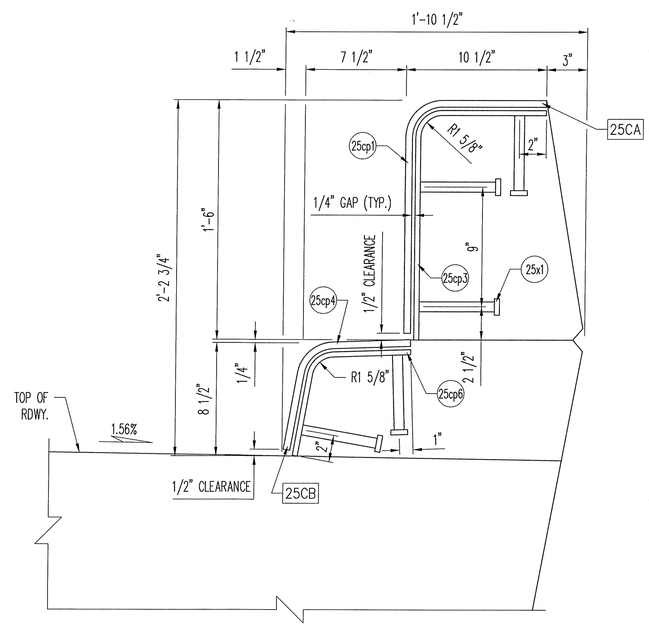

SECTION 3-3

SHOP NOTES:

- SEE PLATE BEND DETAILS ON SHEET 26
- SEE COVER PLATE BILL OF MATERIALS ON SHEET 31

COVER PLATE NOTES

ALL PLATES SHALL BE ASTM-A36 STEEL AND GALVANIZED IN ACCORDANCE WITH ASTM-A123. (AFTER FABRICATION)

COVER PLATES SHALL BE MOUNTED USING 3/4"ø X 2" CTSK. CAP SCREWS (ITEM 25x2) W/ 3/4"ø HEX NUTS (TACK WELDED TO ANCHOR PLATE) (ITEM 25x3).

A PLASTIC END CAP SHALL BE UTILIZED ON BACK SIDE OF NUT TO PREVENT CONCRETE FROM ENTERING THREADS (ITEMS 25x4).

ANCHOR PLATE AND SLIDE PLATE ASSEMBLIES SHALL BE MOUNTED USING 3/4"ø X 6" LONG STUD ANCHORS (ITEM 25x1).

COVER PLATES SHALL BE MOUNTED ON SPAN SIDE OF JOINT.

ALL HOLES MUST BE DRILLED OR PUNCHED.

REV.	DESCRIPTION	DATE	DET.	CKD.

D.S. BROWN
A GIBRALTAR INDUSTRIES COMPANY
THE D.S. BROWN COMPANY
300 E. CHERRY STREET
NORTH BALTIMORE, OHIO 45872
419.257.3561
FAX: 419.257.0332
WWW.DSBROWN.COM

LOCATION — I-24 OVER THE OHIO RIVER
STRUCTURE NO. — 064-0035
ROUTE — FAI ROUTE 24 (I-24)
SECTION — BSMART 2013-1
CONTRACT NO. — 78293 DISTRICT NO. — 9
P.O. NO. — 7838
DESIGNER — ILLINOIS DEPARTMENT OF TRANSPORTATION
CUSTOMER — HENNEGAN & ASSOCIATES (JOB NO. 06-0113)

ITEM	QUANTITY
–	–
–	–
–	–
–	–
–	–
–	–
–	–
–	–
–	–

DESCRIPTION:	SCALE:	DRAWN BY:	CHECKED BY:	DATE:	BRIDGE SHEET:
COVER PLATE DETAILS MASSAC COUNTY, ILLINOIS	N.T.S.	RES	TKE	6/13/13	25 OF 31
	PROJECT NUMBER	PRODUCT CODE	RELEASE	SHEET	
	40606	1021	1	25	

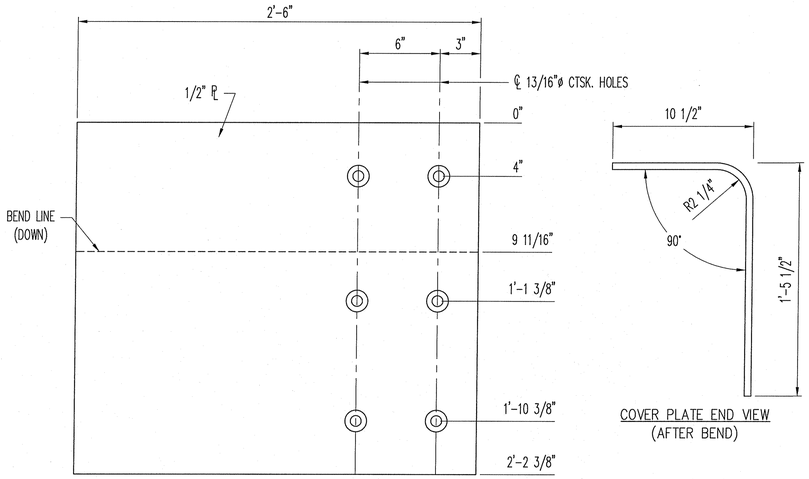

ITEM NO. 25cp1
(1) REQ'D.

UPPER CURB COVER PLATE

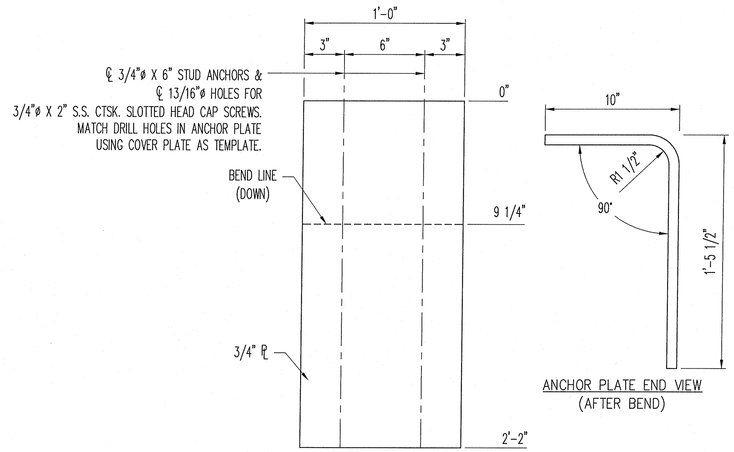

ITEM NO. 25cp2
(1) REQ'D.

UPPER CURB ANCHOR PLATE

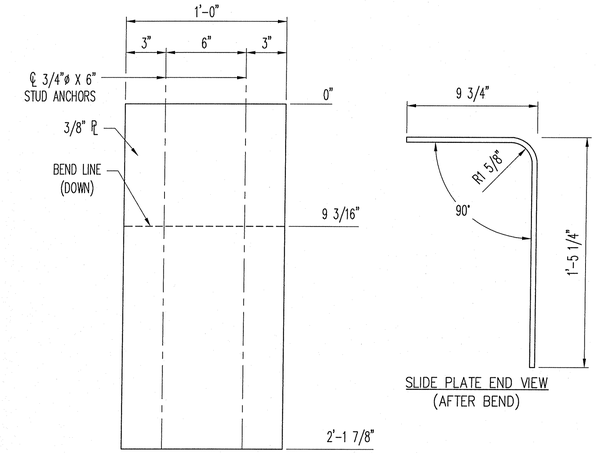

ITEM NO. 25cp3
(1) REQ'D.

UPPER CURB SLIDE PLATE

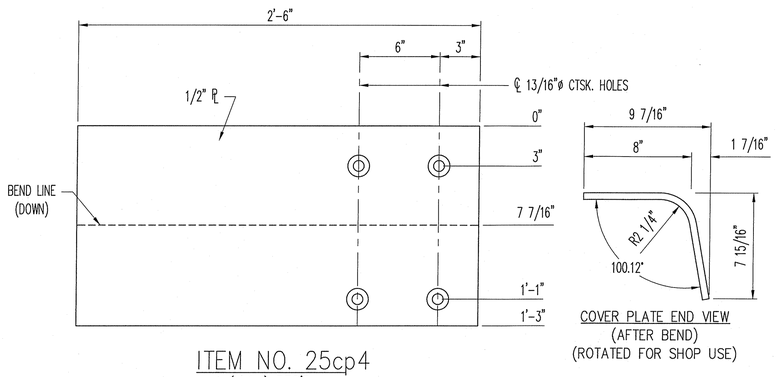

ITEM NO. 25cp4
(1) REQ'D.

LOWER CURB COVER PLATE

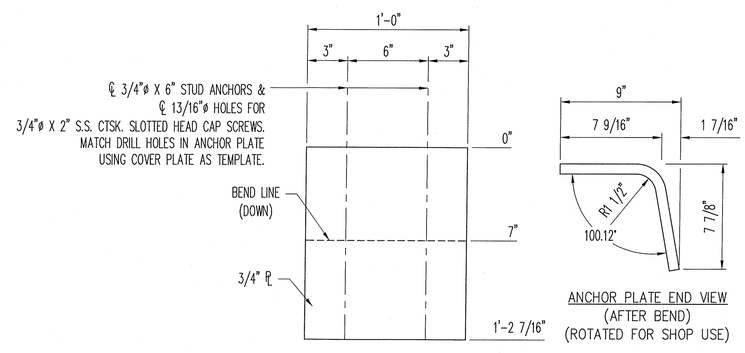

ITEM NO. 25cp5
(1) REQ'D.

LOWER CURB ANCHOR PLATE

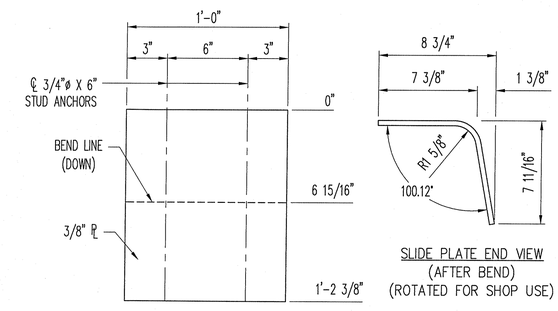

ITEM NO. 25cp6
(1) REQ'D.

LOWER CURB SLIDE PLATE

APPROVED
For Main Dimensions and Materials Only
AUG 27 2013
Engineer of Bridge & Traffic Structures

SHOP NOTES:

- SEE PARAPET COVER PLATE DETAILS ON SHEET 25
- SEE COVER PLATE NOTES ON SHEET 25
- SEE COVER PLATE BILL OF MATERIALS ON SHEET 31

REV.	DESCRIPTION	DATE	DET.	CKD.

D.S. BROWN
A GIBRALTAR INDUSTRIES COMPANY
THE D.S. BROWN COMPANY
300 E. CHERRY STREET
NORTH BALTIMORE, OHIO 45872
419.257.3561
FAX: 419.257.0332
WWW.DSBROWN.COM

	ITEM	QUANTITY
LOCATION — I-24 OVER THE OHIO RIVER	–	–
STRUCTURE NO. — 064-0035	–	–
ROUTE — FAI ROUTE 24 (I-24)	–	–
SECTION — BSMART 2013-1	–	–
CONTRACT NO. — 78293 DISTRICT NO. — 9	–	–
P.O. NO. — 7838	–	–
DESIGNER — ILLINOIS DEPARTMENT OF TRANSPORTATION	–	–
CUSTOMER — HENNEGAN & ASSOCIATES (JOB NO. 06-0113)	–	–

DESCRIPTION:	SCALE:	DRAWN BY:	CHECKED BY:	DATE:	BRIDGE SHEET:
COVER PLATE DETAILS MASSAC COUNTY, ILLINOIS	N.T.S.	RES	TKE	6/13/13	26 OF 31
	PROJECT NUMBER	PRODUCT CODE	RELEASE	SHEET	
	40606	1021	1	26	

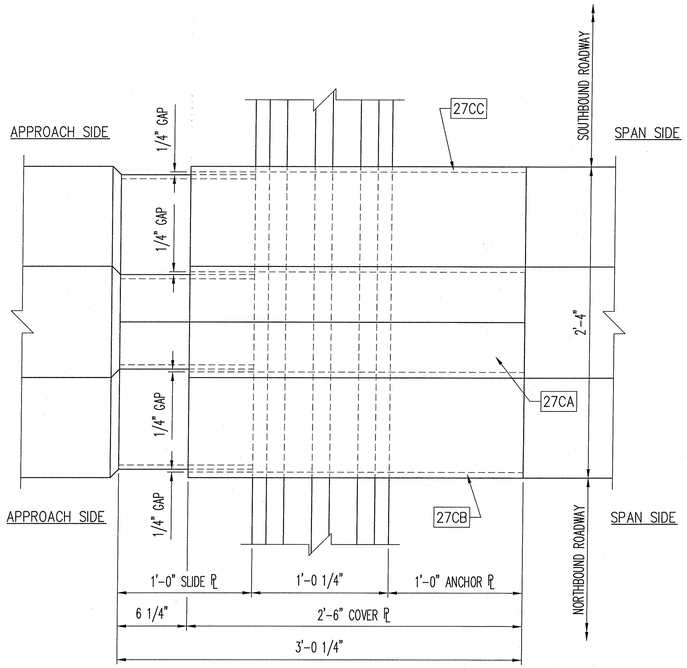

COVER PLATE PLAN VIEW @ MEDIAN

COVER PLATE ASSEMBLIES 27CA, 27CB, & 27CC
LOCATED AT CELL B
DIMENSIONS SHOWN ARE AT MID. TEMP. (50°F)
(STUD ANCHORS & HARDWARE NOT SHOWN FOR CLARITY)

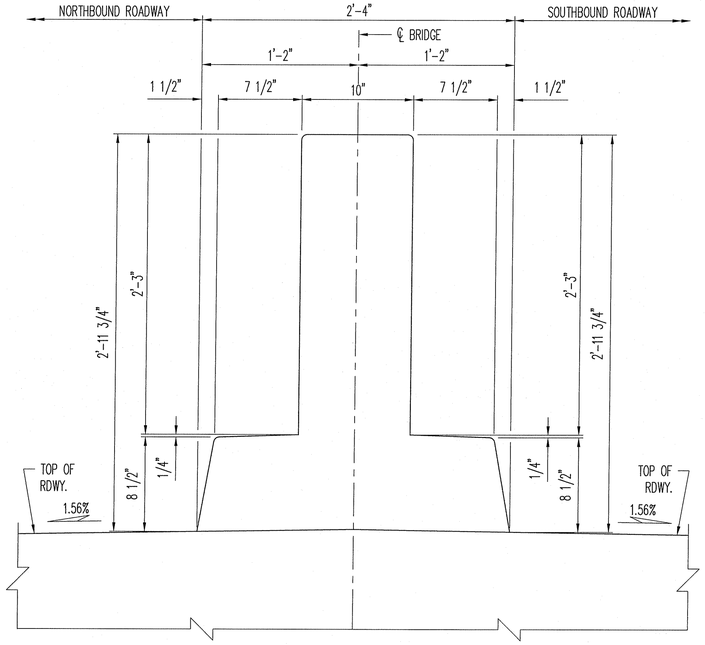

SECTION 1–1

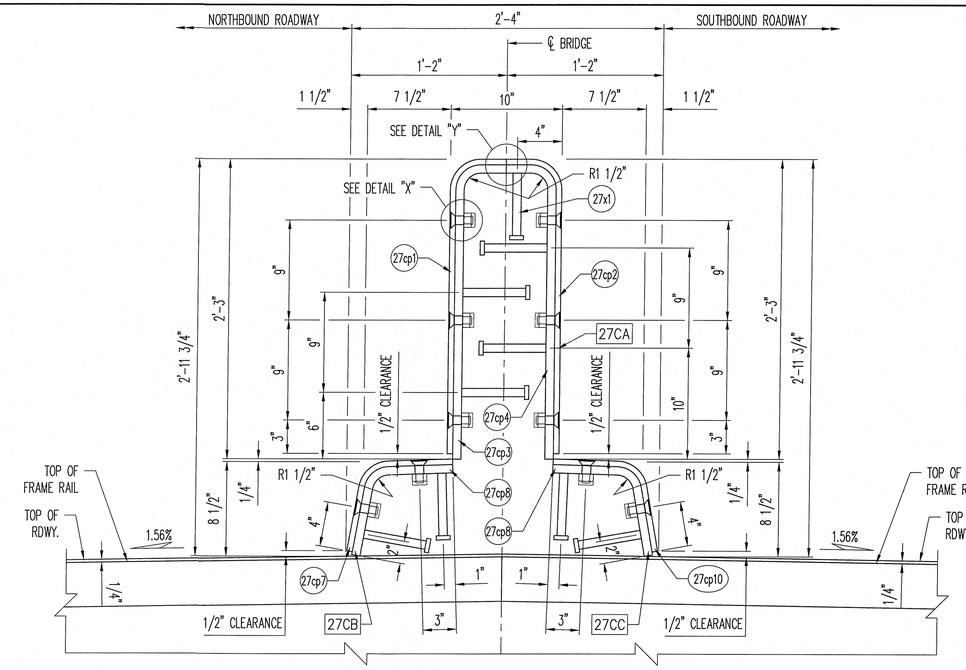

SECTION 2–2

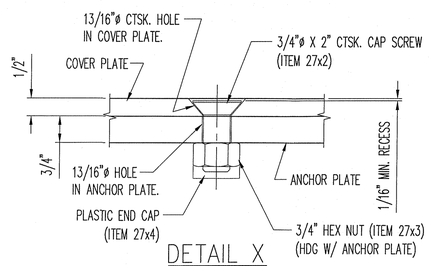

DETAIL X

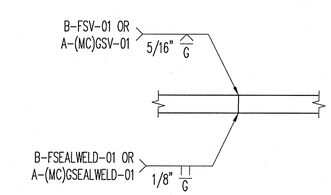

DETAIL Y

(COVER, ANCHOR, & SLIDE PLATE WELD DETAIL)

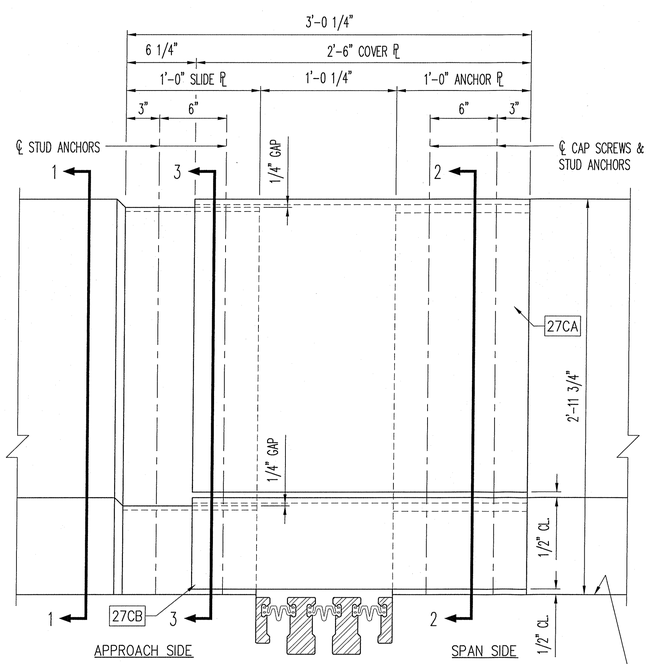

COVER PLATE FRONT ELEVATION

DIMENSIONS SHOWN ARE AT MID. TEMP. (50°F)
(STUD ANCHORS & HARDWARE NOT SHOWN FOR CLARITY)

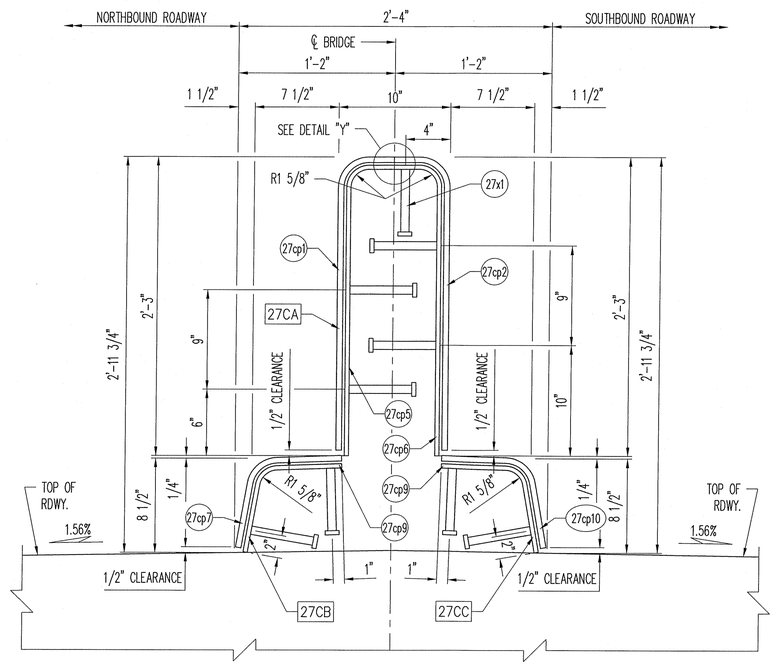

SECTION 3–3

SHOP NOTES:

- SEE PLATE BEND DETAILS ON SHEET 28
- SEE COVER PLATE BILL OF MATERIALS ON SHEET 31

COVER PLATE NOTES

ALL PLATES SHALL BE ASTM–A36 STEEL AND GALVANIZED IN ACCORDANCE WITH ASTM–A123. (AFTER FABRICATION)

COVER PLATES SHALL BE MOUNTED USING 3/4"ø X 2" CTSK. CAP SCREWS (ITEM 27x2) W/ 3/4"ø HEX NUTS (TACK WELDED TO ANCHOR PLATE) (ITEM 27x3).

A PLASTIC END CAP SHALL BE UTILIZED ON BACK SIDE OF NUT TO PREVENT CONCRETE FROM ENTERING THREADS (ITEMS 27x4).

ANCHOR PLATE AND SLIDE PLATE ASSEMBLIES SHALL BE MOUNTED USING 3/4"ø X 6" LONG STUD ANCHORS (ITEM 27x1).

COVER PLATES SHALL BE MOUNTED ON SPAN SIDE OF JOINT.

ALL HOLES MUST BE DRILLED OR PUNCHED.

APPROVED
For Main Dimensions and Materials Only
AUG 27 2013
Engineer of Bridge & Traffic Structures

REV.	DESCRIPTION	DATE	DET.	CKD.

D.S. BROWN
A GIBRALTAR INDUSTRIES COMPANY
THE D.S. BROWN COMPANY
300 E. CHERRY STREET
NORTH BALTIMORE, OHIO 45872
419.257.3561
FAX: 419.257.0332
WWW.DSBROWN.COM

	ITEM	QUANTITY
LOCATION — I–24 OVER THE OHIO RIVER	–	–
STRUCTURE NO. — 064–0035	–	–
ROUTE — FAI ROUTE 24 (I–24)	–	–
SECTION — BSMART 2013–1	–	–
CONTRACT NO. — 78293 DISTRICT NO. — 9	–	–
P.O. NO. — 7838	–	–
DESIGNER — ILLINOIS DEPARTMENT OF TRANSPORTATION	–	–
CUSTOMER — HENNEGAN & ASSOCIATES (JOB NO. 06–0113)	–	–

DESCRIPTION: COVER PLATE DETAILS
MASSAC COUNTY, ILLINOIS

SCALE:	DRAWN BY:	CHECKED BY:	DATE:	BRIDGE SHEET:
N.T.S.	RES	TKE	6/13/13	27 OF 31
PROJECT NUMBER	PRODUCT CODE	RELEASE	SHEET	
40606	1021	1	27	

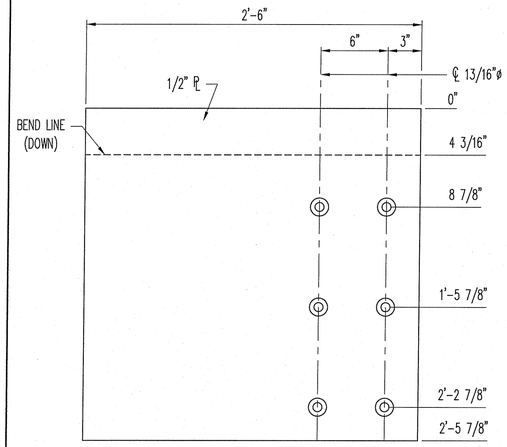

ITEM NO. 27cp1
(1) REQ'D.
UPPER MEDIAN COVER PLATE

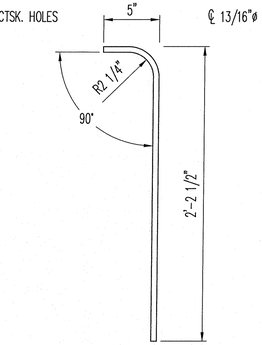

TYP. UPPER COVER PLATE END VIEW
(AFTER BEND)

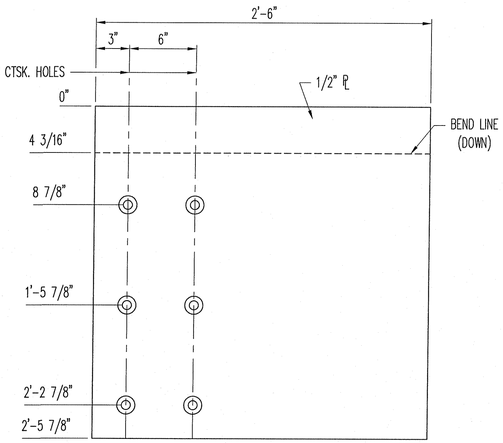

ITEM NO. 27cp2
(1) REQ'D.
UPPER MEDIAN COVER PLATE

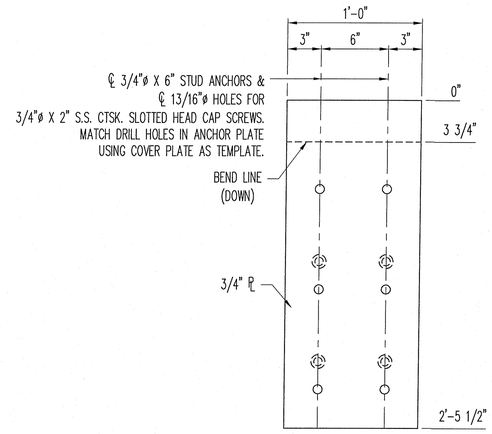

ITEM NO. 27cp3
(1) REQ'D.
UPPER MEDIAN ANCHOR PLATE

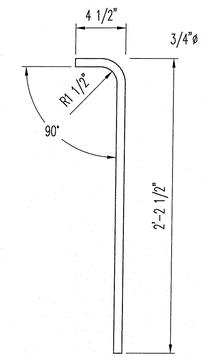

TYP. UPPER ANCHOR PLATE END VIEW
(AFTER BEND)

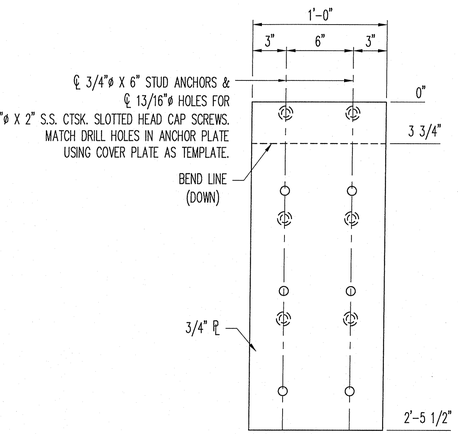

ITEM NO. 27cp4
(1) REQ'D.
UPPER MEDIAN ANCHOR PLATE

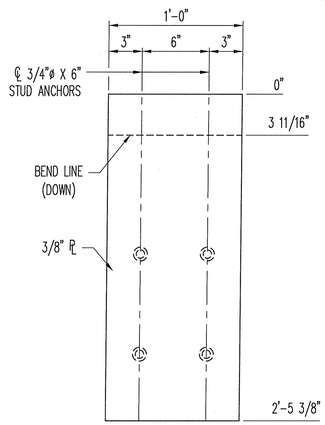

ITEM NO. 27cp5
(1) REQ'D.
UPPER MEDIAN SLIDE PLATE

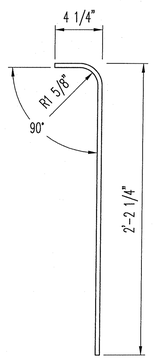

TYP. UPPER SLIDE PLATE END VIEW
(AFTER BEND)

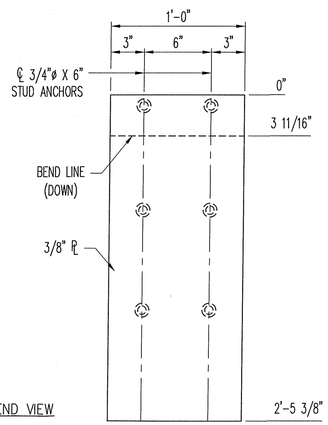

ITEM NO. 27cp6
(1) REQ'D.
UPPER MEDIAN SLIDE PLATE

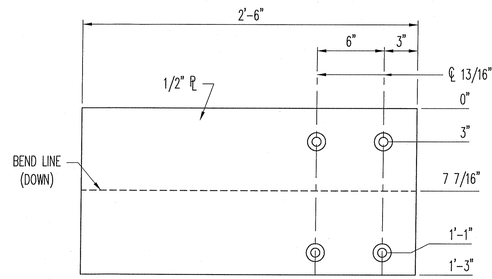

ITEM NO. 27cp7
(1) REQ'D.
LOWER MEDIAN COVER PLATE

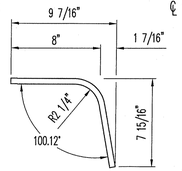

TYP. LOWER COVER PLATE END VIEW
(AFTER BEND)
(ROTATED FOR SHOP USE)

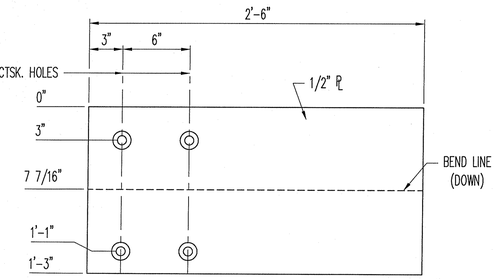

ITEM NO. 27cp10
(1) REQ'D.
LOWER MEDIAN COVER PLATE

APPROVED
For Main Dimensions and Materials Only
AUG 27 2013
Engineer of Bridge & Traffic Structures

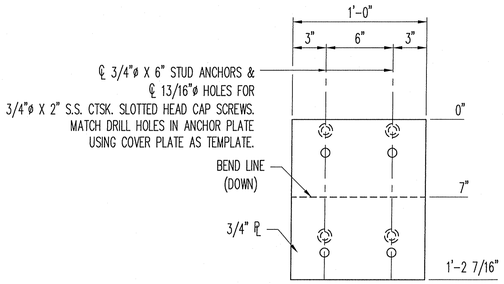

ITEM NO. 27cp8
(2) REQ'D.
LOWER MEDIAN ANCHOR PLATE

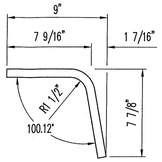

TYP. LOWER ANCHOR PLATE END VIEW
(AFTER BEND)
(ROTATED FOR SHOP USE)

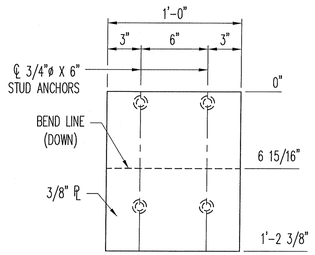

ITEM NO. 27cp9
(2) REQ'D.
LOWER MEDIAN SLIDE PLATE

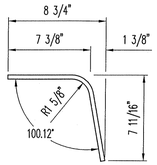

TYP. LOWER SLIDE PLATE END VIEW
(AFTER BEND)
(ROTATED FOR SHOP USE)

SHOP NOTES:

- SEE MEDIAN COVER PLATE DETAILS ON SHEET 27
- SEE COVER PLATE NOTES ON SHEET 27
- SEE COVER PLATE BILL OF MATERIALS ON SHEET 31

REV.	DESCRIPTION	DATE	DET.	CKD.

D.S. BROWN
A GIBRALTAR INDUSTRIES COMPANY
THE D.S. BROWN COMPANY
300 E. CHERRY STREET
NORTH BALTIMORE, OHIO 45872
419.257.3561
FAX: 419.257.0332
WWW.DSBROWN.COM

	ITEM	QUANTITY
LOCATION — I-24 OVER THE OHIO RIVER	–	–
STRUCTURE NO. — 064-0035	–	–
ROUTE — FAI ROUTE 24 (I-24)	–	–
SECTION — BSMART 2013-1	–	–
CONTRACT NO. — 78293 DISTRICT NO. — 9	–	–
P.O. NO. — 7838	–	–
DESIGNER — ILLINOIS DEPARTMENT OF TRANSPORTATION	–	–
CUSTOMER — HENNEGAN & ASSOCIATES (JOB NO. 06-0113)	–	–

DESCRIPTION: COVER PLATE DETAILS
MASSAC COUNTY, ILLINOIS

SCALE:	DRAWN BY:	CHECKED BY:	DATE:	BRIDGE SHEET:
N.T.S.	RES	TKE	6/13/13	28 OF 31

PROJECT NUMBER	PRODUCT CODE	RELEASE	SHEET
40606	1021	1	28

MK	QTY	DESCRIPTION	MATERIAL	LENGTH	REMARKS	REV
1A	1	"D-160" MODULAR EXPANSION JOINT			32'-6"	
1a1	1	EDGE BEAM 1.25"X4"	A709 GR 50 OR 50W	15'-10 1/2	A123-HDG	
1a2	1	EDGE BEAM 1.25"X4"	A709 GR 50 OR 50W	15'-10 1/2	A123-HDG	
1a3	1	EDGE BEAM 1.25"X4"	A709 GR 50 OR 50W	15'-10 1/2	A123-HDG	
1a4	1	EDGE BEAM 1.25"X4"	A709 GR 50 OR 50W	15'-10 1/2	A123-HDG	
1a5	1	CENTER BEAM 2.5"X5"	A709 GR 50 OR 50W	16'-3	A123-HDG	
1a6	1	CENTER BEAM 2.5"X5"	A709 GR 50 OR 50W	16'-3	A123-HDG	
2f1	20	5/8 X 3 1/4	A36	0'-5 1/2	ACCESS PLATE (SHAPE CUT); A123-HDG	
2f2	40	Ø5/8 X 3 1/2 SQUARE HEAD CAP SCREW	A307 GR A		ACCESS PLATE ITEM; B695-MG	
2f3	40	Ø5/8 HEX NUT	A563 GR A		ACCESS PLATE ITEM; B695-MG	
2f4	40	Ø5/8 FLAT WASHER	F844		ACCESS PLATE ITEM; B695-MG	
2f5	40	Ø5/8 LOCK WASHER	F844		ACCESS PLATE ITEM; B695-MG	
2h1	20	CONTROL SPRING (80MM)	-		PLAIN	
2h2	20	NYLON PIN (80MM)	-		PLAIN	
2h3	40	HITCH PIN	-		PLAIN	
2k1	20	PRECOMPRESSED SPRING	-		PLAIN	
2k2	20	SLIDE BEARING	-		PLAIN	
3g1	3	1/2 X 6	A36	1'-4	JOINT SUPPORT PLATE; A123-HDG	
5b1	74	Ø5/8 X 6 WELD STUD	A108		EDGE BEAM ANCHORAGE; A123-HDG	
5b2	52	Ø5/8 X 6 WELD STUD	A108		EDGE BEAM ANCHORAGE (BEND 45 DEGREES @ 2"); A123-HDG	
6sa1	20	HSS 9 X 7 X 3/8	A500 GR B	0'-7 3/8	SUPPORT BOX; A123-HDG	
6sa2	40	HSS 1 X 1 X 1/8	A513	0'-1 1/2	SUPPORT BOX ITEM; A123-HDG	
6sa3	20	SUPPORT BOX END CAP	A1011 GR 36 (GALV.) OR HDPE		PLAIN	
6sa4	40	Ø5/8 X 4 WELD STUD	A108		SUPPORT BOX ANCHORAGE; A123-HDG	
6sa5	54	Ø5/8 X 1 1/2 THREADED STUD	A108		HDG W/ JOINT;	
6sa6	40	Ø3/4 X 3/8 PLAIN ROD	A36		A123-HDG	
7sb1	10	1 1/2 X 5 3/4	A709 GR 50 OR 50W	1'-5 3/4	SUPPORT BAR - MACHINE TO DETAILED DIMS.; A123-HDG	
7sb2	40	16 GA. X 2 1/8	A240 T304, 2B	0'-6 1/4	SUPPORT BAR SHIM; PLAIN	
7sb3	20	5/8 X 2 1/2	A36	0'-3	SPRING STOP; A123-HDG	
8t1	10	L4 X 4 X 1/2	A36	1'-3	TEMPERATURE ADJUSTMENT ITEM; PAINT	
8t2	10	L6 X 4 X 1/2	A36	1'-3	TEMPERATURE ADJUSTMENT ITEM; PAINT	
8t3	40	Ø5/8 HEX NUT	A563 GR A		TEMPERATURE ADJUSTMENT ITEM; ZINC PLATED	
8t4	40	Ø5/8 FLAT WASHER	F844		TEMPERATURE ADJUSTMENT ITEM; ZINC PLATED	
8t5	16	Ø1 X 30 THREADED ROD	A709 GR 36		TEMPERATURE ADJUSTMENT ITEM; ZINC PLATED	
8t6	64	Ø1 HEX NUT	A563 GR A		TEMPERATURE ADJUSTMENT ITEM; ZINC PLATED	
8t7	64	Ø1 FLAT WASHER	F844		TEMPERATURE ADJUSTMENT ITEM; ZINC PLATED	

MK	QTY	DESCRIPTION	MATERIAL	LENGTH	REMARKS	REV
1B	1	"D-160" MODULAR EXPANSION JOINT			16'-1 15/16"	
1a7	1	EDGE BEAM 1.25"X4"	A709 GR 50 OR 50W	1'-1 1/16	A123-HDG	
1a8	1	EDGE BEAM 1.25"X4"	A709 GR 50 OR 50W	1'-1 1/16	A123-HDG	
1a9	1	EDGE BEAM 1.25"X4"	A709 GR 50 OR 50W	14'-9 5/8	A123-HDG	
1a10	1	EDGE BEAM 1.25"X4"	A709 GR 50 OR 50W	14'-9 5/8	A123-HDG	
1a11	1	CENTER BEAM 2.5"X5"	A709 GR 50 OR 50W	1'-1 5/16	A123-HDG	
1a12	1	CENTER BEAM 2.5"X5"	A709 GR 50 OR 50W	15'-2 3/8	A123-HDG	
2f1	8	5/8 X 3 1/4	A36	0'-5 1/2	ACCESS PLATE (SHAPE CUT); A123-HDG	
2f2	16	Ø5/8 X 3 1/2 SQUARE HEAD CAP SCREW	A307 GR A		ACCESS PLATE ITEM; B695-MG	
2f3	16	Ø5/8 HEX NUT	A563 GR A		ACCESS PLATE ITEM; B695-MG	
2f4	16	Ø5/8 FLAT WASHER	F844		ACCESS PLATE ITEM; B695-MG	
2f5	16	Ø5/8 LOCK WASHER	F844		ACCESS PLATE ITEM; B695-MG	
2h1	8	CONTROL SPRING (80MM)	-		PLAIN	
2h2	8	NYLON PIN (80MM)	-		PLAIN	
2h3	16	HITCH PIN	-		PLAIN	
2k1	8	PRECOMPRESSED SPRING	-		PLAIN	
2k2	8	SLIDE BEARING	-		PLAIN	
3g1	2	1/2 X 6	A36	1'-4	JOINT SUPPORT PLATE; A123-HDG	
5b1	43	Ø5/8 X 6 WELD STUD	A108		EDGE BEAM ANCHORAGE; A123-HDG	
5b2	23	Ø5/8 X 6 WELD STUD	A108		EDGE BEAM ANCHORAGE (BEND 45 DEGREES @ 2"); A123-HDG	
6sa1	8	HSS 9 X 7 X 3/8	A500 GR B	0'-7 3/8	SUPPORT BOX; A123-HDG	
6sa2	16	HSS 1 X 1 X 1/8	A513	0'-1 1/2	SUPPORT BOX ITEM; A123-HDG	
6sa3	8	SUPPORT BOX END CAP	A1011 GR 36 (GALV.) OR HDPE		PLAIN	
6sa4	16	Ø5/8 X 4 WELD STUD	A108		SUPPORT BOX ANCHORAGE; A123-HDG	
6sa5	20	Ø5/8 X 1 1/2 THREADED STUD	A108		HDG W/ JOINT;	
6sa6	16	Ø3/4 X 3/8 PLAIN ROD	A36		A123-HDG	
7sb1	4	1 1/2 X 5 3/4	A709 GR 50 OR 50W	1'-5 3/4	SUPPORT BAR - MACHINE TO DETAILED DIMS.; A123-HDG	
7sb2	16	16 GA. X 2 1/8	A240 T304, 2B	0'-6 1/4	SUPPORT BAR SHIM; PLAIN	
7sb3	8	5/8 X 2 1/2	A36	0'-3	SPRING STOP; A123-HDG	
8t1	4	L4 X 4 X 1/2	A36	1'-3	TEMPERATURE ADJUSTMENT ITEM; PAINT	
8t2	4	L6 X 4 X 1/2	A36	1'-3	TEMPERATURE ADJUSTMENT ITEM; PAINT	
8t3	16	Ø5/8 HEX NUT	A563 GR A		TEMPERATURE ADJUSTMENT ITEM; ZINC PLATED	
8t4	16	Ø5/8 FLAT WASHER	F844		TEMPERATURE ADJUSTMENT ITEM; ZINC PLATED	
8t5	7	Ø1 X 30 THREADED ROD	A709 GR 36		TEMPERATURE ADJUSTMENT ITEM; ZINC PLATED	
8t6	28	Ø1 HEX NUT	A563 GR A		TEMPERATURE ADJUSTMENT ITEM; ZINC PLATED	
8t7	28	Ø1 FLAT WASHER	F844		TEMPERATURE ADJUSTMENT ITEM; ZINC PLATED	

MK	QTY	DESCRIPTION	MATERIAL	LENGTH	REMARKS	REV
1C	1	"D-160" MODULAR EXPANSION JOINT			16'-1 15/16"	
1a7	1	EDGE BEAM 1.25"X4"	A709 GR 50 OR 50W	1'-1 1/16	A123-HDG	
1a8	1	EDGE BEAM 1.25"X4"	A709 GR 50 OR 50W	1'-1 1/16	A123-HDG	
1a11	1	CENTER BEAM 2.5"X5"	A709 GR 50 OR 50W	1'-1 5/16	A123-HDG	
1a13	1	EDGE BEAM 1.25"X4"	A709 GR 50 OR 50W	14'-9 5/8	A123-HDG	
1a14	1	EDGE BEAM 1.25"X4"	A709 GR 50 OR 50W	14'-9 5/8	A123-HDG	
1a15	1	CENTER BEAM 2.5"X5"	A709 GR 50 OR 50W	15'-2 3/8	A123-HDG	
2f1	8	5/8 X 3 1/4	A36	0'-5 1/2	ACCESS PLATE (SHAPE CUT); A123-HDG	
2f2	16	Ø5/8 X 3 1/2 SQUARE HEAD CAP SCREW	A307 GR A		ACCESS PLATE ITEM; B695-MG	
2f3	16	Ø5/8 HEX NUT	A563 GR A		ACCESS PLATE ITEM; B695-MG	
2f4	16	Ø5/8 FLAT WASHER	F844		ACCESS PLATE ITEM; B695-MG	
2f5	16	Ø5/8 LOCK WASHER	F844		ACCESS PLATE ITEM; B695-MG	
2h1	8	CONTROL SPRING (80MM)	-		PLAIN	
2h2	8	NYLON PIN (80MM)	-		PLAIN	
2h3	16	HITCH PIN	-		PLAIN	
2k1	8	PRECOMPRESSED SPRING	-		PLAIN	
2k2	8	SLIDE BEARING	-		PLAIN	
3g1	2	1/2 X 6	A36	1'-4	JOINT SUPPORT PLATE; A123-HDG	
5b1	42	Ø5/8 X 6 WELD STUD	A108		EDGE BEAM ANCHORAGE; A123-HDG	
5b2	24	Ø5/8 X 6 WELD STUD	A108		EDGE BEAM ANCHORAGE (BEND 45 DEGREES @ 2"); A123-HDG	
6sa1	8	HSS 9 X 7 X 3/8	A500 GR B	0'-7 3/8	SUPPORT BOX; A123-HDG	
6sa2	16	HSS 1 X 1 X 1/8	A513	0'-1 1/2	SUPPORT BOX ITEM; A123-HDG	
6sa3	8	SUPPORT BOX END CAP	A1011 GR 36 (GALV.) OR HDPE		PLAIN	
6sa4	16	Ø5/8 X 4 WELD STUD	A108		SUPPORT BOX ANCHORAGE; A123-HDG	
6sa5	20	Ø5/8 X 1 1/2 THREADED STUD	A108		HDG W/ JOINT;	
6sa6	16	Ø3/4 X 3/8 PLAIN ROD	A36		A123-HDG	
7sb1	4	1 1/2 X 5 3/4	A709 GR 50 OR 50W	1'-5 3/4	SUPPORT BAR - MACHINE TO DETAILED DIMS.; A123-HDG	
7sb2	16	16 GA. X 2 1/8	A240 T304, 2B	0'-6 1/4	SUPPORT BAR SHIM; PLAIN	
7sb3	8	5/8 X 2 1/2	A36	0'-3	SPRING STOP; A123-HDG	
8t1	4	L4 X 4 X 1/2	A36	1'-3	TEMPERATURE ADJUSTMENT ITEM; PAINT	
8t2	4	L6 X 4 X 1/2	A36	1'-3	TEMPERATURE ADJUSTMENT ITEM; PAINT	
8t3	16	Ø5/8 HEX NUT	A563 GR A		TEMPERATURE ADJUSTMENT ITEM; ZINC PLATED	
8t4	16	Ø5/8 FLAT WASHER	F844		TEMPERATURE ADJUSTMENT ITEM; ZINC PLATED	
8t5	7	Ø1 X 30 THREADED ROD	A709 GR 36		TEMPERATURE ADJUSTMENT ITEM; ZINC PLATED	
8t6	28	Ø1 HEX NUT	A563 GR A		TEMPERATURE ADJUSTMENT ITEM; ZINC PLATED	
8t7	28	Ø1 FLAT WASHER	F844		TEMPERATURE ADJUSTMENT ITEM; ZINC PLATED	
1D	4	EDGE BEAM FIELD SPLICE PIECE			0'-9"	
1a16	4	EDGE BEAM 1.25"X4"	A709 GR 50 OR 50W	0'-9	A123-HDG	
5b1	4	Ø5/8 X 6 WELD STUD	A108		EDGE BEAM ANCHORAGE; A123-HDG	
5b2	4	Ø5/8 X 6 WELD STUD	A108		EDGE BEAM ANCHORAGE (BEND 45 DEGREES @ 2"); A123-HDG	
1YA	1	LUBRICANT ADHESIVE (1 GAL. UNIT)				
1y1	1	LUBRICANT ADHESIVE (1 GAL. UNIT)	D4070			
1YB	2	L2-400 STRIP SEAL				
1y2	2	L2-400 GLAND	NEOPRENE	66'-0	132'-0" TOTAL;	
					7/2/2013 6:44:18 AM	

MK	QTY	DESCRIPTION	MATERIAL	LENGTH	REMARKS	REV
2GA	18	JOINT SUPPORT ITEM - ANGLE				
2g1	18	L7 X 4 X 1/2	A36	0'-4	A123-HDG	
2GB	2	JOINT SUPPORT ITEM - SUPPORT PLATE				
2g2	2	1/2 X 4	A36	1'-3	A123-HDG	
2GC	2	JOINT SUPPORT ITEM - BENT PLATE				
2g3	2	1/2 X 7	A36	1'-3	A123-HDG	
2XA	22	JOINT SUPPORT HARDWARE - HEX NUT				
2x1	22	Ø5/8 HEX NUT	A563 GR A		A153-HDG	
2XB	22	JOINT SUPPORT HARDWARE - FLAT WASHER				
2x2	22	Ø5/8 FLAT WASHER	F844		A153-HDG	
2XC	18	JOINT SUPPORT HARDWARE - CONCRETE INSERT				
2x3	18	Ø5/8 X 4 1/4 CONCRETE EXPANSION ANCHOR	CONCRETE INSERT		RAMSET/REDHEAD HN-5842 OR EQ.; PLAIN	
					7/2/2013 6:44:18 AM	

MK	QTY	DESCRIPTION	MATERIAL	LENGTH	REMARKS	REV
3GA	5	JOINT SUPPORT ITEM - ANGLE				
3g2	5	L7 X 4 X 1/2	A36	0'-7	A123-HDG	
3GB	2	JOINT SUPPORT ITEM - BENT PLATE				
3g3	2	1/2 X 7	A36	1'-1	A123-HDG	
3XA	18	JOINT SUPPORT HARDWARE - HEX BOLT				
3x1	18	Ø3/4 X 2 1/2 HEX HEAD BOLT	A325		A153-HDG	
3XB	18	JOINT SUPPORT HARDWARE - HEX NUT				
3x2	18	Ø3/4 HEX NUT	A563 DH		A153-HDG	
3XC	36	JOINT SUPPORT HARDWARE - FLAT WASHER				
3x3	36	Ø3/4 FLAT WASHER	F436		A153-HDG	
					7/2/2013 6:44:18 AM	

APPROVED
For Main Dimensions and Materials Only
AUG 27 2013
Engineer of Bridge & Traffic Structures

REV.	DESCRIPTION	DATE	DET.	CKD.

D.S. BROWN
A GIBRALTAR INDUSTRIES COMPANY
THE D.S. BROWN COMPANY
300 E. CHERRY STREET
NORTH BALTIMORE, OHIO 45872
419.257.3561
FAX: 419.257.0332
WWW.DSBROWN.COM

	ITEM	QUANTITY
LOCATION — I-24 OVER THE OHIO RIVER	-	-
STRUCTURE NO. — 064-0035	-	-
ROUTE — FAI ROUTE 24 (I-24)	-	-
SECTION — BSMART 2013-1	-	-
CONTRACT NO. — 78293 DISTRICT NO. — 9	-	-
P.O. NO. — 7838	-	-
DESIGNER — ILLINOIS DEPARTMENT OF TRANSPORTATION	-	-
CUSTOMER — HENNEGAN & ASSOCIATES (JOB NO. 06-0113)	-	-

DESCRIPTION:	SCALE:	DRAWN BY:	CHECKED BY:	DATE:	BRIDGE SHEET:
BILL OF MATERIALS MASSAC COUNTY, ILLINOIS	N.T.S.	RES	JLW	6/13/13	29 OF 31
	PROJECT NUMBER: 40606	PRODUCT CODE: 1021	RELEASE: 1	SHEET: 29	

MK	QTY	DESCRIPTION	MATERIAL	LENGTH	REMARKS	REV
9A	1	"D-240" MODULAR EXPANSION JOINT			32'-6"	
9a1	1	EDGE BEAM 1.25"X4"	A709 GR 50 OR 50W	15'-10 1/2	A123-HDG	
9a2	1	EDGE BEAM 1.25"X4"	A709 GR 50 OR 50W	15'-10 1/2	A123-HDG	
9a3	1	EDGE BEAM 1.25"X4"	A709 GR 50 OR 50W	15'-10 1/2	A123-HDG	
9a4	1	EDGE BEAM 1.25"X4"	A709 GR 50 OR 50W	15'-10 1/2	A123-HDG	
9a5	2	CENTER BEAM 2.5"X5"	A709 GR 50 OR 50W	16'-3	A123-HDG	
9a6	2	CENTER BEAM 2.5"X5"	A709 GR 50 OR 50W	16'-3	A123-HDG	
10f1	20	5/8 X 3 1/4	A36	0'-5 1/2	ACCESS PLATE (SHAPE CUT); A123-HDG	
10f2	40	Ø5/8 X 3 1/2 SQUARE HEAD CAP SCREW	A307 GR A		ACCESS PLATE ITEM; B695-MG	
10f3	40	Ø5/8 HEX NUT	A563 GR A		ACCESS PLATE ITEM; B695-MG	
10f4	40	Ø5/8 FLAT WASHER	F844		ACCESS PLATE ITEM; B695-MG	
10f5	40	Ø5/8 LOCK WASHER	F844		ACCESS PLATE ITEM; B695-MG	
10h1	30	CONTROL SPRING (80MM)	-		PLAIN	
10h2	30	NYLON PIN (80MM)	-		PLAIN	
10h3	60	HITCH PIN	-		PLAIN	
10k1	40	PRECOMPRESSED SPRING	-		PLAIN	
10k2	40	SLIDE BEARING	-		PLAIN	
11g1	7	1/2 X 6	A36	1'-0	JOINT SUPPORT PLATE; A123-HDG	
13b1	78	Ø5/8 X 6 WELD STUD	A108		EDGE BEAM ANCHORAGE; A123-HDG	
13b2	38	Ø5/8 X 6 WELD STUD	A108		EDGE BEAM ANCHORAGE (BEND 45 DEGREES @ 2"); A123-HDG	
14sa1	20	HSS 9 X 7 X 3/8	A500 GR B	0'-7 3/8	SUPPORT BOX; A123-HDG	
14sa2	20	HSS 9 X 7 X 3/8	A500 GR B	0'-10 1/2	SUPPORT BOX; A123-HDG	
14sa3	40	HSS 1 X 1 X 1/8	A513	0'-1 1/2	SUPPORT BOX ITEM; A123-HDG	
14sa4	40	SUPPORT BOX END CAP	A1011 GR 36 (GALV.) OR HDPE		PLAIN	
14sa5	60	Ø5/8 X 4 WELD STUD	A108		SUPPORT BOX ANCHORAGE; A123-HDG	
14sa6	50	Ø5/8 X 1 1/2 THREADED STUD	A108		HDG W/ JOINT;	
14sa7	80	Ø3/4 X 3/8 PLAIN ROD	A36		A123-HDG	
15sb1	20	1 3/4 X 5 3/4	A709 GR 50 OR 50W	1'-11 1/2	SUPPORT BAR - MACHINE TO DETAILED DIMS.; A123-HDG	
15sb2	40	16 GA. X 2 3/8	A240 T304, 2B	0'-6 1/4	SUPPORT BAR SHIM; PLAIN	
15sb3	40	16 GA. X 2 3/8	A240 T304, 2B	0'-9 5/8	SUPPORT BAR SHIM; PLAIN	
15sb4	40	5/8 X 2 1/2	A36	0'-2 7/8	SPRING STOP; A123-HDG	
16t1	10	L4 X 4 X 1/2	A36	1'-3	TEMPERATURE ADJUSTMENT ITEM; PAINT	
16t2	10	L4 X 4 X 1/2	A36	1'-3	TEMPERATURE ADJUSTMENT ITEM; PAINT	
16t3	40	Ø5/8 HEX NUT	A563 GR A		TEMPERATURE ADJUSTMENT ITEM; ZINC PLATED	
16t4	40	Ø5/8 FLAT WASHER	F844		TEMPERATURE ADJUSTMENT ITEM; ZINC PLATED	
16t5	16	Ø1 X 26 THREADED ROD	A709 GR 36		TEMPERATURE ADJUSTMENT ITEM; ZINC PLATED	
16t6	64	Ø1 HEX NUT	A563 GR A		TEMPERATURE ADJUSTMENT ITEM; ZINC PLATED	
16t7	64	Ø1 FLAT WASHER	F844		TEMPERATURE ADJUSTMENT ITEM; ZINC PLATED	

MK	QTY	DESCRIPTION	MATERIAL	LENGTH	REMARKS	REV
9B	1	"D-240" MODULAR EXPANSION JOINT			16'-1 15/16"	
9a7	1	EDGE BEAM 1.25"X4"	A709 GR 50 OR 50W	1'-1 1/16	A123-HDG	
9a8	1	EDGE BEAM 1.25"X4"	A709 GR 50 OR 50W	1'-1 1/16	A123-HDG	
9a9	1	EDGE BEAM 1.25"X4"	A709 GR 50 OR 50W	14'-9 5/8	A123-HDG	
9a10	1	EDGE BEAM 1.25"X4"	A709 GR 50 OR 50W	14'-9 5/8	A123-HDG	
9a11	2	CENTER BEAM 2.5"X5"	A709 GR 50 OR 50W	1'-1 5/16	A123-HDG	
9a12	2	CENTER BEAM 2.5"X5"	A709 GR 50 OR 50W	15'-2 3/8	A123-HDG	
10f1	8	5/8 X 3 1/4	A36	0'-5 1/2	ACCESS PLATE (SHAPE CUT); A123-HDG	
10f2	16	Ø5/8 X 3 1/2 SQUARE HEAD CAP SCREW	A307 GR A		ACCESS PLATE ITEM; B695-MG	
10f3	16	Ø5/8 HEX NUT	A563 GR A		ACCESS PLATE ITEM; B695-MG	
10f4	16	Ø5/8 FLAT WASHER	F844		ACCESS PLATE ITEM; B695-MG	
10f5	16	Ø5/8 LOCK WASHER	F844		ACCESS PLATE ITEM; B695-MG	
10h1	12	CONTROL SPRING (80MM)	-		PLAIN	
10h2	12	NYLON PIN (80MM)	-		PLAIN	
10h3	24	HITCH PIN	-		PLAIN	
10k1	16	PRECOMPRESSED SPRING	-		PLAIN	
10k2	16	SLIDE BEARING	-		PLAIN	
11g1	3	1/2 X 6	A36	1'-0	JOINT SUPPORT PLATE; A123-HDG	
13b1	42	Ø5/8 X 6 WELD STUD	A108		EDGE BEAM ANCHORAGE; A123-HDG	
13b2	15	Ø5/8 X 6 WELD STUD	A108		EDGE BEAM ANCHORAGE (BEND 45 DEGREES @ 2"); A123-HDG	
14sa1	8	HSS 9 X 7 X 3/8	A500 GR B	0'-7 3/8	SUPPORT BOX; A123-HDG	
14sa2	8	HSS 9 X 7 X 3/8	A500 GR B	0'-10 1/2	SUPPORT BOX; A123-HDG	
14sa3	16	HSS 1 X 1 X 1/8	A513	0'-1 1/2	SUPPORT BOX ITEM; A123-HDG	
14sa4	16	SUPPORT BOX END CAP	A1011 GR 36 (GALV.) OR HDPE		PLAIN	
14sa5	24	Ø5/8 X 4 WELD STUD	A108		SUPPORT BOX ANCHORAGE; A123-HDG	
14sa6	20	Ø5/8 X 1 1/2 THREADED STUD	A108		HDG W/ JOINT;	
14sa7	32	Ø3/4 X 3/8 PLAIN ROD	A36		A123-HDG	
15sb1	8	1 3/4 X 5 3/4	A709 GR 50 OR 50W	1'-11 1/2	SUPPORT BAR - MACHINE TO DETAILED DIMS.; A123-HDG	
15sb2	16	16 GA. X 2 3/8	A240 T304, 2B	0'-6 1/4	SUPPORT BAR SHIM; PLAIN	
15sb3	16	16 GA. X 2 3/8	A240 T304, 2B	0'-9 5/8	SUPPORT BAR SHIM; PLAIN	
15sb4	16	5/8 X 2 1/2	A36	0'-2 7/8	SPRING STOP; A123-HDG	
16t1	4	L4 X 4 X 1/2	A36	1'-3	TEMPERATURE ADJUSTMENT ITEM; PAINT	
16t2	4	L4 X 4 X 1/2	A36	1'-3	TEMPERATURE ADJUSTMENT ITEM; PAINT	
16t3	16	Ø5/8 HEX NUT	A563 GR A		TEMPERATURE ADJUSTMENT ITEM; ZINC PLATED	
16t4	16	Ø5/8 FLAT WASHER	F844		TEMPERATURE ADJUSTMENT ITEM; ZINC PLATED	
16t5	7	Ø1 X 26 THREADED ROD	A709 GR 36		TEMPERATURE ADJUSTMENT ITEM; ZINC PLATED	
16t6	28	Ø1 HEX NUT	A563 GR A		TEMPERATURE ADJUSTMENT ITEM; ZINC PLATED	
16t7	28	Ø1 FLAT WASHER	F844		TEMPERATURE ADJUSTMENT ITEM; ZINC PLATED	

MK	QTY	DESCRIPTION	MATERIAL	LENGTH	REMARKS	REV
9C	1	"D-240" MODULAR EXPANSION JOINT			16'-1 15/16"	
9a7	1	EDGE BEAM 1.25"X4"	A709 GR 50 OR 50W	1'-1 1/16	A123-HDG	
9a8	1	EDGE BEAM 1.25"X4"	A709 GR 50 OR 50W	1'-1 1/16	A123-HDG	
9a11	2	CENTER BEAM 2.5"X5"	A709 GR 50 OR 50W	1'-1 5/16	A123-HDG	
9a13	1	EDGE BEAM 1.25"X4"	A709 GR 50 OR 50W	14'-9 5/8	A123-HDG	
9a14	1	EDGE BEAM 1.25"X4"	A709 GR 50 OR 50W	14'-9 5/8	A123-HDG	
9a15	2	CENTER BEAM 2.5"X5"	A709 GR 50 OR 50W	15'-2 3/8	A123-HDG	
10f1	8	5/8 X 3 1/4	A36	0'-5 1/2	ACCESS PLATE (SHAPE CUT); A123-HDG	
10f2	16	Ø5/8 X 3 1/2 SQUARE HEAD CAP SCREW	A307 GR A		ACCESS PLATE ITEM; B695-MG	
10f3	16	Ø5/8 HEX NUT	A563 GR A		ACCESS PLATE ITEM; B695-MG	
10f4	16	Ø5/8 FLAT WASHER	F844		ACCESS PLATE ITEM; B695-MG	
10f5	16	Ø5/8 LOCK WASHER	F844		ACCESS PLATE ITEM; B695-MG	
10h1	12	CONTROL SPRING (80MM)	-		PLAIN	
10h2	12	NYLON PIN (80MM)	-		PLAIN	
10h3	24	HITCH PIN	-		PLAIN	
10k1	16	PRECOMPRESSED SPRING	-		PLAIN	
10k2	16	SLIDE BEARING	-		PLAIN	
11g1	3	1/2 X 6	A36	1'-0	JOINT SUPPORT PLATE; A123-HDG	
13b1	43	Ø5/8 X 6 WELD STUD	A108		EDGE BEAM ANCHORAGE; A123-HDG	
13b2	15	Ø5/8 X 6 WELD STUD	A108		EDGE BEAM ANCHORAGE (BEND 45 DEGREES @ 2"); A123-HDG	
14sa1	8	HSS 9 X 7 X 3/8	A500 GR B	0'-7 3/8	SUPPORT BOX; A123-HDG	
14sa2	8	HSS 9 X 7 X 3/8	A500 GR B	0'-10 1/2	SUPPORT BOX; A123-HDG	
14sa3	16	HSS 1 X 1 X 1/8	A513	0'-1 1/2	SUPPORT BOX ITEM; A123-HDG	
14sa4	16	SUPPORT BOX END CAP	A1011 GR 36 (GALV.) OR HDPE		PLAIN	
14sa5	24	Ø5/8 X 4 WELD STUD	A108		SUPPORT BOX ANCHORAGE; A123-HDG	
14sa6	20	Ø5/8 X 1 1/2 THREADED STUD	A108		HDG W/ JOINT;	
14sa7	32	Ø3/4 X 3/8 PLAIN ROD	A36		A123-HDG	
15sb1	8	1 3/4 X 5 3/4	A709 GR 50 OR 50W	1'-11 1/2	SUPPORT BAR - MACHINE TO DETAILED DIMS.; A123-HDG	
15sb2	16	16 GA. X 2 3/8	A240 T304, 2B	0'-6 1/4	SUPPORT BAR SHIM; PLAIN	
15sb3	16	16 GA. X 2 3/8	A240 T304, 2B	0'-9 5/8	SUPPORT BAR SHIM; PLAIN	
15sb4	16	5/8 X 2 1/2	A36	0'-2 7/8	SPRING STOP; A123-HDG	
16t1	4	L4 X 4 X 1/2	A36	1'-3	TEMPERATURE ADJUSTMENT ITEM; PAINT	
16t2	4	L4 X 4 X 1/2	A36	1'-3	TEMPERATURE ADJUSTMENT ITEM; PAINT	
16t3	16	Ø5/8 HEX NUT	A563 GR A		TEMPERATURE ADJUSTMENT ITEM; ZINC PLATED	
16t4	16	Ø5/8 FLAT WASHER	F844		TEMPERATURE ADJUSTMENT ITEM; ZINC PLATED	
16t5	7	Ø1 X 26 THREADED ROD	A709 GR 36		TEMPERATURE ADJUSTMENT ITEM; ZINC PLATED	
16t6	28	Ø1 HEX NUT	A563 GR A		TEMPERATURE ADJUSTMENT ITEM; ZINC PLATED	
16t7	28	Ø1 FLAT WASHER	F844		TEMPERATURE ADJUSTMENT ITEM; ZINC PLATED	
9D	4	EDGE BEAM FIELD SPLICE PIECE			0'-9"	
9a16	4	EDGE BEAM 1.25"X4"	A709 GR 50 OR 50W	0'-9	A123-HDG	
13b1	4	Ø5/8 X 6 WELD STUD	A108		EDGE BEAM ANCHORAGE; A123-HDG	
13b2	4	Ø5/8 X 6 WELD STUD	A108		EDGE BEAM ANCHORAGE (BEND 45 DEGREES @ 2"); A123-HDG	

MK	QTY	DESCRIPTION	MATERIAL	LENGTH	REMARKS	REV
9YA	2	LUBRICANT ADHESIVE (1 GAL. UNIT)				
9y1	2	LUBRICANT ADHESIVE (1 GAL. UNIT)	D4070			
9YB	3	L2-400 STRIP SEAL				
9y2	3	L2-400 GLAND	NEOPRENE	66'-0	198'-0" TOTAL;	
					7/2/2013 6:44:18 AM	

MK	QTY	DESCRIPTION	MATERIAL	LENGTH	REMARKS	REV
10GA	18	JOINT SUPPORT ITEM - ANGLE				
10g1	18	L7 X 4 X 1/2	A36	0'-4	A123-HDG	
10XA	18	JOINT SUPPORT HARDWARE - HEX NUT				
10x1	18	Ø5/8 HEX NUT	A563 GR A		A153-HDG	
10XB	18	JOINT SUPPORT HARDWARE - FLAT WASHER				
10x2	18	Ø5/8 X 4 1/4 CONCRETE EXPANSION ANCHOR	CONCRETE INSERT		RAMSET/REDHEAD HN-5842 OR EQ.; PLAIN	
					7/2/2013 6:44:18 AM	

MK	QTY	DESCRIPTION	MATERIAL	LENGTH	REMARKS	REV
11GA	5	JOINT SUPPORT ITEM - ANGLE				
11g2	5	L7 X 4 X 1/2	A36	0'-7	A123-HDG	
11GB	2	JOINT SUPPORT ITEM - BENT PLATE				
11g3	2	1/2 X 7	A36	1'-1	A123-HDG	
11GC	6	JOINT SUPPORT ITEM - BENT PLATE				
11g4	6	1/2 X 7	A36	1'-8 1/4	A123-HDG	
11XA	26	JOINT SUPPORT HARDWARE - HEX BOLT				
11x1	26	Ø3/4 X 2 1/2 HEX HEAD BOLT	A325		A153-HDG	
11XB	26	JOINT SUPPORT HARDWARE - HEX NUT				
11x2	26	Ø3/4 HEX NUT	A563 DH		A153-HDG	
11XC	52	JOINT SUPPORT HARDWARE - FLAT WASHER				
11x3	52	Ø3/4 FLAT WASHER	F436		A153-HDG	
					7/2/2013 6:44:18 AM	

APPROVED
For Main Dimensions and Materials Only
AUG 27 2013
R. Carl Lange
Engineer of Bridge & Traffic Structures

REV.	DESCRIPTION	DATE	DET.	CKD.

D.S. BROWN
A GIBRALTAR INDUSTRIES COMPANY
THE D.S. BROWN COMPANY
300 E. CHERRY STREET
NORTH BALTIMORE, OHIO 45872
419.257.3561
FAX: 419.257.0332
WWW.DSBROWN.COM

LOCATION — I-24 OVER THE OHIO RIVER
STRUCTURE NO. — 064-0035
ROUTE — FAI ROUTE 24 (I-24)
SECTION — BSMART 2013-1
CONTRACT NO. — 78293 DISTRICT NO. — 9
P.O. NO. — 7838
DESIGNER — ILLINOIS DEPARTMENT OF TRANSPORTATION
CUSTOMER — HENNEGAN & ASSOCIATES (JOB NO. 06-0113)

ITEM	QUANTITY
-	-
-	-
-	-
-	-
-	-
-	-
-	-
-	-
-	-

DESCRIPTION: BILL OF MATERIALS
MASSAC COUNTY, ILLINOIS

SCALE:	DRAWN BY:	CHECKED BY:	DATE:	BRIDGE SHEET:
N.T.S.	RES	JLW	6/13/13	30 OF 31
PROJECT NUMBER	PRODUCT CODE	RELEASE	SHEET	
40606	1021	1	30	

MK	QTY	DESCRIPTION	MATERIAL	LENGTH	REMARKS	REV
17CA	1	UPPER PARAPET COVER PLATE ASSEMBLY				
17cp1	1	1/2 X 26 3/8	A36	2'-4	COVER PLATE; A123-HDG	
17cp2	1	3/4 X 12	A36	2'-2	ANCHOR PLATE; A123-HDG	
17cp3	1	3/8 X 12	A36	2'-1 7/8	SLIDE PLATE; A123-HDG	
17x1	12	Ø3/4 X 6 WELD STUD	A108		A123-HDG	
17x2	6	Ø3/4 X 2 SCKT FLAT CTSK HD CAP SCREW	F835		B695-MG	
17x3	6	Ø3/4 HEX NUT	A563 GR A		WELD TO PLATE; PLAIN	
17x4	6	Ø3/4 PLASTIC COVER CAP	-		PLAIN	
17CB	1	LOWER PARAPET COVER PLATE ASSEMBLY				
17cp4	1	1/2 X 15	A36	2'-4	COVER PLATE; A123-HDG	
17cp5	1	3/4 X 12	A36	1'-2 7/16	ANCHOR PLATE; A123-HDG	
17cp6	1	3/8 X 12	A36	1'-2 3/8	SLIDE PLATE; A123-HDG	
17x1	8	Ø3/4 X 6 WELD STUD	A108		A123-HDG	
17x2	4	Ø3/4 X 2 SCKT FLAT CTSK HD CAP SCREW	F835		B695-MG	
17x3	4	Ø3/4 HEX NUT	A563 GR A		WELD TO PLATE; PLAIN	
17x4	4	Ø3/4 PLASTIC COVER CAP	-		PLAIN	
					7/2/2013 6:44:18 AM	

MK	QTY	DESCRIPTION	MATERIAL	LENGTH	REMARKS	REV
23CA	1	UPPER PARAPET COVER PLATE ASSEMBLY				
23cp1	1	1/2 X 26 3/8	A36	2'-6	COVER PLATE; A123-HDG	
23cp2	1	3/4 X 12	A36	2'-2	ANCHOR PLATE; A123-HDG	
23cp3	1	3/8 X 12	A36	2'-1 7/8	SLIDE PLATE; A123-HDG	
23x1	12	Ø3/4 X 6 WELD STUD	A108		A123-HDG	
23x2	6	Ø3/4 X 2 SCKT FLAT CTSK HD CAP SCREW	F835		B695-MG	
23x3	6	Ø3/4 HEX NUT	A563 GR A		WELD TO PLATE; PLAIN	
23x4	6	Ø3/4 PLASTIC COVER CAP	-		PLAIN	
23CB	1	LOWER PARAPET COVER PLATE ASSEMBLY				
23cp4	1	1/2 X 15	A36	2'-6	COVER PLATE; A123-HDG	
23cp5	1	3/4 X 12	A36	1'-2 7/16	ANCHOR PLATE; A123-HDG	
23cp6	1	3/8 X 12	A36	1'-2 3/8	SLIDE PLATE; A123-HDG	
23x1	8	Ø3/4 X 6 WELD STUD	A108		A123-HDG	
23x2	4	Ø3/4 X 2 SCKT FLAT CTSK HD CAP SCREW	F835		B695-MG	
23x3	4	Ø3/4 HEX NUT	A563 GR A		WELD TO PLATE; PLAIN	
23x4	4	Ø3/4 PLASTIC COVER CAP	-		PLAIN	
					7/2/2013 6:44:18 AM	

MK	QTY	DESCRIPTION	MATERIAL	LENGTH	REMARKS	REV
19CA	1	UPPER PARAPET COVER PLATE ASSEMBLY				
19cp1	1	1/2 X 26 3/8	A36	2'-4	COVER PLATE; A123-HDG	
19cp2	1	3/4 X 12	A36	2'-2	ANCHOR PLATE; A123-HDG	
19cp3	1	3/8 X 12	A36	2'-1 7/8	SLIDE PLATE; A123-HDG	
19x1	12	Ø3/4 X 6 WELD STUD	A108		A123-HDG	
19x2	6	Ø3/4 X 2 SCKT FLAT CTSK HD CAP SCREW	F835		B695-MG	
19x3	6	Ø3/4 HEX NUT	A563 GR A		WELD TO PLATE; PLAIN	
19x4	6	Ø3/4 PLASTIC COVER CAP	-		PLAIN	
19CB	1	LOWER PARAPET COVER PLATE ASSEMBLY				
19cp4	1	1/2 X 15	A36	2'-4	COVER PLATE; A123-HDG	
19cp5	1	3/4 X 12	A36	1'-2 7/16	ANCHOR PLATE; A123-HDG	
19cp6	1	3/8 X 12	A36	1'-2 3/8	SLIDE PLATE; A123-HDG	
19x1	8	Ø3/4 X 6 WELD STUD	A108		A123-HDG	
19x2	4	Ø3/4 X 2 SCKT FLAT CTSK HD CAP SCREW	F835		B695-MG	
19x3	4	Ø3/4 HEX NUT	A563 GR A		WELD TO PLATE; PLAIN	
19x4	4	Ø3/4 PLASTIC COVER CAP	-		PLAIN	
					7/2/2013 6:44:18 AM	

MK	QTY	DESCRIPTION	MATERIAL	LENGTH	REMARKS	REV
25CA	1	UPPER PARAPET COVER PLATE ASSEMBLY				
25cp1	1	1/2 X 26 3/8	A36	2'-6	COVER PLATE; A123-HDG	
25cp2	1	3/4 X 12	A36	2'-2	ANCHOR PLATE; A123-HDG	
25cp3	1	3/8 X 12	A36	2'-1 7/8	SLIDE PLATE; A123-HDG	
25x1	12	Ø3/4 X 6 WELD STUD	A108		A123-HDG	
25x2	6	Ø3/4 X 2 SCKT FLAT CTSK HD CAP SCREW	F835		B695-MG	
25x3	6	Ø3/4 HEX NUT	A563 GR A		WELD TO PLATE; PLAIN	
25x4	6	Ø3/4 PLASTIC COVER CAP	-		PLAIN	
25CB	1	LOWER PARAPET COVER PLATE ASSEMBLY				
25cp4	1	1/2 X 15	A36	2'-6	COVER PLATE; A123-HDG	
25cp5	1	3/4 X 12	A36	1'-2 7/16	ANCHOR PLATE; A123-HDG	
25cp6	1	3/8 X 12	A36	1'-2 3/8	SLIDE PLATE; A123-HDG	
25x1	8	Ø3/4 X 6 WELD STUD	A108		A123-HDG	
25x2	4	Ø3/4 X 2 SCKT FLAT CTSK HD CAP SCREW	F835		B695-MG	
25x3	4	Ø3/4 HEX NUT	A563 GR A		WELD TO PLATE; PLAIN	
25x4	4	Ø3/4 PLASTIC COVER CAP	-		PLAIN	
					7/2/2013 6:44:18 AM	

MK	QTY	DESCRIPTION	MATERIAL	LENGTH	REMARKS	REV
21CA	1	UPPER MEDIAN COVER PLATE ASSEMBLY				
21cp1	1	1/2 X 28	A36	2'-5 7/8	COVER PLATE; A123-HDG	
21cp2	1	1/2 X 28	A36	2'-5 7/8	COVER PLATE; A123-HDG	
21cp3	1	3/4 X 12	A36	2'-5 1/2	ANCHOR PLATE; A123-HDG	
21cp4	1	3/4 X 12	A36	2'-5 1/2	ANCHOR PLATE; A123-HDG	
21cp5	1	3/8 X 12	A36	2'-5 3/8	SLIDE PLATE; A123-HDG	
21cp6	1	3/8 X 12	A36	2'-5 3/8	SLIDE PLATE; A123-HDG	
21x1	20	Ø3/4 X 6 WELD STUD	A108		A123-HDG	
21x2	12	Ø3/4 X 2 SCKT FLAT CTSK HD CAP SCREW	F835		B695-MG	
21x3	12	Ø3/4 HEX NUT	A563 GR A		WELD TO PLATE; PLAIN	
21x4	12	Ø3/4 PLASTIC COVER CAP	-		PLAIN	
21CB	1	LOWER MEDIAN COVER PLATE ASSEMBLY				
21cp7	1	1/2 X 15	A36	2'-4	COVER PLATE; A123-HDG	
21cp8	1	3/4 X 12	A36	1'-2 7/16	ANCHOR PLATE; A123-HDG	
21cp9	1	3/8 X 12	A36	1'-2 3/8	SLIDE PLATE; A123-HDG	
21x1	8	Ø3/4 X 6 WELD STUD	A108		A123-HDG	
21x2	4	Ø3/4 X 2 SCKT FLAT CTSK HD CAP SCREW	F835		B695-MG	
21x3	4	Ø3/4 HEX NUT	A563 GR A		WELD TO PLATE; PLAIN	
21x4	4	Ø3/4 PLASTIC COVER CAP	-		PLAIN	
21CC	1	LOWER MEDIAN COVER PLATE ASSEMBLY				
21cp8	1	3/4 X 12	A36	1'-2 7/16	ANCHOR PLATE; A123-HDG	
21cp9	1	3/8 X 12	A36	1'-2 3/8	SLIDE PLATE; A123-HDG	
21cp10	1	1/2 X 15	A36	2'-4	COVER PLATE; A123-HDG	
21x1	8	Ø3/4 X 6 WELD STUD	A108		A123-HDG	
21x2	4	Ø3/4 X 2 SCKT FLAT CTSK HD CAP SCREW	F835		B695-MG	
21x3	4	Ø3/4 HEX NUT	A563 GR A		WELD TO PLATE; PLAIN	
21x4	4	Ø3/4 PLASTIC COVER CAP	-		PLAIN	
					7/2/2013 6:44:18 AM	

MK	QTY	DESCRIPTION	MATERIAL	LENGTH	REMARKS	REV
27CA	1	UPPER MEDIAN COVER PLATE ASSEMBLY				
27cp1	1	1/2 X 29 7/8	A36	2'-6	COVER PLATE; A123-HDG	
27cp2	1	1/2 X 29 7/8	A36	2'-6	COVER PLATE; A123-HDG	
27cp3	1	3/4 X 12	A36	2'-5 1/2	ANCHOR PLATE; A123-HDG	
27cp4	1	3/4 X 12	A36	2'-5 1/2	ANCHOR PLATE; A123-HDG	
27cp5	1	3/8 X 12	A36	2'-5 3/8	SLIDE PLATE; A123-HDG	
27cp6	1	3/8 X 12	A36	2'-5 3/8	SLIDE PLATE; A123-HDG	
27x1	20	Ø3/4 X 6 WELD STUD	A108		A123-HDG	
27x2	12	Ø3/4 X 2 SCKT FLAT CTSK HD CAP SCREW	F835		B695-MG	
27x3	12	Ø3/4 HEX NUT	A563 GR A		WELD TO PLATE; PLAIN	
27x4	12	Ø3/4 PLASTIC COVER CAP	-		PLAIN	
27CB	1	LOWER MEDIAN COVER PLATE ASSEMBLY				
27cp7	1	1/2 X 15	A36	2'-6	COVER PLATE; A123-HDG	
27cp8	1	3/4 X 12	A36	1'-2 7/16	ANCHOR PLATE; A123-HDG	
27cp9	1	3/8 X 12	A36	1'-2 3/8	SLIDE PLATE; A123-HDG	
27x1	8	Ø3/4 X 6 WELD STUD	A108		A123-HDG	
27x2	4	Ø3/4 X 2 SCKT FLAT CTSK HD CAP SCREW	F835		B695-MG	
27x3	4	Ø3/4 HEX NUT	A563 GR A		WELD TO PLATE; PLAIN	
27x4	4	Ø3/4 PLASTIC COVER CAP	-		PLAIN	
27CC	1	LOWER MEDIAN COVER PLATE ASSEMBLY				
27cp8	1	3/4 X 12	A36	1'-2 7/16	ANCHOR PLATE; A123-HDG	
27cp9	1	3/8 X 12	A36	1'-2 3/8	SLIDE PLATE; A123-HDG	
27cp10	1	1/2 X 15	A36	2'-6	COVER PLATE; A123-HDG	
27x1	8	Ø3/4 X 6 WELD STUD	A108		A123-HDG	
27x2	4	Ø3/4 X 2 SCKT FLAT CTSK HD CAP SCREW	F835		B695-MG	
27x3	4	Ø3/4 HEX NUT	A563 GR A		WELD TO PLATE; PLAIN	
27x4	4	Ø3/4 PLASTIC COVER CAP	-		PLAIN	
					7/2/2013 6:44:18 AM	

APPROVED
For Main Dimensions and Materials Only
AUG 27 2013
D. Carl Fungy
Engineer of Bridge & Truss Structures

REV.	DESCRIPTION	DATE	DET.	CKD.

D.S. BROWN
A GIBRALTAR INDUSTRIES COMPANY
THE D.S. BROWN COMPANY
300 E. CHERRY STREET
NORTH BALTIMORE, OHIO 45872
419.257.3561
FAX: 419.257.0332
WWW.DSBROWN.COM

	ITEM	QUANTITY
LOCATION — I-24 OVER THE OHIO RIVER	-	-
STRUCTURE NO. — 064-0035	-	-
ROUTE — FAI ROUTE 24 (I-24)	-	-
SECTION — BSMART 2013-1	-	-
CONTRACT NO. — 78293 DISTRICT NO. — 9	-	-
P.O. NO. — 7838	-	-
DESIGNER — ILLINOIS DEPARTMENT OF TRANSPORTATION	-	-
CUSTOMER — HENNEGAN & ASSOCIATES (JOB NO. 06-0113)	-	-

DESCRIPTION: BILL OF MATERIALS
MASSAC COUNTY, ILLINOIS

SCALE:	DRAWN BY:	CHECKED BY:	DATE:	BRIDGE SHEET:
N.T.S.	RES	JLW	6/13/13	31 OF 31
PROJECT NUMBER	PRODUCT CODE	RELEASE	SHEET	
40606	1021	1	31	