F.A.P. RTE.	SECTION	COUNTY	TOTAL SHEETS	SHEET NO.
335	119R-2	LAKE	439	23
STA. 432+83.12		TO STA. 470+56.84		
FED. ROAD DIST. NO.	ILLINOIS	FED. AID PROJECT		

60B01

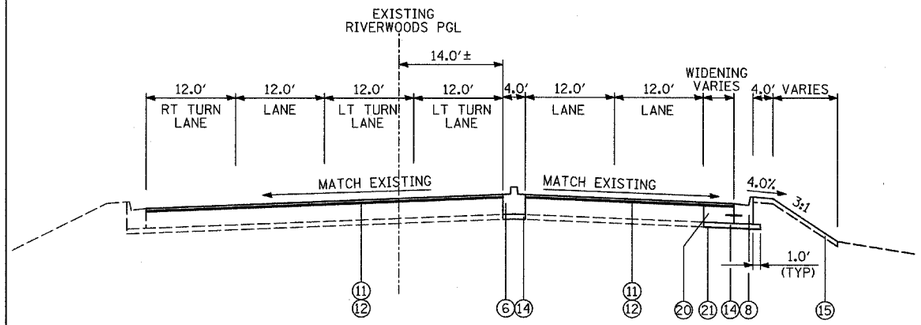

PROPOSED RIVERWOODS BLVD

NORTH LEG OF RIVERWOODS RD/BLVD AND IL RTE 60 INTERSECTION

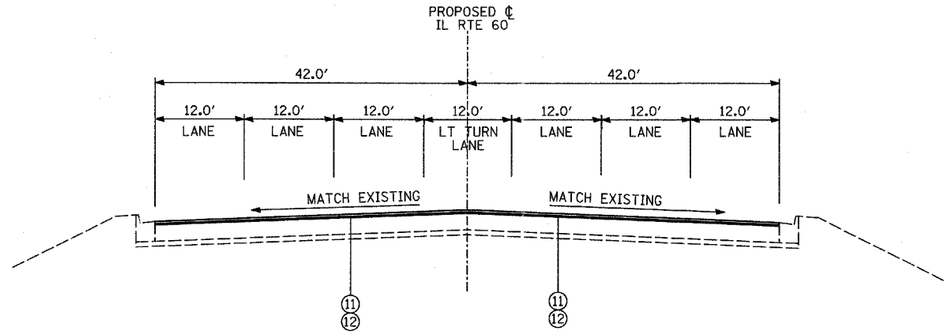

PROPOSED IL ROUTE 60

WEST LEG OF INTERSECTION AT RIVERWOODS RD/BLVD

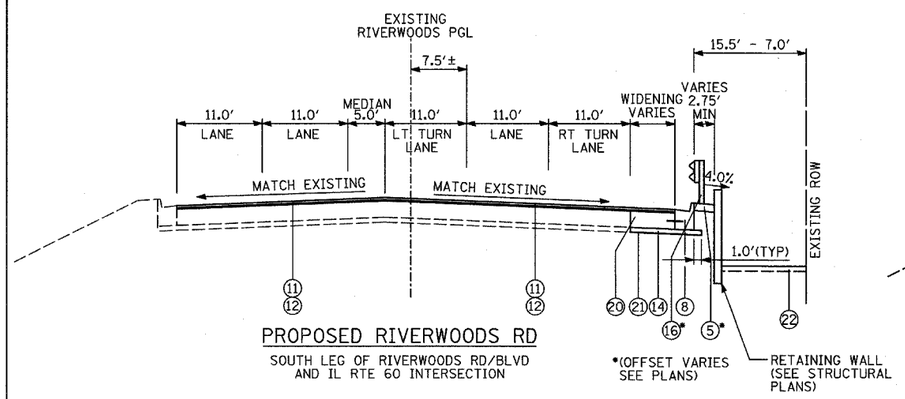

PROPOSED RIVERWOODS RD

SOUTH LEG OF RIVERWOODS RD/BLVD AND IL RTE 60 INTERSECTION

*(OFFSET VARIES SEE PLANS)

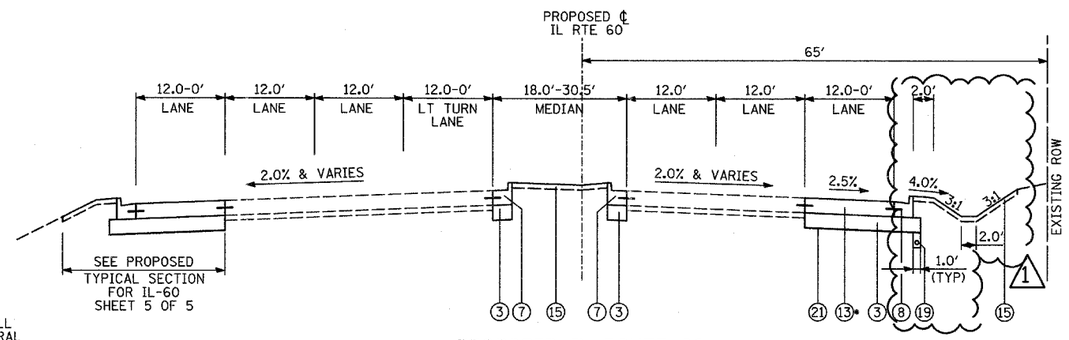

PROPOSED IL ROUTE 60

SAUNDERS ROAD/FIELD DRIVE (STA 460+81) TO EAST PROJECT LIMIT (STA. 470+57)

*ANY ADDITIONAL THICKNESS REQUIRED TO MATCH THE EXISTING SHALL BE INCLUDED IN THE COST OF PORTLAND CEMENT CONCRETE PAVEMENT 10¼"

LEGEND:

1. PORTLAND CEMENT CONCRETE PAVEMENT 10¼" (JOINTED)
2. PORTLAND CEMENT CONCRETE PAVEMENT 10" (JOINTED)
3. AGGREGATE SUBGRADE 12"
3a. 3" CA-6 AGGREGATE CAP (THICKNESS VARIES UNDER SHOULDER) (SEE NOTE 2)
3b. 9" POROUS GRANULAR EMBANKMENT (SEE NOTE 2)
4. STABILIZED SUBBASE - HOT-MIX ASPHALT, 3" (PER ISTHA DESIGN)
5. HOT-MIX ASPHALT SHOULDERS, 6"
6. CONCRETE MEDIAN, TYPE SB-6.12
7. COMBINATION CONCRETE CURB AND GUTTER, TYPE B-6.12
8. COMBINATION CONCRETE CURB AND GUTTER, TYPE B-6.24
9. GUTTER, TYPE G-2
10. CONCRETE MEDIAN SURFACE, 4 INCH
11. 1¾" POLYMERIZED HOT-MIX ASPHALT SURFACE COURSE, MIX "F" N90
12. 1" LEVELING BINDER, (MACHINE METHOD), N70
13. PORTLAND CEMENT CONCRETE PAVEMENT 10¼" OR MATCH EXISTING
14. SUB-BASE GRANULAR MATERIAL, TYPE B 4"
15. TOPSOIL, 4", SEEDING AND EROSION CONTROL BLANKET (SEE LANDSCAPING PLANS)
16. STEEL PLATE BEAM GUARDRAIL OR TRAFFIC BARRIER TERMINAL, TYPE VARIES
17. TEMPORARY PAVEMENT
18. AGGREGATE SHOULDER, TYPE B 4"
19. PIPE UNDERDRAIN 6"
20. PORTLAND CEMENT CONCRETE BASE COURSE, 10¼"
21. GEOTECHNICAL FABRIC FOR GROUND STABILIZATION (SHALL NOT CROSS UNDERDRAIN TRENCHES)
22. TOPSOIL, 4" AND SODDING (SEE LANDSCAPING PLANS)

LEGEND APPLIES TO PROPOSED TYPICAL SECTION SHEETS 1-4 OF 5 ONLY.

ADDITIONAL UNDERCUT:

"POROUS GRANULAR EMBANKMENT, SUBGRADE" (PGES) IS RECOMMENDED FOR USE UNDER THE PROPOSED PAVEMENT AT LOCATIONS WITH SOILS THAT ARE UNSTABLE OR UNSUITABLE. THE ACTUAL NEED FOR REMOVAL AND REPLACEMENT WITH PGES WILL BE DETERMINED IN THE FIELD AT THE TIME OF CONSTRUCTION BY THE ENGINEER. ALL POTENTIALLY UNSTABLE SOILS SHALL BE TESTED WITH A STATIC CONE PENETROMETER AND TREATED IN ACCORDANCE WITH ARTICLE 301.04 AND THE UNDERCUT GUIDELINES IN THE IDOT SUBGRADE STABILITY MANUAL. IF UNSTABLE AND/OR UNSUITABLE MATERIALS ARE ENCOUNTERED, THE SOIL SHALL BE REMOVED AND REPLACED WITH PGES AS DETERMINED BY THE ENGINEER. IF UNSTABLE AND/OR UNSUITABLE MATERIAL IS NOT ENCOUNTERED, THEN THE QUANTITY SHALL BE DEDUCTED AND NO ADDITIONAL COMPENSATION WILL BE DUE THE CONTRACTOR.

(SEE SCHEDULE OF QUANTITIES - EARTHWORK FOR LOCATIONS)

NOTES:

1. REFER TO PAVEMENT JOINTING AND ELEVATION PLANS FOR THE DESCRIPTIONS AND DETAILS OF PAVEMENT JOINTS.
2. 3" CA-6 AGGREGATE CAP AND 9" POROUS GRANULAR EMBANKMENT TOGETHER ARE PAID FOR AS AGGREGATE SUBGRADE 12". THE ADDITIONAL THICKNESS OF THE CAPPING LAYER SHALL BE INCLUDED IN THE COST OF AGGREGATE SUBGRADE 12".

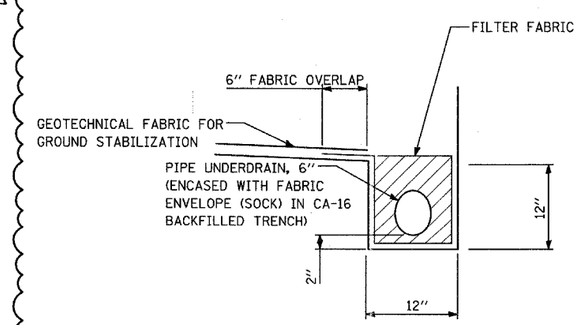

PIPE UNDERDRAIN DETAIL

NOTES:

(1) GEOTECHNICAL FABRIC FOR GROUND STABILIZATION SHALL BE PLACED SUCH THAT IT EXTENDS TO THE EDGE OF THE TRENCH AND OVERLAPS THE FILTER FABRIC BY A MINIMUM OF 6". AT NO TIME SHALL THE GEOTECHNICAL FABRIC FOR GROUND STABILIZATION BE OVER OR COVER THE UNDERDRAIN TRENCH.

(2) NO CONSTRUCTION TRAFFIC SHALL BE ALLOWED ON THE TRENCH UNTIL THE COMPACTED AGGREGATE SUBGRADE 12" IS PROVIDED.

(3) FILTER FABRIC, FABRIC ENVELOPE, AND CA-16 AGGREGATE ARE INCLUDED IN THE UNIT COST OF PIPE UNDERDRAIN, 6".

(4) CONTRACTOR SHALL FLUSH PIPE UNDERDRAIN WITH WATER TO INSURE UNDERDRAIN IS FUNCTIONING PROPERLY PRIOR TO THE PLACEMENT OF THE AGGREGATE SUBGRADE 12". PRIOR TO COMMENCING THIS WORK, THE CONTRACTOR SHALL PROVIDE THE ENGINEER WITH HIS APPROACH AND METHODS FOR COMPLETING THIS WORK, FOR THE ENGINEER'S REVIEW AND APPROVAL. THE COST OF FLUSHING THE PIPE IS INCLUDED IN THE UNIT COST OF PIPE UNDERDRAIN, 6".

TY·LIN INTERNATIONAL

REVISIONS	
NAME	DATE
1 ADDENDUM 1	08/31/07

ILLINOIS DEPARTMENT OF TRANSPORTATION

ILLINOIS RTE 60 OVER I-94

PROPOSED TYPICAL SECTIONS
INTERSECTIONS OF IL RTE 60 AND RIVERWOODS RD/BLVD AND IL RTE 60 AND SAUNDERS RD/FIELD DR
(SHEET 4 OF 5)

SCALE: NONE | DRAWN BY: CBS

DATE: MAY 8, 2007 | CHECKED BY: MPG