F.A.P. RTE.	SECTION	COUNTY	TOTAL SHEETS	SHEET NO.
335	119R-2	LAKE	439	191
STA. 432+83.12		TO STA. 470+56.84		
FED. ROAD DIST. NO.	ILLINOIS	FED. AID PROJECT		

60B01

CONTROLLER SEQUENCE

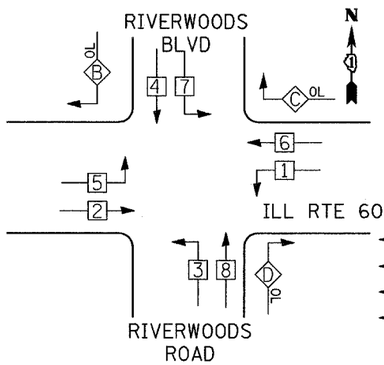

LEGEND
- SINGLE ENTRY PHASE
- DUAL ENTRY PHASE
- OVERLAP
- PEDESTRIAN PHASE
- NUMBER REFERS TO ASSOCIATED PHASE

PHASE DESIGNATION DIAGRAM

RIGHT TURN OVERLAP PHASE DESIGNATION

OVERLAP LETTER		PERMISSIVE PHASE		PROTECTED PHASE
B	=	4	+	5
C	=	6	+	7
D	=	8	+	1

EMERGENCY VEHICLE PREEMPTION SEQUENCE

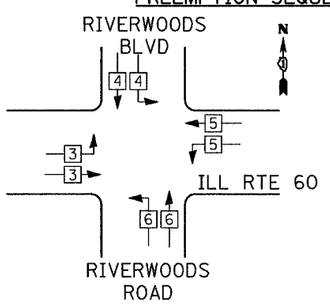

PROPOSED EMERGENCY VEHICLE PREEMPTORS				
EMERGENCY VEHICLE PREEMPTOR	3	4	5	6
MOVEMENT				

SCHEDULE OF QUANTITIES

PAY ITEM	UNIT	QUANTITY
CONDUIT IN TRENCH, 2½" DIA., GALVANIZED STEEL	FOOT	271
CONDUIT IN TRENCH, 3" DIA., GALVANIZED STEEL	FOOT	25
CONDUIT PUSHED, 2" DIA., GALVANIZED STEEL	FOOT	54
CONDUIT PUSHED, 4" DIA., GALVANIZED STEEL	FOOT	448
HANDHOLE	EACH	3
HEAVYDUTY HANDHOLE	EACH	1
DOUBLE HANDHOLE	EACH	1
DRILL EXISTING HANDHOLE	EACH	7
ELECTRIC CABLE IN CONDUIT, GROUNDING, NO. 6 1C	FOOT	762
ELECTRIC CABLE IN CONDUIT, SIGNAL NO. 14 2C	FOOT	635
ELECTRIC CABLE IN CONDUIT, SIGNAL NO. 14 3C	FOOT	1345
ELECTRIC CABLE IN CONDUIT, SIGNAL NO. 14 5C	FOOT	3163
ELECTRIC CABLE IN CONDUIT, SIGNAL NO. 14 7C	FOOT	871
ELECTRIC CABLE IN CONDUIT, LEAD-IN, NO. 14 1 PAIR	FOOT	6011
STEEL COMBINATION MAST ARM ASSEMBLY AND POLE, 26 FT.	EACH	1
STEEL MAST ARM ASSEMBLY AND POLE, 52 FT.	EACH	1
STEEL COMBINATION MAST ARM ASSEMBLY AND POLE WITH DUAL MAST ARMS, 34FT AND 55 FT.	EACH	1
CONCRETE FOUNDATION, TYPE E 30-INCH DIAMETER	FOOT	30
CONCRETE FOUNDATION, TYPE E 36-INCH DIAMETER	FOOT	15
SIGNAL HEAD, L.E.D., 1-FACE, 3 SECTION, BRACKET MOUNTED	EACH	1
SIGNAL HEAD, L.E.D, 1-FACE, 5 SECTION, BRACKET MOUNTED	EACH	1
SIGNAL HEAD, L.E.D., 1-FACE, 3 SECTION, MAST ARM MOUNTED	EACH	8
SIGNAL HEAD, L.E.D., 1-FACE, 5 SECTION, MAST ARM MOUNTED	EACH	2
TRAFFIC SIGNAL BACK PLATE, LOUVERED	EACH	10
INDUCTIVE LOOP DETECTOR	EACH	13
DETECTOR LOOP, TYPE I	FOOT	1484
PREFORMED DETECTOR LOOPS	FOOT	208
LIGHT DETECTOR	EACH	2
LIGHT DETECTOR AMPLIFIER	EACH	2
TRENCH AND BACKFILL FOR ELECTRICAL WORK	FOOT	414
ELECTRICAL CABLE IN CONDUIT, NO. 20 3/C, TWISTED, SHIELDED	FOOT	710
SIGN PANEL - TYPE 1	SQ FT	20
RELOCATE EXISTING SIGNAL HEAD	EACH	3
REMOVE EXISTING TRAFFIC SIGNAL EQUIPMENT	EACH	1
REMOVE EXISTING HANDHOLE	EACH	5
REMOVE EXISTING CONCRETE FOUNDATION	EACH	5
TEMPORARY TRAFFIC SIGNAL INSTALLATION	EACH	1
UNINTERRUPTABLE POWER SUPPLY	EACH	1
TEMPORARY TRAFFIC SIGNAL TIMINGS	EACH	1

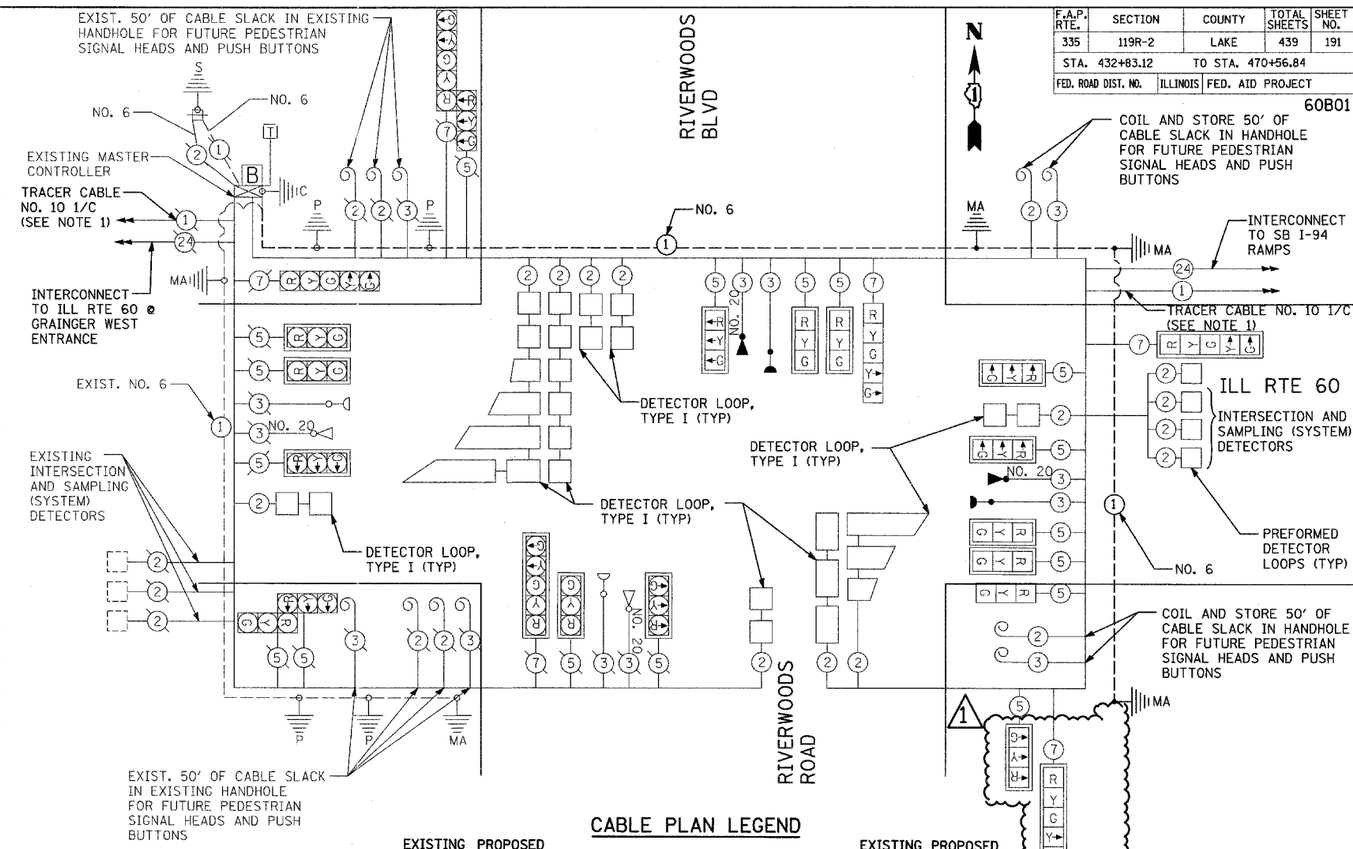

CABLE PLAN LEGEND

EXISTING	PROPOSED	
G	G	8" (200mm) TRAFFIC SIGNAL SECTION
R	R	12" (300mm) TRAFFIC SIGNAL SECTION
W	W	12" (300mm) PEDESTRIAN SIGNAL SECTION
		12" (300mm) PEDESTRIAN SIGNAL SECTION
		CONTROLLER CABINET
		SERVICE INSTALLATION
		TELEPHONE CONNECTION
		MAGNETIC DETECTOR
		EMERGENCY VEHICLE LIGHT DETECTOR
		CONFIRMATION BEACON
		PUSHBUTTON DETECTOR
		VEHICLE DETECTOR, INDUCTION LOOP
2	2	DENOTES NUMBER OF CONDUCTORS, ALL CABLE NO. 14 EXCEPT AS INDICATED. ALL LOOP DETECTOR CABLE TO BE SHIELDED.

EXISTING	PROPOSED	
R Y G Y G "P"	R Y G Y G "P"	SIGNAL FACE WITH BACKPLATE "P" INDICATES PROGRAMMED HEAD
"E"		RAILROAD CONTROL CABINET
"E"		ILLUMINATED SIGN, FIBER OPTIC "NO LEFT TURN"
"E"		ILLUMINATED SIGN, FIBER OPTIC "NO RIGHT TURN"
H/C	H/C	GROUND ROD AT HANDHOLE, DOUBLE HANDHOLE, OR CONTROLLER
P	P	GROUND ROD AT POST OR MAST ARM POLE
S	S	GROUND ROD AT ELECTRIC SERVICE INSTALLATION
1	1	GROUND CABLE IN CONDUIT, NO.6 SOLID COPPER (GREEN)
24	24	FIBER OPTIC CABLE IN CONDUIT, NO. 62.5/125 MM12F & SM12F
B	B	UNINTERRUPTABLE POWER SUPPLY (UPS)

NOTES:

1. THE END OF THE TRACER CABLE SHALL BE CONTINUOUS AND EXTEND INTO THE CONTROLLER CABINET.

I.D.O.T.
TRAFFIC SIGNAL INSTALLATION
ELECTRICAL SERVICE REQUIREMENTS

TYPE	NO. OF LAMPS	WATTAGE INCAND.	WATTAGE LED	% OPERATIONS	TOTAL WATTAGE
SIGNAL (RED)	15	135	17	0.50	127.5
(YELLOW)	15	135	25	0.25	93.75
(GREEN)	15	135	15	0.25	56.25
ARROW	36	135	12	0.10	43.2
PED. SIGNAL	0	90	25	1.00	0
CONTROLLER	1	100	100	1.00	100
ILLUM. SIGN	0			0.05	0
FLASHER	0			0.05	0
ENERGY COSTS TO:				TOTAL =	420.7

FOUNDATION (DEPTH)	FT.	(m)	CABLE SLACK	FT.	(m)	VERTICAL	FT.	(m)
TYPE A - POST	4	(1.2)	HANDHOLE	6.5	(2.0)	ALL FOUNDATIONS	3.5	(1.0)
D - CONTROLLER	4	(1.2)	DOUBLE HANDHOLE	13	(4.0)	MAST ARM (L) POLE	20'+ L-2 = (6m+L-0.6m)	
E - MAST ARM POLE			SIGNAL POST	2	(1.0)			
24" (600mm)	10	(3.0)	CONTROLLER CAB.	1	(0.5)	BRACKET MOUNTED	13	(4.0)
30" (750mm)	15	(4.6)	FIBER OPTIC	13	(4.0)	PED. PUSHBUTTON	4	(1.2)
			ELECTRIC SERVICE	1	(0.5)	ELECTRIC SERVICE	13.5	(4.1)
			GROUND CABLE	1	(0.5)	SERVICE TO GROUND	13.5	(4.1)
						POST MOUNTED	6	(1.8)

ILLINOIS DEPARTMENT OF TRANSPORTATION
DIVISION OF HIGHWAYS/DISTRICT 1
201 WEST CENTER COURT/SCHAUMBURG, ILLINOIS 60196-1096

ENERGY SUPPLY: CONTACT: JOHN PRIBICH
PHONE: 630-437-2212
COMPANY: COMED

TY·LIN INTERNATIONAL

REVISIONS NAME	DATE
ADDENDUM 1	08/31/07

ILLINOIS DEPARTMENT OF TRANSPORTATION
ILLINOIS RTE 60 OVER I-94

SCHEDULE OF QUANTITIES, CABLE PLAN, AND PHASE DESIGNATION DIAGRAM ILL RTE. 60 AND RIVERWOODS ROAD/BLVD.

SCALE: NONE | DRAWN BY: CBS
DATE: MAY 8, 2007 | CHECKED BY: DMJ