F.A.P. RTE.	SECTION	COUNTY	TOTAL SHEETS	SHEET NO.
335	119R-2	LAKE	439	202
STA.		TO STA.		
FED. ROAD DIST. NO.	ILLINOIS	FED. AID PROJECT		

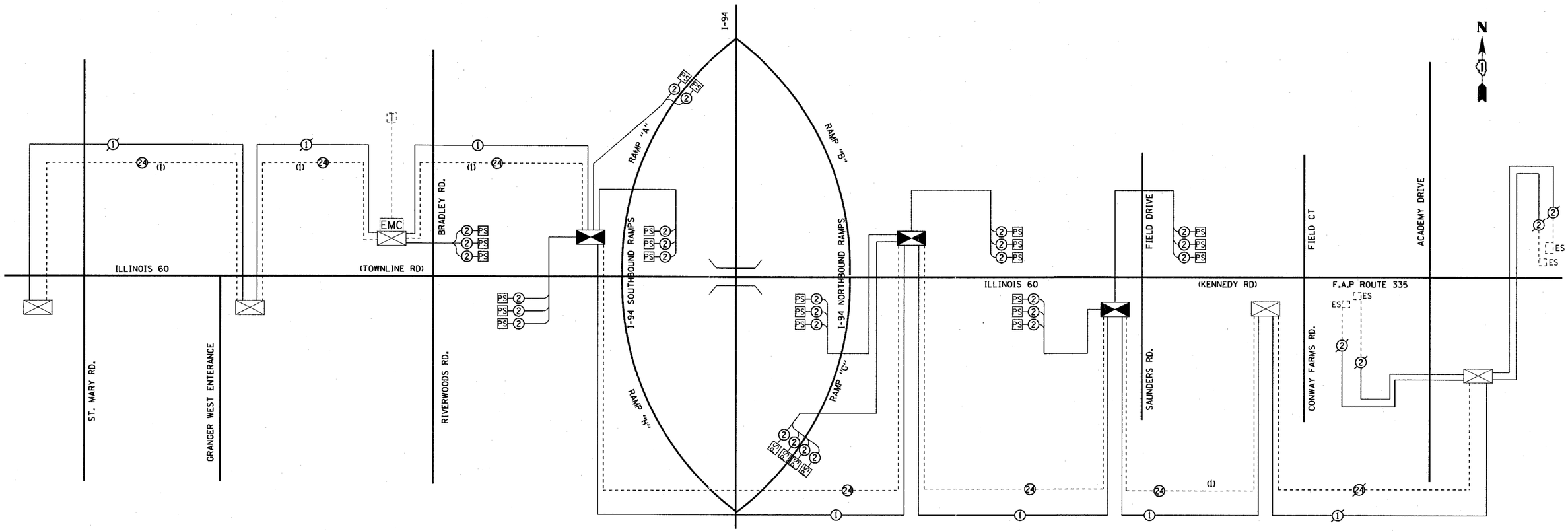

NOTE:

THE TRAFFIC SIGNAL CONTROL EQUIPMENT FOR THIS PROJECT SHAL BE "EAGLE" TO MATCH THE EXISTING SYSTEM.

INTERCONNECT SCHEMATIC LEGEND

- PROPOSED INTERSECTION CONTROLLER
- EXISTING INTERSECTION CONTROLLER
- MMC — MASTER MASTER CONTROLLER
- EMC — EXISTING MASTER CONTROLLER
- MC — PROPOSED INTERSECTION CONTROLLER
- EXISTING INTERSECTION & SAMPLING (SYSTEM) DETECTOR
- PROPOSED INTERSECTION & SAMPLING (SYSTEM) DETECTOR
- P — EXISTING INTERSECTION DETECTOR AND PROPOSED SAMPLING (SYSTEM) DETECTOR
- ES — EXISTING SAMPLING (SYSTEM) DETECTOR
- PS — PROPOSED SAMPLING (SYSTEM) DETECTORS
- 24 — PROPOSED INTERCONNECT CABLE - NO. 62.5/125 2 MM 12F & SM 12F - FIBER OPTIC CABLE
- 24 — EXISTING INTERCONNECT CABLE - NO. 62.5/125 2 MM 12F & SM 12F - FIBER OPTIC CABLE
- 6 — PROPOSED INTERCONNECT CABLE - NO. 18 3 PAIR TWISTED, SHIELDED
- 6 — EXISTING INTERCONNECT CABLE - NO. 18 3 PAIR TWISTED, SHIELDED
- 2 — PROPOSED LOOP DETECTOR CABLE - 2/C TWISTED, SHIELDED
- 2 — EXISTING LOOP DETECTOR CABLE - 2/C TWISTED, SHIELDED
- 1 — PROPOSED TRACER CABLE NO. 14 1/C
- 1 — EXISTING TRACER CABLE NO. 14 1/C
- T — PROPOSED TELEPHONE CONNECTION
- T — EXISTING TELEPHONE CONNECTION
- (1) — EXISTING FIBER OPTIC CABLE (12F) TO BE REMOVED FROM CONDUIT

SCHEDULE OF INTERCONNECT QUANTITIES

1,754	FOOT CONDUIT IN TRENCH, 2" DIA. GALVANIZED STEEL
309	FOOT CONDUIT PUSHED, 2" DIA., GALVANIZED STEEL
2	EACH JUNCTION BOX, STAINLESS STEEL, ATTACHED TO STRUCTURE, 6"x6"x4"
3	EACH HANDHOLE
1,754	FOOT TRENCH AND BACKFILL FOR ELECTRICAL WORK
10,538	FOOT FIBER OPTIC CABLE IN CONDUIT NO 62.5/125, 24F
4,819	FOOT ELECTRIC CABLE IN CONDUIT, TRACER, NO. 14 1/C
1	EACH DRILL EXISTING HANDHOLE
6,632	FOOT REMOVE ELECTRIC CABLE FROM CONDUIT
1	L SUM RE-OPTIMIZE TRAFFIC SIGNAL SYSTEM - LEVEL II ⚠

EJM ENGINEERING, INC.
411 South Wells Street Suite 800
Chicago, Illinois 60607

⚠ Rev. 8-31-07

REVISIONS	
NAME	DATE

ILLINOIS DEPARTMENT OF TRANSPORTATION

ILL ROUTE 60
INTERCONNECT SCHEMATIC
ST. MARY'S ROAD TO ACADEMY DRIVE
SCHEDULE OF QUANTITIES

S.N.		DESIGNED BY:	JM
SCALE:	NOT TO SCALE	DRAWN BY:	PK
DATE:	MAY 8, 2007	CHECKED BY:	CK