| F.A.P. RTE. | SECTION | COUNTY | TOTAL SHEETS | SHEET NO. |
|---|---|---|---|---|
| 335 | 119R-2 | LAKE | 439 | 277 |
| STA. 432+83.12 | | TO STA. 470+56.84 | | |
| FED. ROAD DIST. NO. | ILLINOIS | FED. AID PROJECT | | |

60B01

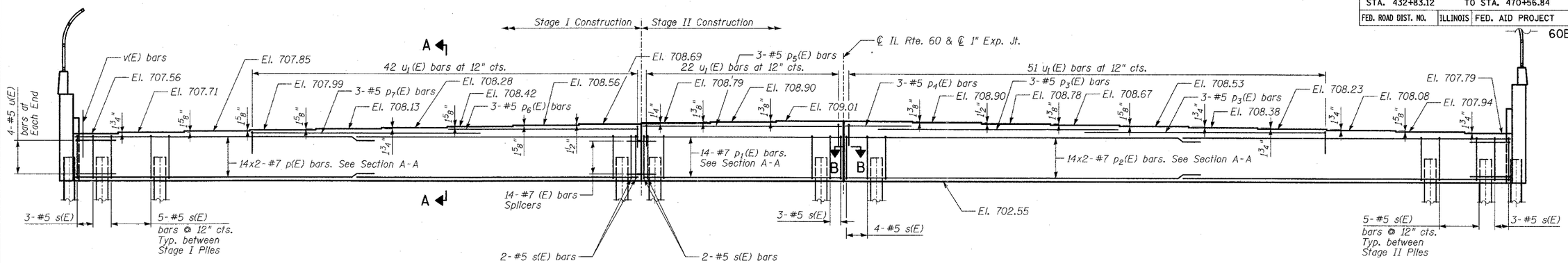


## PILE DATA

Type: Steel HP 14x73
Nominal Required Bearing: 480 Kips
Allowable Resistance Available: 160 Kips
Estimated Length: 56'-6" Ft
No. Production Piles: 25
No. Test Piles: 1

## PILE DATA FOR WINGWALLS

Type: Steel HP 14x73
Nominal Required Bearing: 480 Kips
Allowable Resistance Available: 160 Kips
Estimated Length: 56'-0" Ft
No. Production Piles: 4
No. Test Piles: 0

## ELEVATION

(Looking East)

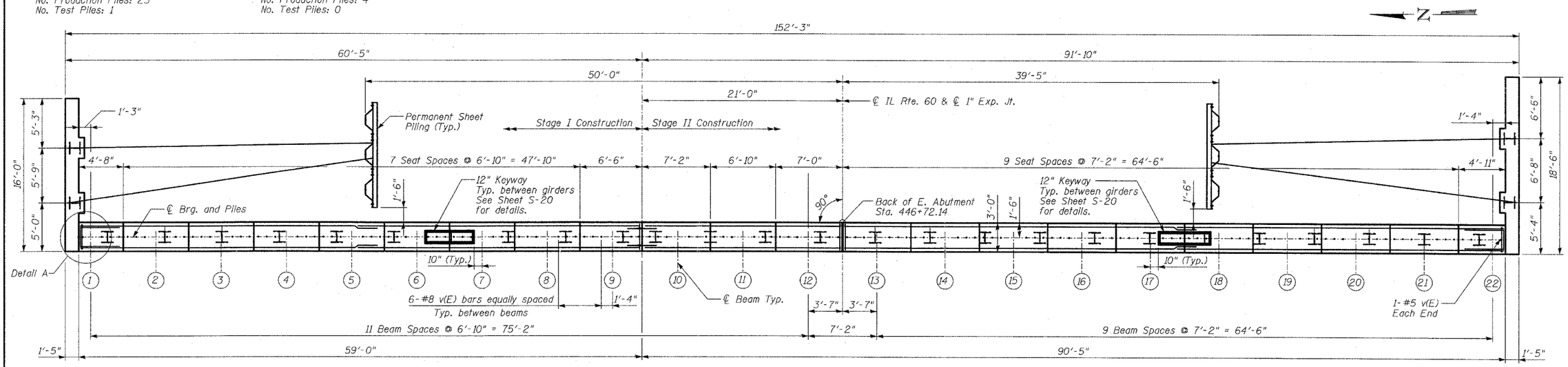


## PLAN

## MINIMUM BAR LAPS

(Abutments)

| Bar | Lap |
|---|---|
| #5 | 2'-2" |
| #7 | 4'-10" |

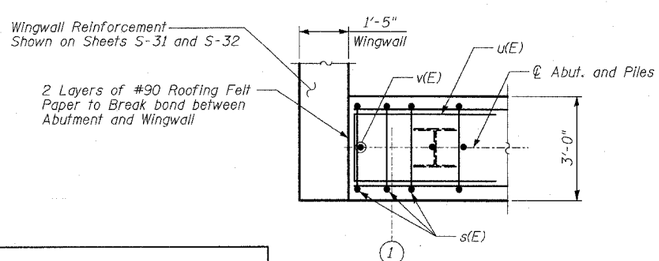


## DETAIL A

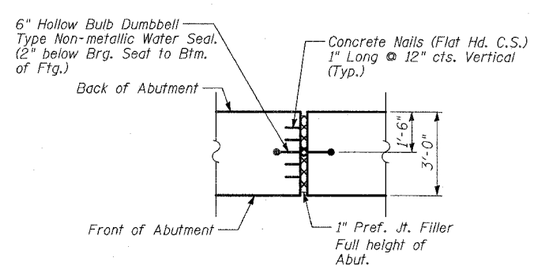


## SECTION B-B

Cost of Water Seal included in the cost of Concrete Structures.

## NOTES

1. Pour steps monolithically with cap.
2. For Pile Layout and Spacing See Sheet S-3.
3. See Sheet S-32 for Section A-A.
4. V(E) bars shall be cast in place and not mucked-in after the pile cap is placed.
5. See Sheet S-20 for Keyway details.

SHEET S-30 OF S-53

| REVISIONS | |
|---|---|
| NAME | DATE |
| | |

ILLINOIS DEPARTMENT OF TRANSPORTATION

**EAST ABUTMENT**

ILLINOIS 60 OVER I-94
F.A.P. RTE. 335 SECTION 119R-2
LAKE COUNTY STA. 445+54.14
S.N. 049-2012 ISTHA BRIDGE NO. 407

SCALE:
DATE: MAY 8, 2007

DESIGNED BY: TB
DRAWN BY: TB
CHECKED BY: SP

TY·LIN INTERNATIONAL

p:\60245811-60\structure\final\L60BRaabut.DGN
05/03/2007 04:30:45 PM