ROUTE NO.	SECTION	COUNTY	TOTAL SHEETS	SHEET NO.
F.A.P. 685	115 BR-1	HANCOCK	44	25
FED. ROAD DIST. NO. 7		ILLINOIS	FED. AID PROJECT-	

SHEET NO. 7

17 SHEETS

Contract #72A90

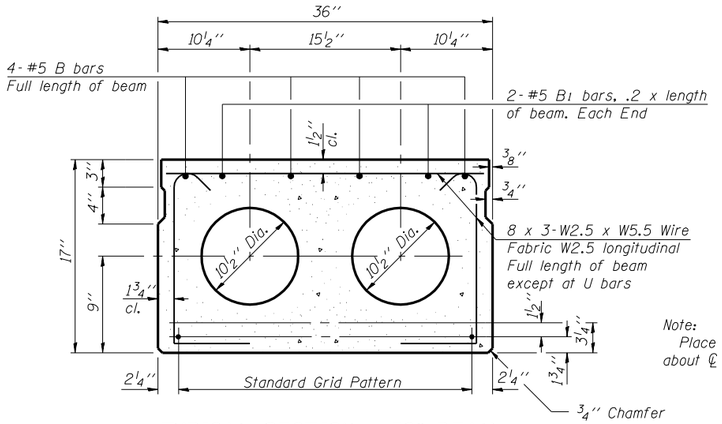

TYPICAL SECTION - 36" BEAM

½'' ϕ Strands, Each Strand Stressed to 30,900 Lbs.
5-Strands 1¾'' up, 4-Strands 3¼'' up

Note:
Place strands symmetrically about ℄ of beam.

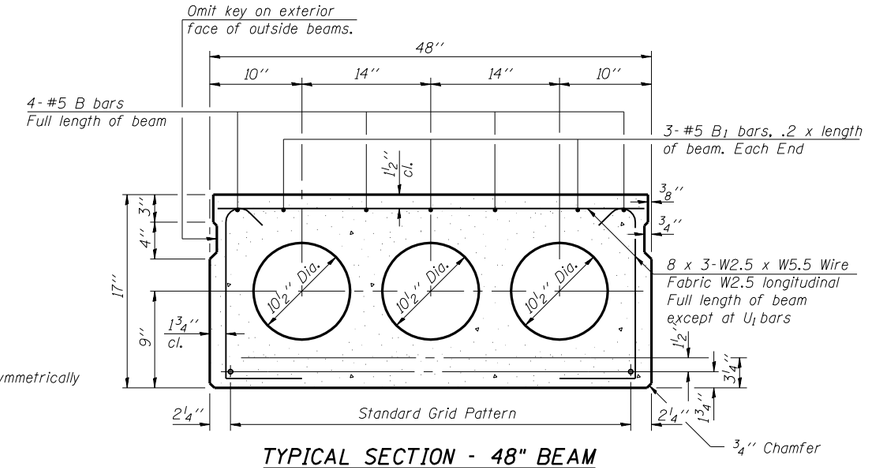

TYPICAL SECTION - 48" BEAM

½'' ϕ Strands, Each Strand Stressed to 30,900 Lbs.
8-Strands 1¾'' up, 4-Strands 3¼'' up

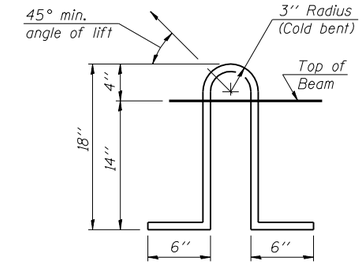

LIFTING LOOP DETAIL

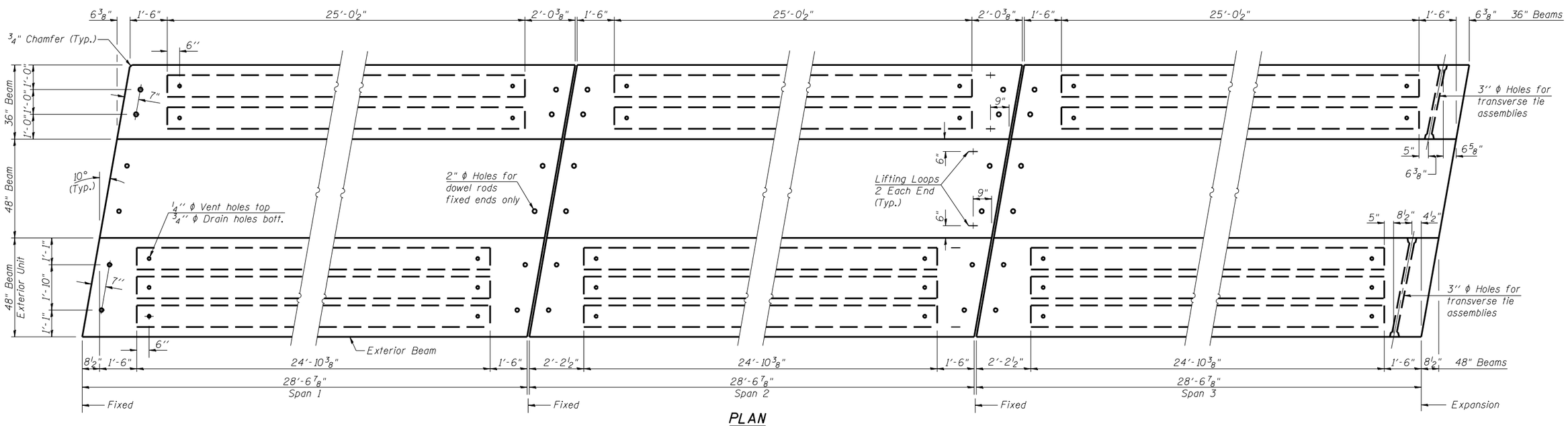

PLAN

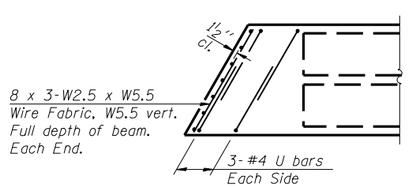

END PLAN

36'' Beam Ends

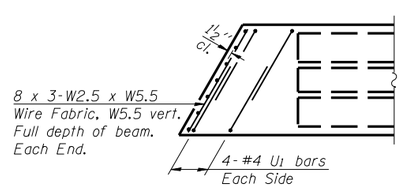

END PLAN

48'' Beam Ends

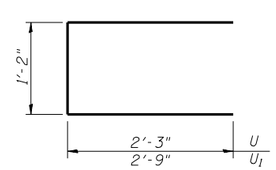

BARS U & U1

LIN ENGINEERING, LTD.
Consulting Engineers
Chatham, Illinois

Designed By: DLS | Checked By: MTH | Drawn By: AJF
Date: 04/2007 | File: 034-0061.dgn

REVISIONS	
NAME	DATE

ILLINOIS DEPARTMENT OF TRANSPORTATION

SUPERSTRUCTURE DETAILS - 2
IL ROUTE 9 OVER
CAMP CREEK
F.A.P. ROUTE 685 - SECTION 115 BR-1
HANCOCK COUNTY
STA. 607+43.00
STRUCTURE NO. 034-0061

$FILEABBREV$ 1:35:57 PM 7/2/2007