83954

F. A. RTE.	SECTION	COUNTY	TOTAL SHEETS	SHEET NO
	03-00087-00-LT	COOK	20	18
DUNDEE ROAD	LIGHTING DETAILS			
FED. ROAD DISTRICT	ILLINOIS	FED. AID PROJECT		

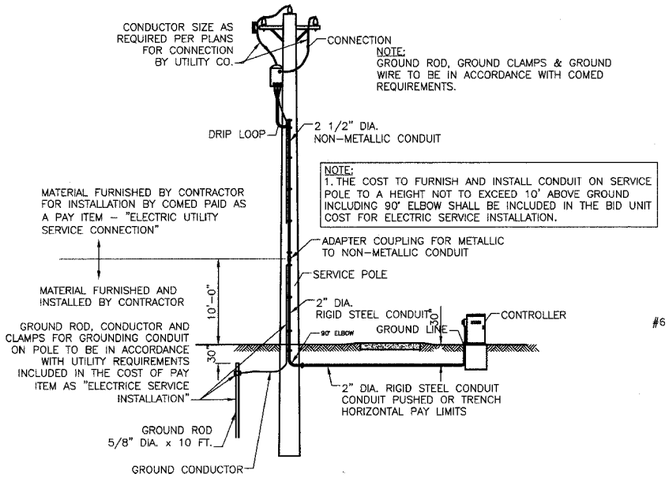

PROPOSED SERVICE INSTALLATION
POLE TOP MOUNTED TRANSFORMER

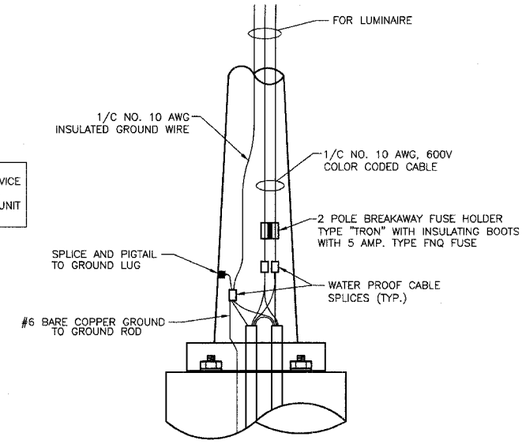

ROADWAY POLE HANDHOLE WIRING DIAGRAM

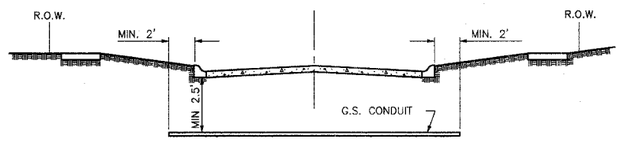

STREET CROSSING

① CONDUIT SHALL BE HEAVY WALL RIGID G.S. CONDUIT.
② CONDUIT SHALL EXTEND A MINIMUM OF 2 FT. BEYOND BACK OF CURB.
③ CONDUIT SHALL BE A MINIMUM OF 2.5 FT. BELOW BOTTOM OF CURB.

ELECTRICAL CONDUIT UNDER PAVEMENT

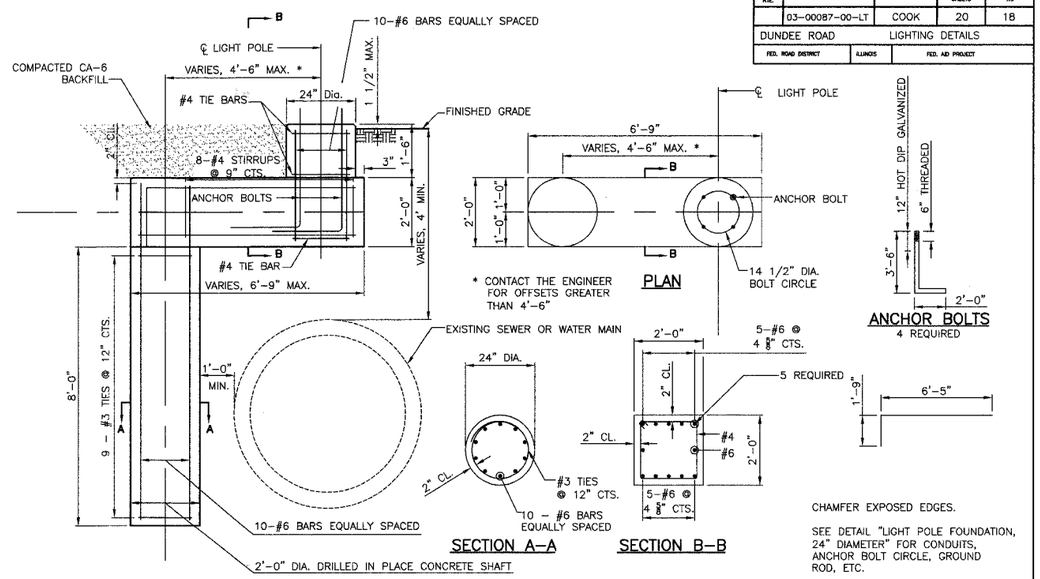

LIGHT POLE FOUNDATION, 24" DIAMETER, OFFSET

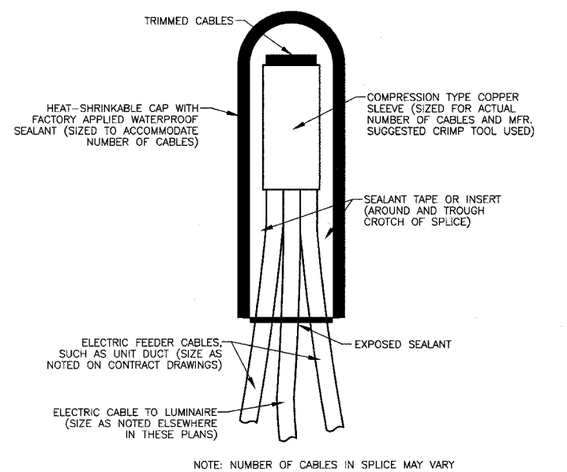

SPLICING ELECTRIC CABLES
BASIC MATERIALS AND METHODS

NOTES:

1. IN GRASS COVERED AREAS, THE BACKFILL MAY BE COMPACTED EARTH.
2. TRENCHES WITHIN 2' OF PROPOSED OR EXISTING STREETS, DRIVEWAYS, OR SIDEWALKS WILL BE BACKFILLED WITH COMPACTED FA-6 SAND OR LIMESTONE SCREENINGS.
3. WARNING TAPE WILL BE RED WITH BLACK LETTERING TO READ "CAUTION - ELECTRIC LINE BURIED BELOW".
4. ALL GRASS COVERED AREAS DISTURBED DURING CONSTRUCTION WILL BE RESTORED WITH 4" OF TOPSOIL AND SOD.

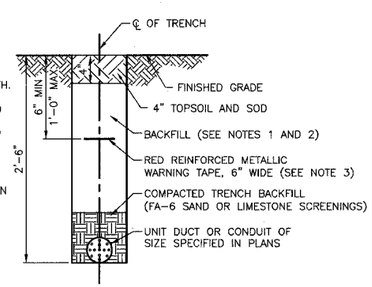

TYPICAL TRENCH CROSS SECTION

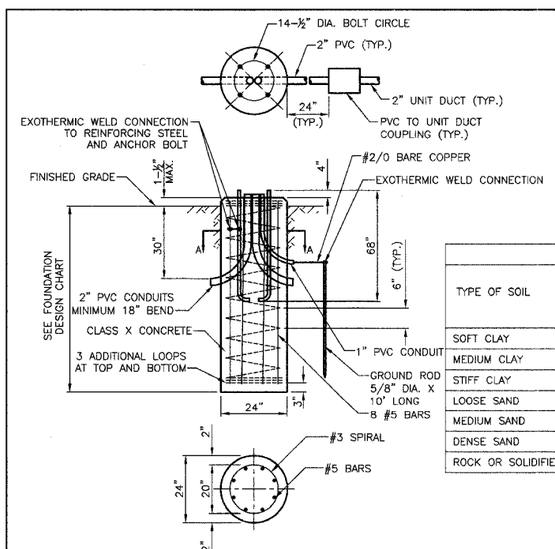

SECTION A-A

LIGHT POLE FOUNDATION, 24" DIAMETER

FOUNDATION DESIGN CHART

TYPE OF SOIL	DESIGN DEPTH OF FOUNDATION	REINFORCEMENT IN FOUNDATION	
	"D"	VERT. BARS	SPIRAL
SOFT CLAY	11'-0"	8-#6 X 10'-6"	#4 X 116'
MEDIUM CLAY	9'-0"	8-#6 X 8'-6"	#4 X 97'
STIFF CLAY	7'-6"	8-#6 X 7'-0"	#4 X 82'
LOOSE SAND	9'-6"	8-#6 X 9'-0"	#4 X 102'
MEDIUM SAND	9'-3"	8-#6 X 8'-9"	#4 X 99'
DENSE SAND	8'-0"	8-#6 X 7'-6"	#4 X 87'
ROCK OR SOLIDIFIED SLAG	5'-0"	NONE	NONE

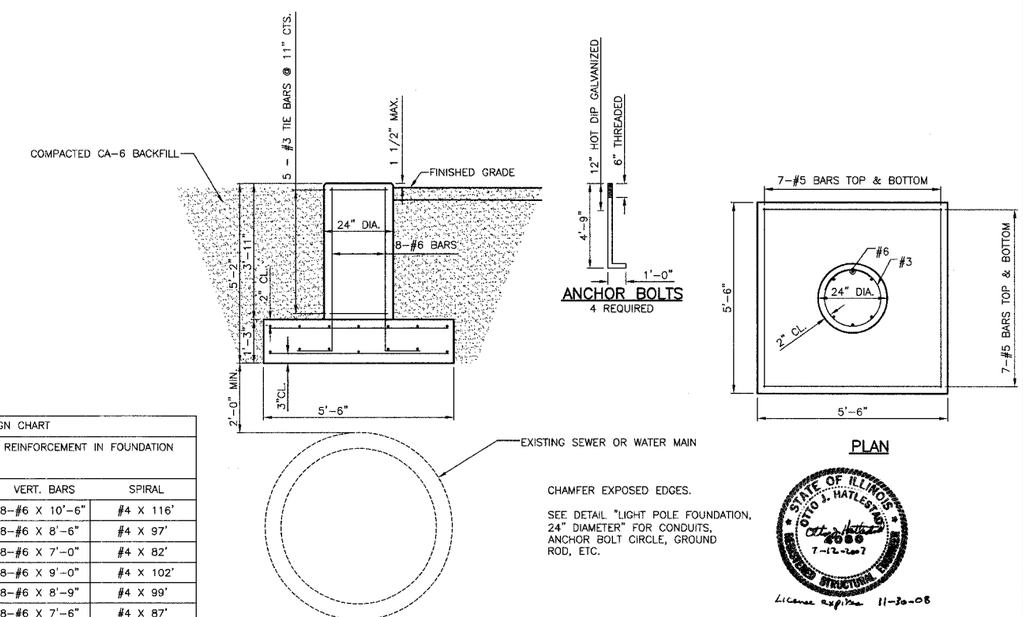

LIGHT POLE FOUNDATION (SPECIAL)

STATE OF ILLINOIS
OTTO J. HATLESTAD
2088
7-12-2007
STRUCTURAL
License expires 11-30-08

REVISIONS	

VILLAGE OF BUFFALO GROVE
DUNDEE ROAD LIGHTING IMPROVEMENT
LIGHTING DETAILS

NOT TO SCALE

DESIGNED BY: S.J.C.
CHECKED BY: D.N.M.
DATE: 07/10/2007