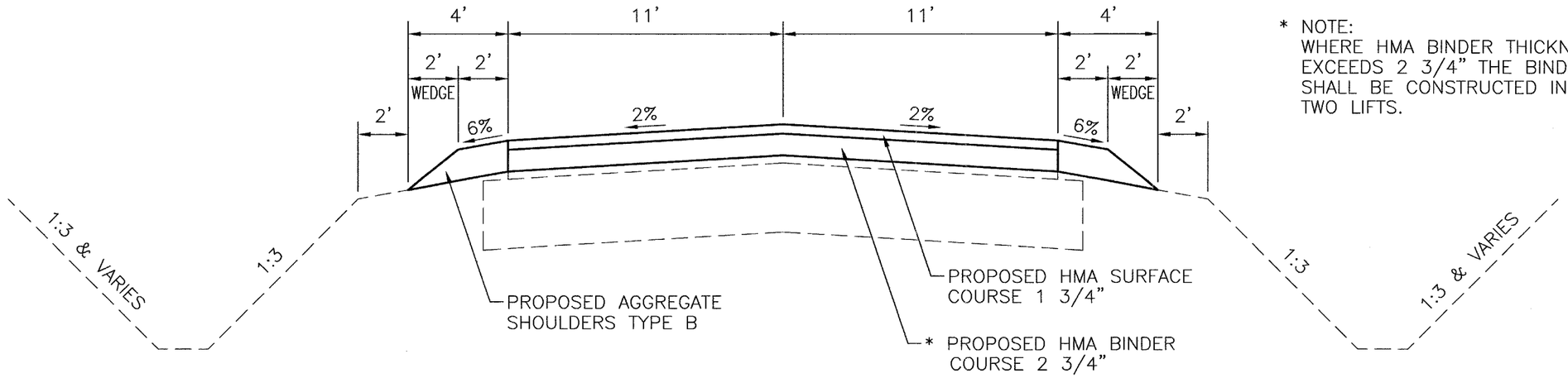


* NOTE:
WHERE HMA BINDER THICKNESS EXCEEDS 2 3/4" THE BINDER SHALL BE CONSTRUCTED IN TWO LIFTS.

# PROPOSED TYPICAL SECTION

**STA. 294+00 TO STA. 354+94.88**
**STA. 363+04.20 TO STA. 410+10**
**STA. 410+97 TO STA. 461+16 (BK)**
**STA. 110+00 (AH) TO STA. 113+20**

NOTE: STATION EQUATIONS
STA. 319+17.50 (BK) = STA. 291+61.00 (AH)
STA. 359+98.77 (BK) = STA. 359+99.80 (AH)
STA. 461+16 (BK) = STA. 110+00 (AH)

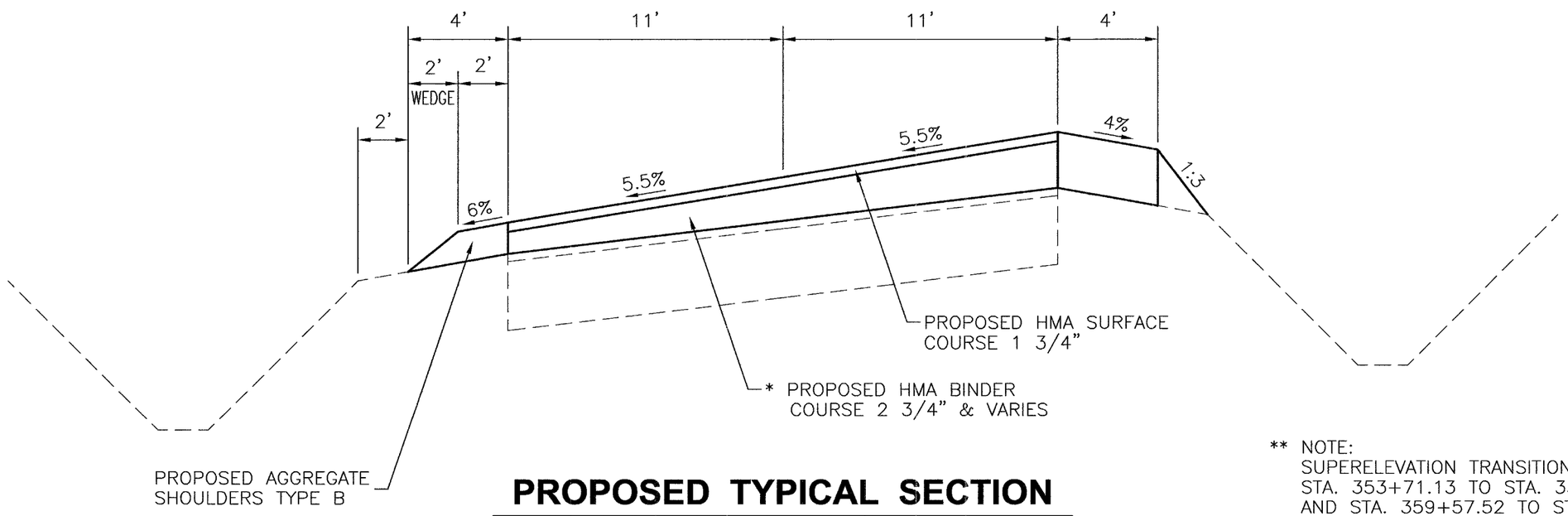


** NOTE:
SUPERELEVATION TRANSITION FROM STA. 353+71.13 TO STA. 355+36.13 AND STA. 359+57.52 TO STA. 361+23.55 (SEE SUPERELEVATION TRANSITION DETAILS)

# PROPOSED TYPICAL SECTION

**STA. 354+94.88 TO STA. 358+73.97 ****

| | | | | | | |
|---|---|---|---|---|---|---|
| DRAWN BY: L.A.G. | CAD/.DWG: TYPX | REVISIONS DATE / BY | CHAMLIN & ASSOCIATES | PERU MORRIS ILLINOIS | C.H. 33 (ANGLING ROAD) 2007 SECTION 05-00198-00-RS | TYPICAL SECTIONS | SCALE: NONE | SHEET 9 |
| CHECKED BY: D.J.D. | DATE: 04/07 | | | | | | FILE NO.: 6813.00Y-1 | OF 33 |