CONTRACT NO. 95504

F.A.S. ROUTE NO.	SECTION	COUNTY	TOTAL SHEETS	SHEET
	25-07/29-00-BR	CRAWFORD	9	6
STA.	TO STA.			
FED. ROAD DIST. NO.	ILLINOIS	PROJECT		

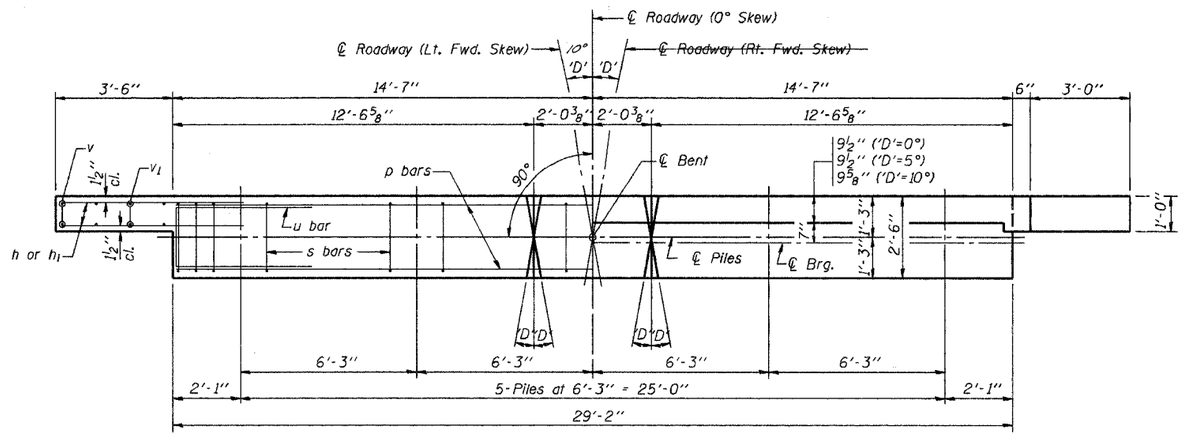

PLAN

('D'=Designated Skew Angle)

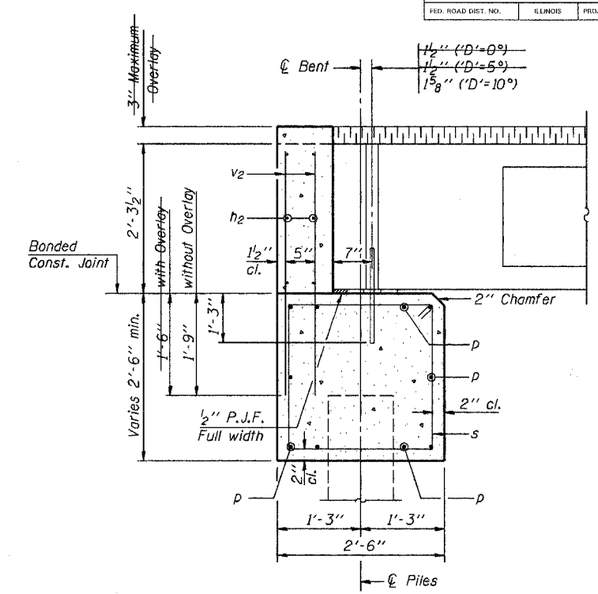

SECTION THRU ABUTMENT

(At Right Angles)

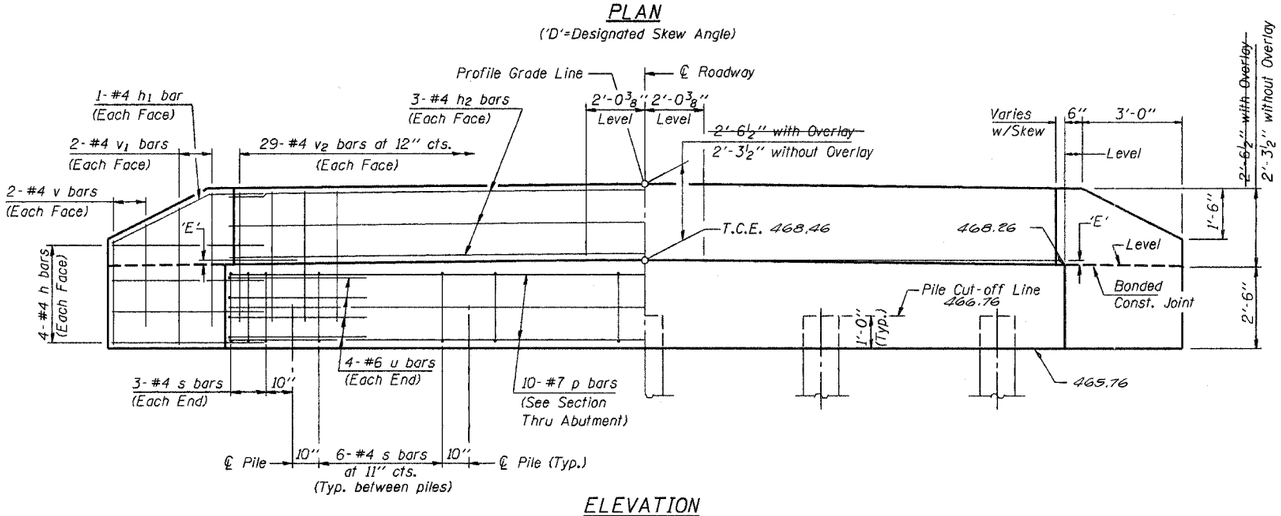

ELEVATION

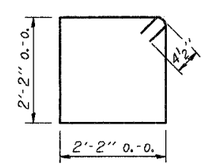

BAR s

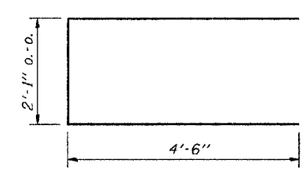

BAR u

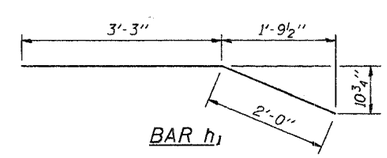

BAR h1

BILL OF MATERIAL FOR ONE ABUTMENT

Bar	No.	Size	Length	Shape
h	16	#4	5'-0"	——
h1	4	#4	5'-3"	⟋
h2	6	#4	28'-10"	——
p	10	#7	28'-10"	——
s	30	#4	9'-5"	□
u	8	#6	11'-1"	⊏
v	8	#4	3'-2"	——
v1	8	#4	4'-2"	——
v2	58	#4	3'-11"	——
Concrete Structures			10.4 Cu. Yds.	
Reinforcement Bars			1290 Lb.	

DIMENSION 'E'

GRADE	'D'=0°		'D'=5°		'D'=10°	
	UPGRADE END	DOWNGRADE END	UPGRADE END	DOWNGRADE END	UPGRADE END	DOWNGRADE END
0%	2 3/8"	2 3/8"	2 3/8"	2 3/8"	2 3/8"	2 3/8"
Over 0% to 1%	2 3/8"	2 3/8"	2 1/4"	2 3/8"	2 1/8"	2 1/2"
Over 1% to 2%	2 3/8"	2 3/8"	2 1/8"	2 1/2"	1 7/8"	2 3/4"
Over 2% to 3%	2 3/8"	2 3/8"	2"	2 5/8"	1 5/8"	3"
Over 3% to 4%	2 3/8"	2 3/8"	1 7/8"	2 3/4"	1 3/8"	3 1/4"

NOTES

1. The Backwall and the portion of the Wingwalls above the bonded construction joint shall be cast against the in-place beam.
2. Reinforcement bars shall conform to the requirements of A.A.S.H.T.O. M-31 or M-322, Grade 60.
3. Space reinforcement in cap to miss anchor bolts.

MAXIMUM PILE LOADS

SPAN	TONS
40'	29
50'	33
60'	37

DESIGN STRESSES

f'c = 3,500 psi
fy = 60,000 psi

Illinois Department of Transportation

PASSED APRIL 4, 2005
Thomas J. Domagalski
Engineer of Bridge Design
APPROVED APRIL 4, 2005
Ralph E. Anderson
Engineer of Bridges and Structures

1961-1-1 D7/SSI

P.P.C. DECK BEAMS
PILE BENT ABUTMENT

28' RDWY. | 27" BMS. | 'D'=0°, 5° OR 10°

STANDARD CA-2827-10