CONTRACT NO. 95511

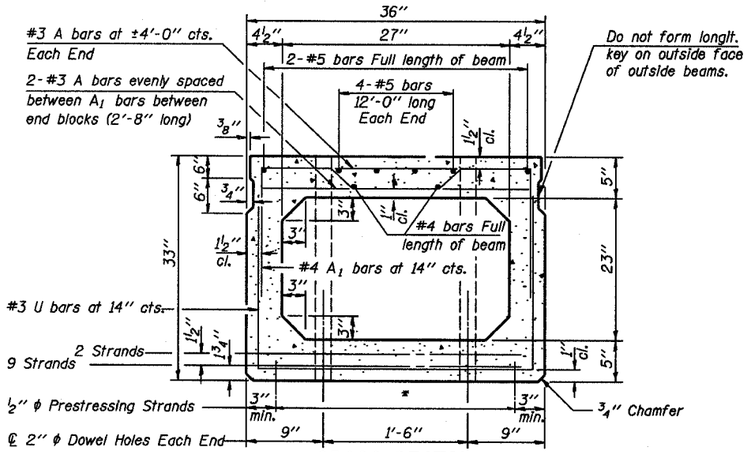

CROSS SECTION
(60' SPAN)

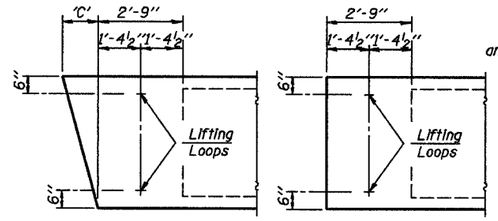

END BLOCK DETAILS

Each beam shall have four Lifting Loops, two at each end of beam cast in locations shown above. Loops shall be burned off after beams have been erected.

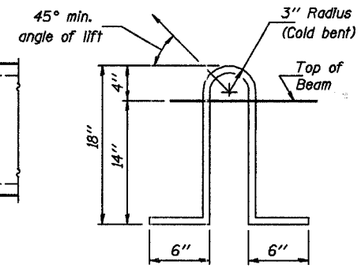

LIFTING LOOP DETAIL

Lifting loops shall be 3, ½"ϕ-270 ksi strands, as shown. Alternate approved lifting devices are also acceptable.

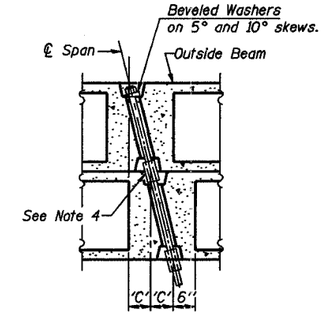

PARTIAL PLAN
TRANSVERSE TIE ASSEMBLY
('D'=0°, 5° and 10°)

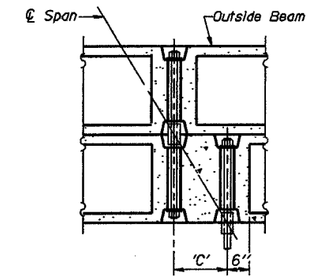

PARTIAL PLAN
TRANSVERSE TIE ASSEMBLY
('D'=15°, 20°, 25° and 30°)

DIMENSION 'C'

Skew Angle 'D'	0°	5°	10°	15°	20°	25°	30°
Dimension 'C' (Inches)	0	3⅛	6⅜	9⅝	13⅛	16¾	20¾

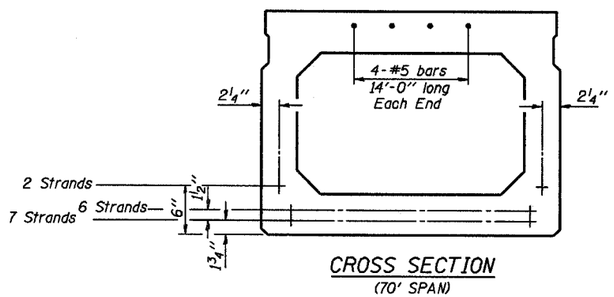

CROSS SECTION
(70' SPAN)

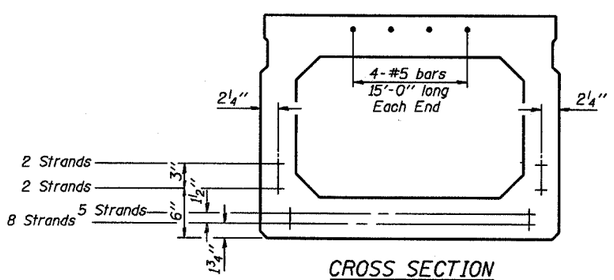

CROSS SECTION
(75' SPAN)

* TRANSVERSE STRAND PLACEMENT GUIDELINES

1. Place strands symmetrically about centerline of beam.
2. The minimum distance from center to center of strands in all directions shall be 2".
3. The minimum clearance from strand to dowel hole shall be ½".
4. The minimum clearance from strand to void shall be 1½".

Vertical placement of strands shall not be adjusted to satisfy the above guidelines.

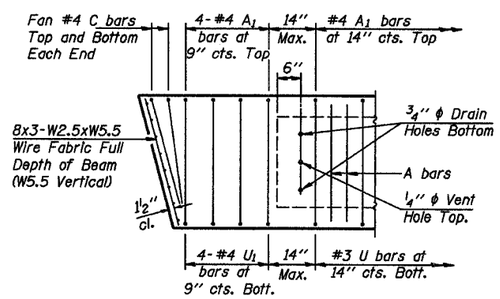

END REINFORCEMENT
(SKEWED)

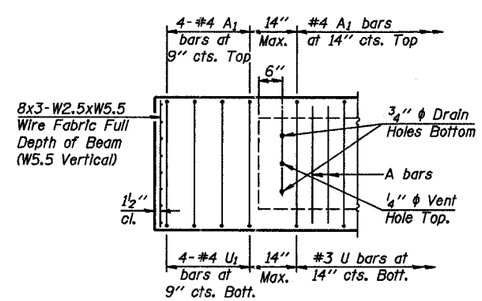

END REINFORCEMENT
(RIGHT ANGLE)

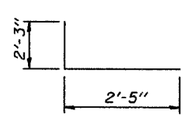

BAR C**

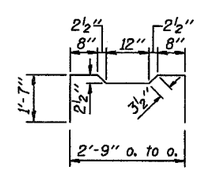

BAR A1

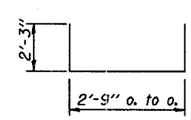

BARS U & U1

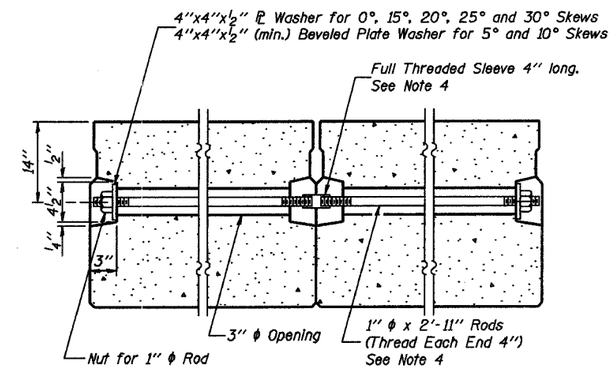

SECTION ALONG TRANSVERSE TIE ASSEMBLY

NOTES

1. Prestressing steel shall be uncoated high strength, low relaxation 7-wire strand, Grade 270.
2. The nominal diameter shall be ½" and the nominal cross-sectional area shall be 0.153 square inches.
3. Reinforcement bars shall conform to the requirements of AASHTO M-31 or M-322, Grade 60.
4. On 0°, 5° and 10° skews, alternate appoved transverse tie rods of increased segmental length are acceptable.
5. Rail Post anchor devices shall be cast into outside beam as elsewhere specified.
6. When a Waterproofing Membrane System is specified, the top surface of the beams shall be screeded with a straightedge and finished with a hand float. The finished surface shall be free of depressions or high spots with sharp corners and the top edge of keys shall be rounded or chamfered a minimum of ¼".
7. Keyway surfaces shall be cleaned to remove form oil or other bond breaking material prior to shipment of the beams. Cleaning shall be done by sandblasting the keyway areas between the top of the beam and the bottom edge of the key.

NOTE:
The std. reinf. and dimensions shown on the 60' span cross section is typical for all spans, except as shown.

**NOTE:
The following number of C bars shall be used:

Skew	No.
5° and 10°	1
15° and 20°	2
25° and 30°	3

DESIGN STRESSES

f'_c = 5,000 p.s.i.
f'_{ci} = 4,000 p.s.i.
f'_s = 270,000 p.s.i. (½" ϕ Strand)
f_{si} = 201,960 p.s.i. (½" ϕ Strand)
f_y = 60,000 p.s.i.

MIN. BAR LAP

#4 bars = 1'-4"
#5 bars = 1'-8"

Illinois Department of Transportation

PASSED APRIL 4, 2005
Thomas J. Kemmerling
Engineer of Bridge Design
APPROVED APRIL 4, 2005
Ralph E. Anderson
Engineer of Bridges and Structures

ISSUED 4-4-2005

P.P.C. DECK BEAM DETAILS	
27' ROADWAY	33" x 36" BEAMS
STANDARD CB-2733-36	