F.A. RTE.	SECTION	COUNTY	TOTAL SHEETS	SHEET NO.
	06-00026-01-MS	MADISON	43	21

FEDERAL AID PROJECT

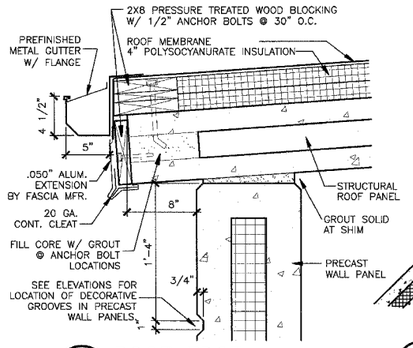

A ROOF EDGE
1-1/2"=1'-0"

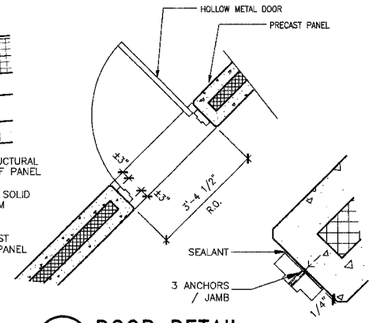

B DOOR DETAIL
1/2"=1'-0"

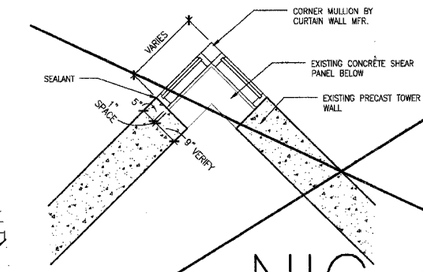

C CURTAIN WALL DTL
1/2"=1'-0"

NIC

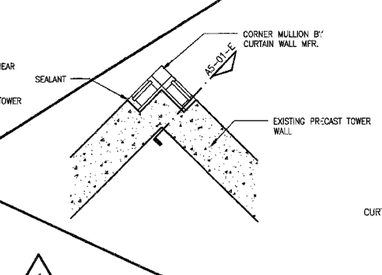

D CURTAIN WALL DETAIL
1/2"=1'-0"

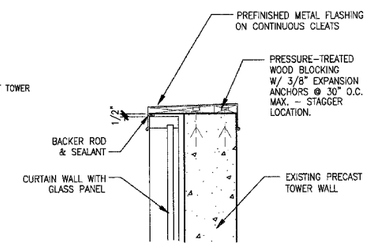

E CURTAIN WALL/PARAPET DTL
1"=1'-0"

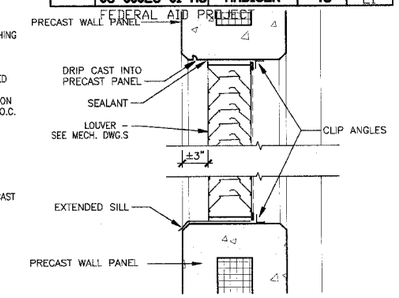

X LOUVER DETAIL
1-1/2"=1'-0"

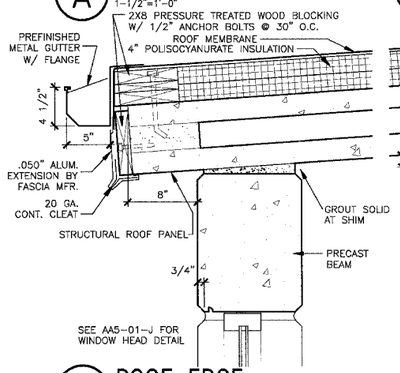

F ROOF EDGE
1-1/2"=1'-0"

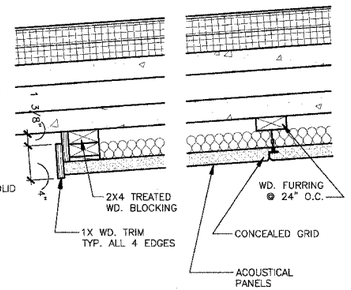

G ACOUSTICAL CEILING
1-1/2"=1'-0"

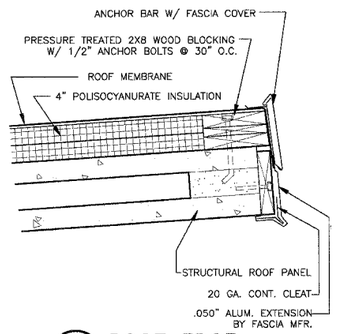

H ROOF EDGE
1-1/2"=1'-0"

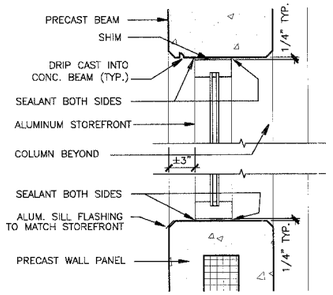

J WINDOW DETAIL
1-1/2"=1'-0"

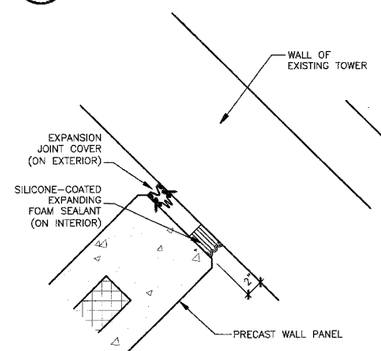

K EXPANSION JOINT
1-1/2"=1'-0"

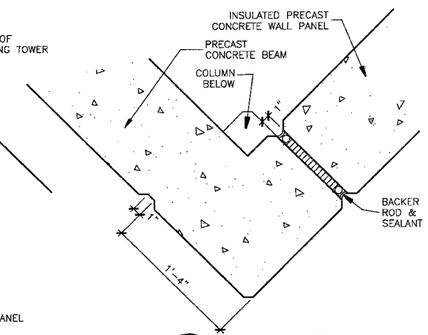

Y PLAN DETAIL
1-1/2"=1'-0"

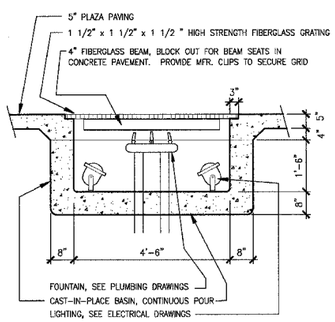

L FOUNTAIN SECTION
1/2"=1'-0"

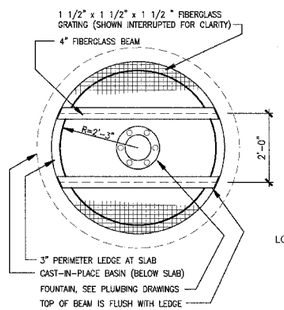

M FOUNTAIN PLAN
1/2"=1'-0"

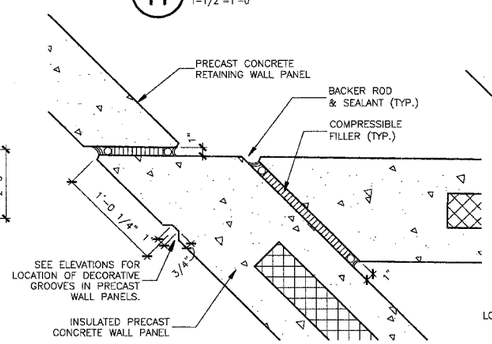

N PLAN DETAIL
1-1/2"=1'-0"

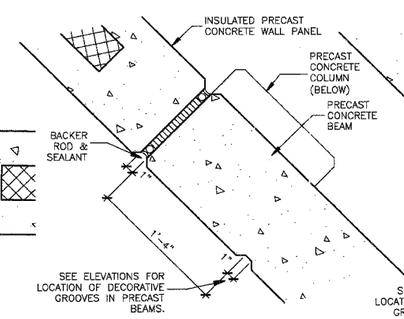

P PLAN DETAIL
1-1/2"=1'-0"

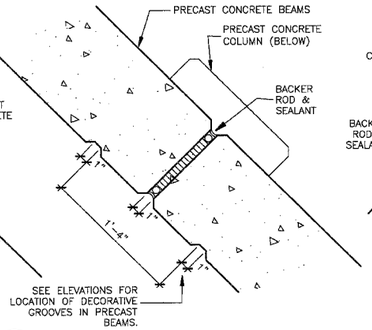

Q PLAN DETAIL
1-1/2"=1'-0"

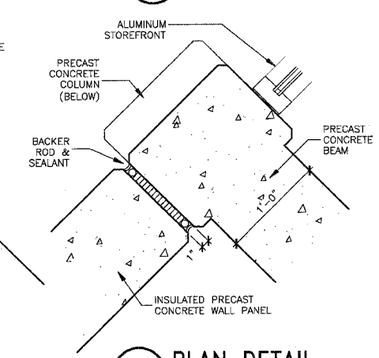

Z PLAN DETAIL
1-1/2"=1'-0"

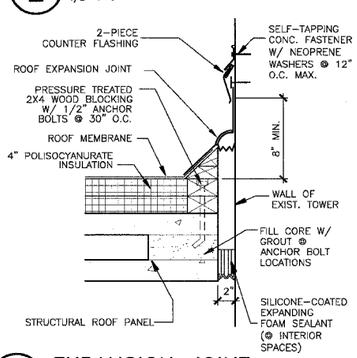

R EXPANSION JOINT
1-1/2"=1'-0"

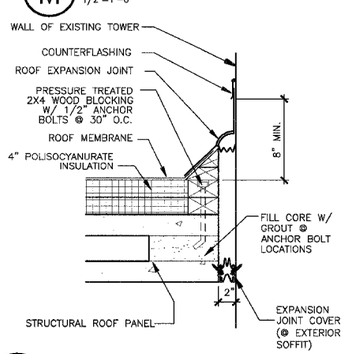

S EXPANSION JOINT
1-1/2"=1'-0"

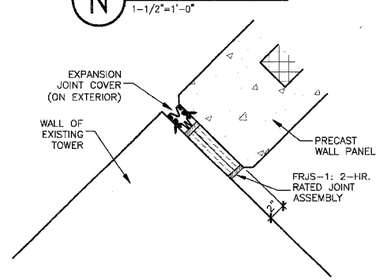

T RATED EXPANSION JOINT
1-1/2"=1'-0"

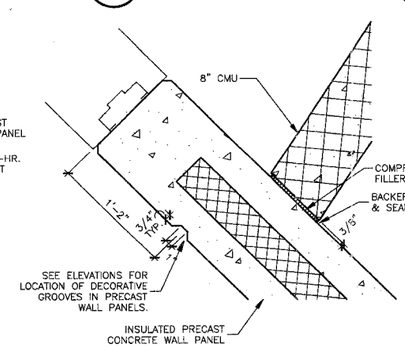

U PLAN DETAIL
1-1/2"=1'-0"

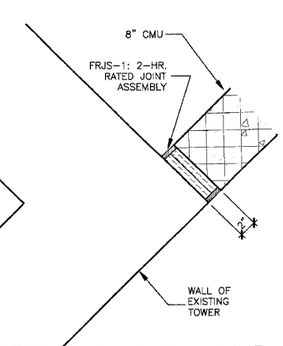

V RATED EXPANSION JOINT
1-1/2"=1'-0"

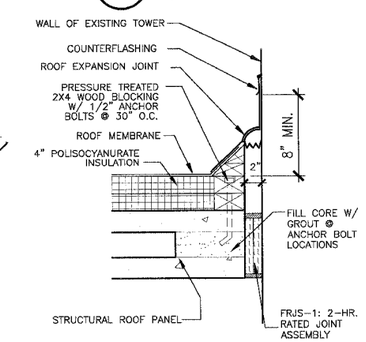

W RATED EXPANSION JOINT
1-1/2"=1'-0"

Drawing Stamp Information

KAI
211 N. Broadway
Suite 1600
St. Louis, MO
63102
(314) 241-9188
FAX (314) 241-0125

PHASE 2A
LEWIS AND CLARK MEMORIAL TOWER
VILLAGE OF HARTFORD, ILLINOIS
HARTFORD, ILLINOIS 62049

SHEET TITLE:
DETAILS

REV. NO.	REMARKS	DATE
1	IDOT REV.	11/8/06

KENNEDY PROJECT NO
KAI# 10-02048

ISSUE DATE
12-JULY-05

SHEET NO
AA5-01

©2005 KENNEDY ASSOCIATES INCORPORATED