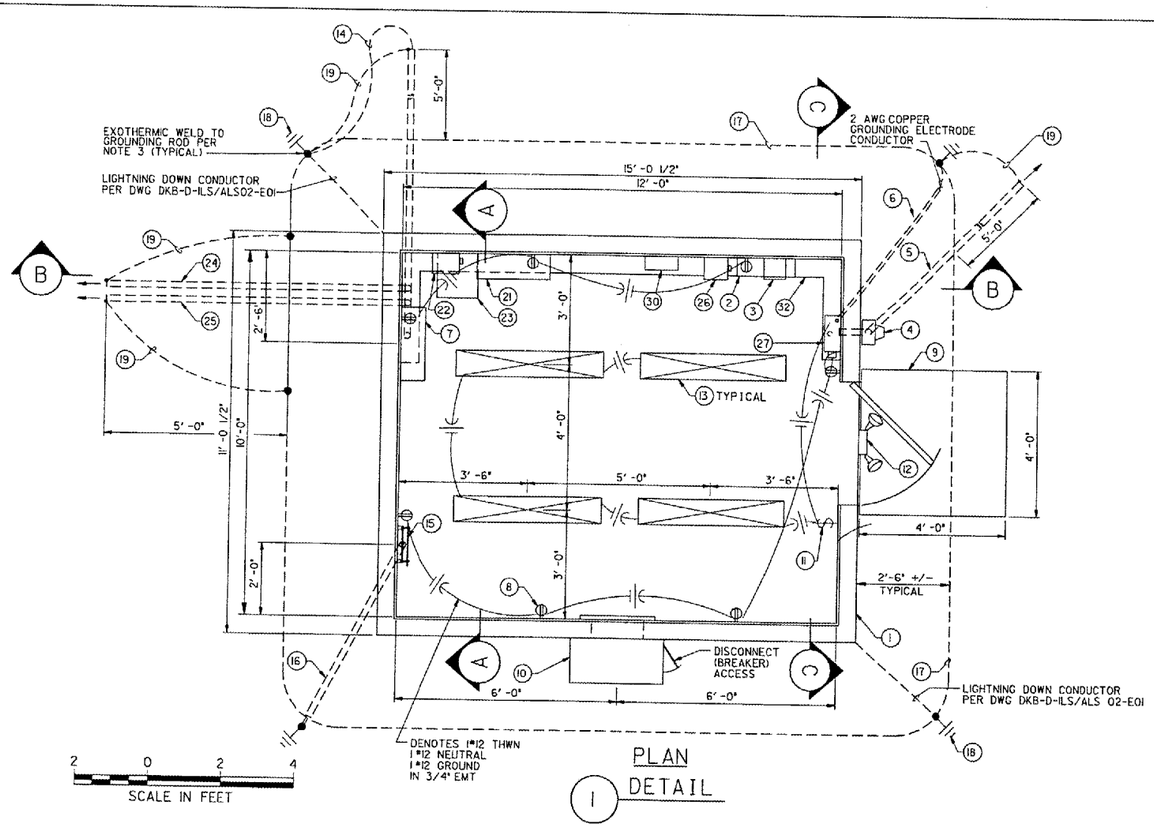

PLAN DETAIL

1

NUMBERED LEGEND:

(F&I = FURNISH & INSTALL. I = INSTALL. BO = INSTALLED BY FAA INSTALLATION PERSONNEL

F&I (1) REINFORCED CONCRETE FOUNDATION AND WOOD FRAME EQUIPMENT SHELTER PER DWG DKB-D-MALSR02-A01.

F&I (2) POWER PANEL, SQUARE "D" CAT NO NQOD30L225CU IN NEMA 1ENCLOSURE WITH BOLT-ON BREAKERS. SEE DRAWING DKB-D-MALSR02-E06 FOR BREAKER ASSIGNMENTS.

F&I (3) AC SURGE ARRESTER, LIGHTING PROTECTION CORP. CAT. NO. LPC 2020-8U-G.

F&I (4) ELECTRIC POWER METER. SEE SITE PLAN FOR POWER PROVISION DETAILS.

F&I (5) 3-1/C # 3/0 TYPE U.S.E. POWER CABLES IN 3" GALVANIZED RIGID STEEL CONDUIT. SEE SITE PLAN FOR POWER SOURCE LOCATION AND POWER PROVISION DETAILS.

F&I (6) 1" SCHEDULE 40 PVC CONDUIT WITH #2 BARE STRANDED COPPER GROUNDING CONDUCTOR FROM SERVICE DISCONNECT TO GROUND ROD.

F&I (7) 24" X 24" X 8" CONTROL CABLE JUNCTION BOX, NEMA 1, HOFFMAN A24N24BLP WITH PANEL, HOFFMAN A-24N24MP MEETS SPECIFICATIONS.

F&I (8) DUPLEX RECEPTACLE PER NOTE 1.

F&I (9) 4' X 4' CONCRETE STOOP

F&I (10) HVAC THRU-WALL UNIT. 11,100 BTU A/C, 3.6 KW HEAT. BARD CAT. NO. WA12I-A03EX4XXJ MEETS SPECIFICATIONS. PROVIDE SHOP DRAWINGS FOR SUBSTITUTIONS.

F&I (11) LIGHT SWITCH PER NOTE 1.

F&I (12) SECURITY FLOODLIGHT WITH DIE-CAST METAL LAMP COVERS, 75 W, 120V PAR-38 INCANDESCENT LAMPS (2), PHOTO AND MOTION CONTROLLED, ADJUSTABLE TIME AND SENSITIVITY SETTINGS. REGENT MODEL #SV275RW (WHITE FINISH) BY COOPER LIGHTING PRODUCTS MEETS SPECIFICATIONS.

F&I (13) 4'-LONG 2-LAMP-TUBE FLUORESCENT LIGHT FIXTURE, SURFACE-MOUNTED, 120-VOLT, WITH WRAPAROUND ACRYLIC LENS ENCLOSURE AND TWO 48"-LONG, 32-WATT, T-8 FLUORESCENT LAMP TUBES, TYPE F32. HOLOPHANE MODEL NO. HW-S-M-4-D-S-H71-042-LP-1-1-RIFI MEETS SPECIFICATIONS.

F&I (14) #2/0 GROUNDING CONDUCTOR. GREEN THWN WITH RED STRIPE IN 2" GRS CONDUIT THROUGH FLOOR. CONNECT TO GROUNDING COUNTERPOISE AT GROUNDING ROD USING AN EXOTHERMIC WELD. LEAVE 3' LENGTH OF CONDUCTOR IN CONTROL CABLE JUNCTION BOX FOR TERMINATION BY OTHERS.

F&I (15) MAIN COPPER GROUNDING PLATE WITH PLASTIC COVER. SEE NOTE 4.

F&I (16) 2" PVC CONDUIT WITH TWO #4/0 THWN GROUNDING CONDUCTORS FROM MAIN GROUNDING PLATE. SEE NOTE 3.

F&I (17) #4/0 BARE COPPER COUNTERPOISE 4'-0" BELOW GRADE. SEE NOTE 3.

F&I (18) 3/4" X 10' COPPERCLAD GROUNDING ROD.

F&I (19) #6 BARE COPPER GROUNDING CONDUCTOR.

F&I (20) EXPANSION COUPLING, 4" MIN TRAVEL. APPLETON EXPANSION COUPLINGS MEET SPECIFICATIONS

I (21) MALSR POWER AND CONTROL CABINET

F&I (22) MALS DISCONNECT SWITCH

I (23) MALSR POWER TRANSFORMER

F&I (24) MALS POWER CABLES IN 3" GRS CONDUIT

F&I (25) RAIL POWER AND CONTROL CABLES IN 2" GRS CONDUIT

F&I (26) MALSR DISCONNECT SWITCH

F&I (27) SERVICE DISCONNECT SWITCH

I (28) (RESERVED)

I (29) (RESERVED)

I (30) AIR-TO-GROUND RADIO RECEIVER/CONTROLLER

I (31) AIR-TO-GROUND RADIO RECEIVER/CONTROLLER ANTENNA

NOTES:

1. LIGHT FIXTURES, POWER PANEL, SURGE ARRESTER, RECEPTACLES, AND LIGHT SWITCHES SHALL BE SURFACE MOUNTED. CONDUIT RUNS SHALL BE INSTALLED PLUMB OR HORIZONTAL WITH MINIMUM NUMBER OF BENDS.
2. EXTERIOR WALL PENETRATIONS SHALL BE SEALED WITH WATERPROOF SILICONE CAULK.
3. ALL GROUNDING CONDUCTORS AND GROUND RODS SHALL BE ATTACHED TO COUNTERPOISE USING EXOTHERMIC WELDS PER SPECIFICATIONS.
4. SEE DWG ST-D-1988B (DKB-D-ILS/ALS02-E01) FOR GROUNDING PLATE INSTALLATION DETAILS.

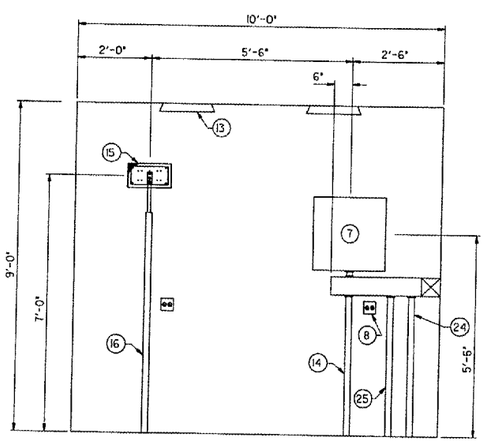

REAR WALL INTERIOR ELEVATION

A SECTION

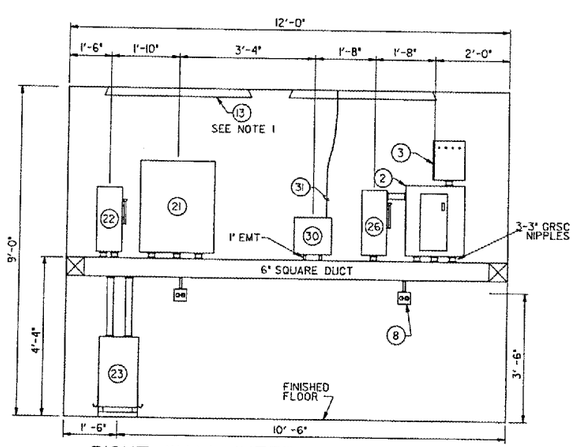

RIGHT WALL INTERIOR ELEVATION

B SECTION

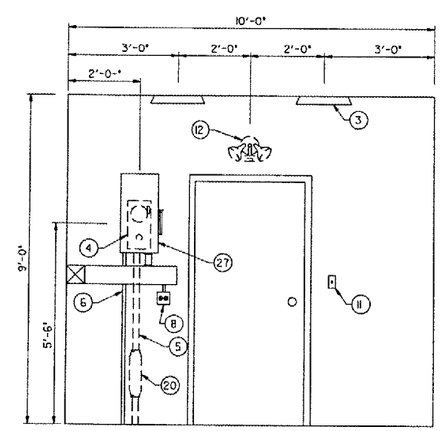

FRONT WALL INTERIOR ELEVATION

C SECTION

MASTER FILE: 10' X 12' WOOD FRAME MALSR SHELTER FLOOR PLAN.DGN

DEPARTMENT OF TRANSPORTATION
FEDERAL AVIATION ADMINISTRATION
GREAT LAKES REGION — CHICAGO, ILLINOIS

MALSR

FLOOR PLAN AND INTERIOR ELEVATIONS
10' X 12' WOOD FRAME EQUIPMENT SHELTER
RUNWAY 02

DEKALB — DEKALB TAYLOR MUNICIPAL AIRPORT — IL

DATE	DESCRIPTION	JCH	REDLINE DATE	APVD

REVIEWED BY	SUBMITTED BY	APPROVED BY
	PROJ. ENGR.	PLATFORM MGR.
	DATE TAD	DATE JCH
	DRAWN TAD	ISSUED BY CHICAGO NAS IMPLEMENTATION CENTER
	DRAWN EGS	DRAWING NO. DKB-D-LOC-MALSR-A02 REV

PLOT DATE = 03\29\2007, 01:21 PM
FILE NAME = I:\Airports\Dekalb\883-06ELEC\Airport\Sheets\Micro-Station Sheets\18' X 12' WOOD FRAME MALSR SHELTER FLOOR PLAN.dgn
PLOT SCALE = 4:1 3/4 "=" / IN.
USER NAME = kdw